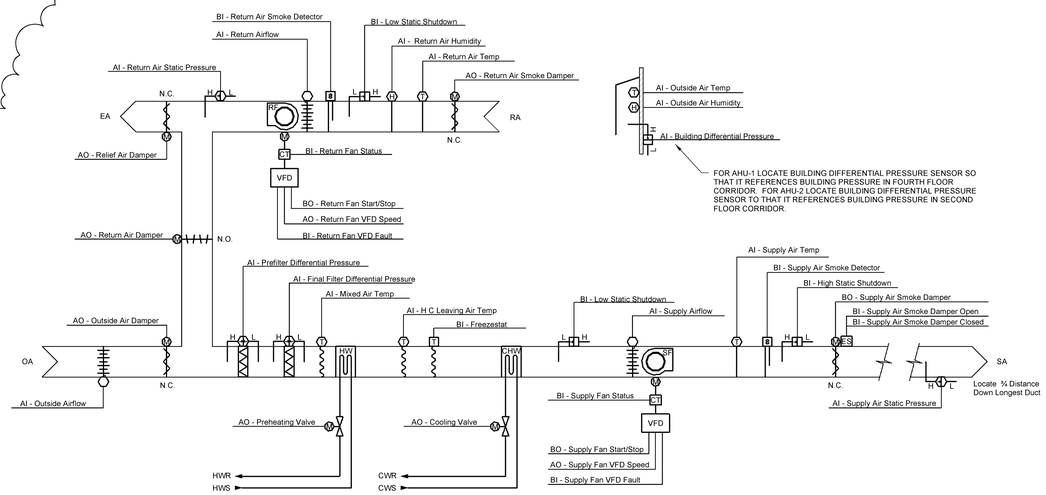

1 AHU - 1 & AHU-2 CONTROL DIAGRAM
N.T.S.

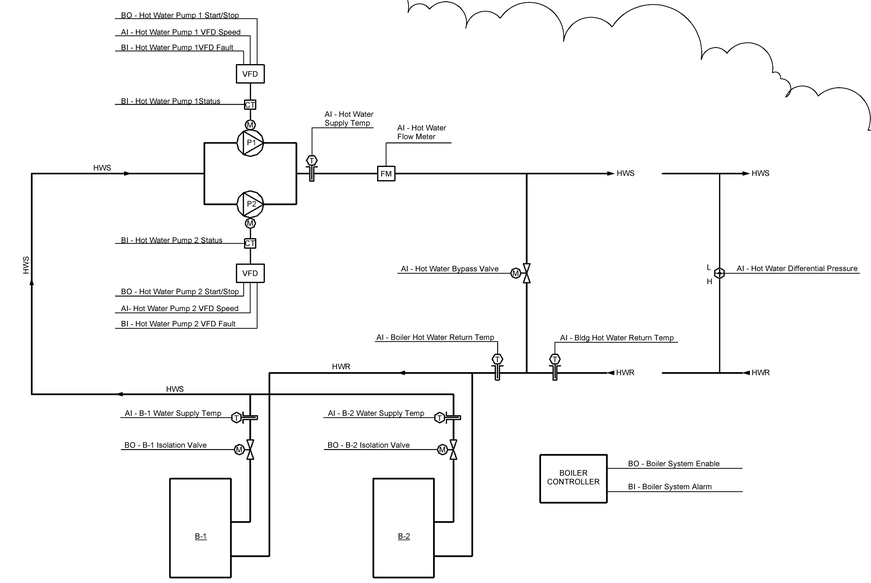

2 HEATING SYSTEM CONTROL DIAGRAM
N.T.S.

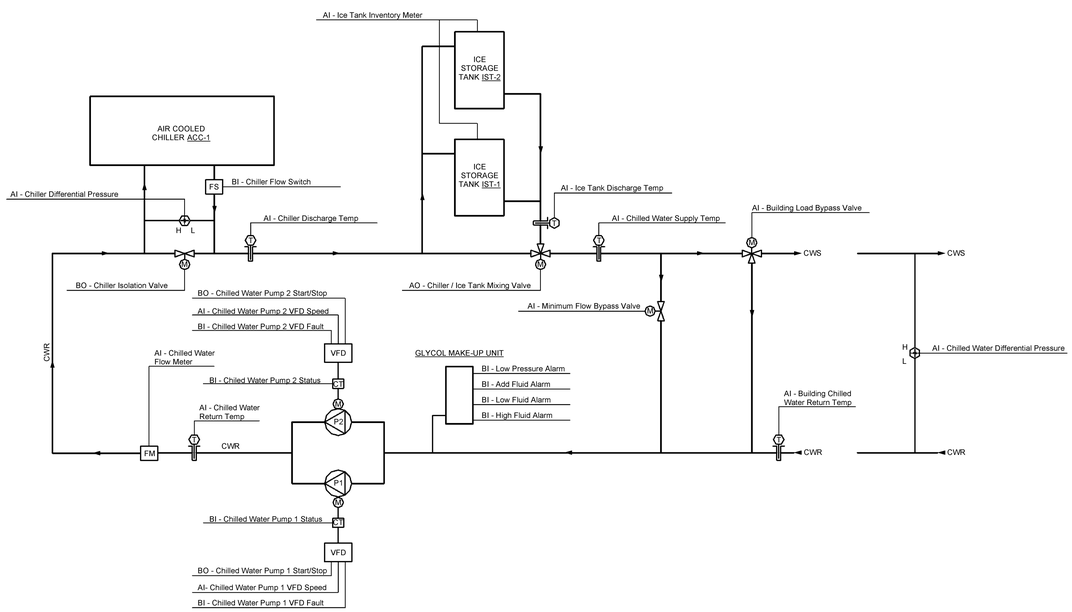

3 CHILLED WATER SYSTEM CONTROL DIAGRAM
N.T.S.

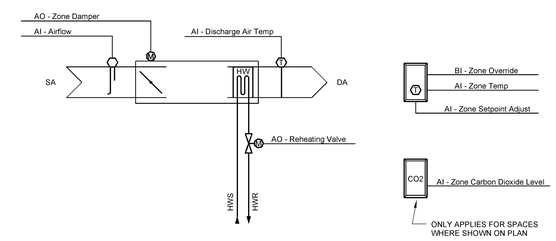

4 VAV BOX CONTROL DIAGRAM
N.T.S.

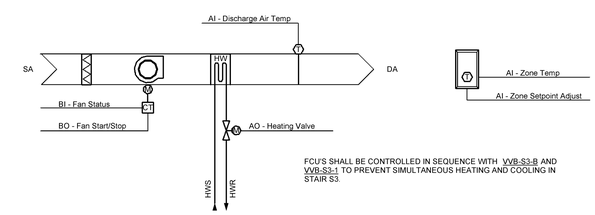

5 FCU-1 & FCU-2 CONTROL DIAGRAM
N.T.S.

CLARKSBURG STATE OFFICE BUILDING
FOR
GENERAL SERVICES DIVISION
153 WEST MAIN STREET

H.F. LENZ COMPANY
1407 Scalp Avenue
Johnstown, PA 15904-3329
Phone: 814-269-9301
FAX: 814-269-9300
www.hflenz.com

JOEL C. SHUMAKER REGISTERED PROFESSIONAL ENGINEER 14491 STATE OF PENNSYLVANIA

COPYRIGHT 2013 ALPHA ASSOCIATES, INC. ALL RIGHTS RESERVED

REVISIONS

No.	ITEM	DATE
1		2/7/2014

Alpha ARCHITECTS ENGINEERS
ALPHA ASSOCIATES, INC.
209 PRAIRIE AVENUE
MORGANTOWN, WV 26501
PHONE/FAX: 304-296-8216
TOLL FREE: 800-440-8216
www.thinkALPHAfirst.com

ISSUED FOR BIDDING

PROJ. NO.: 0810123.05
DATE: NOVEMBER 19, 2013
SHEET NO.:
M502

CONTROL DIAGRAMS

C:\Revit_User_Local\MEP-2008-0516x03-2013_jwelland.rvt
2/7/2014 2:30:33 PM