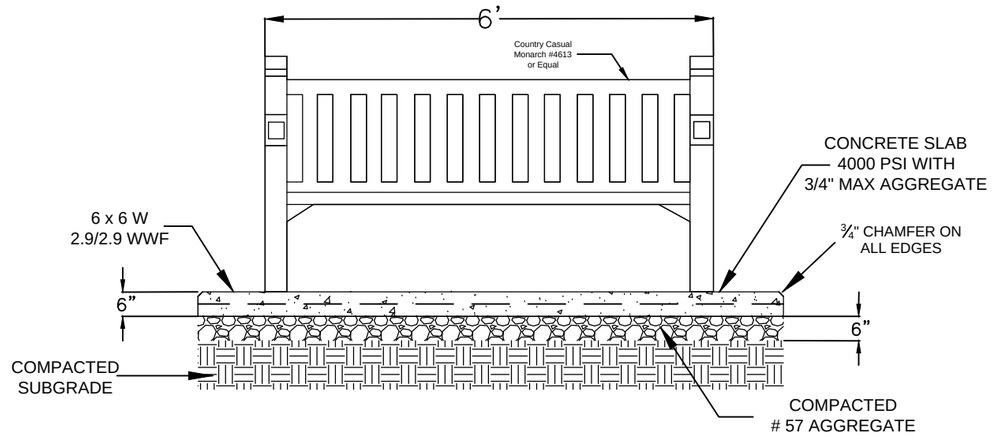

1 Bench Detail

N.T.S

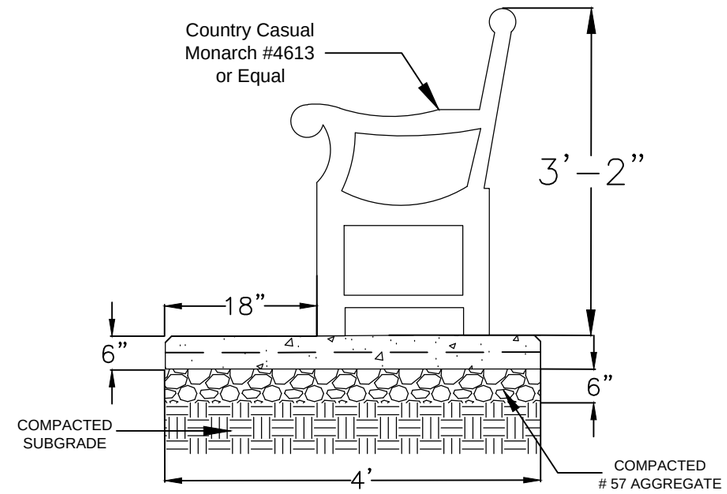

1 Bench Detail

N.T.S

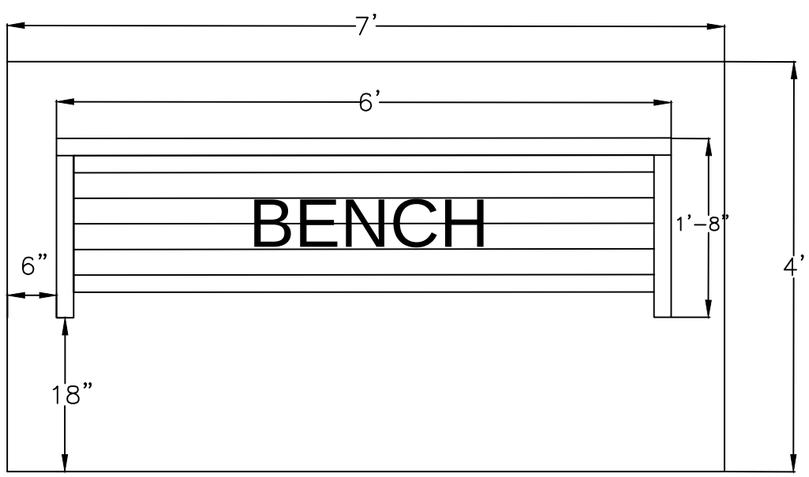

2 Bench Plan View

N.T.S

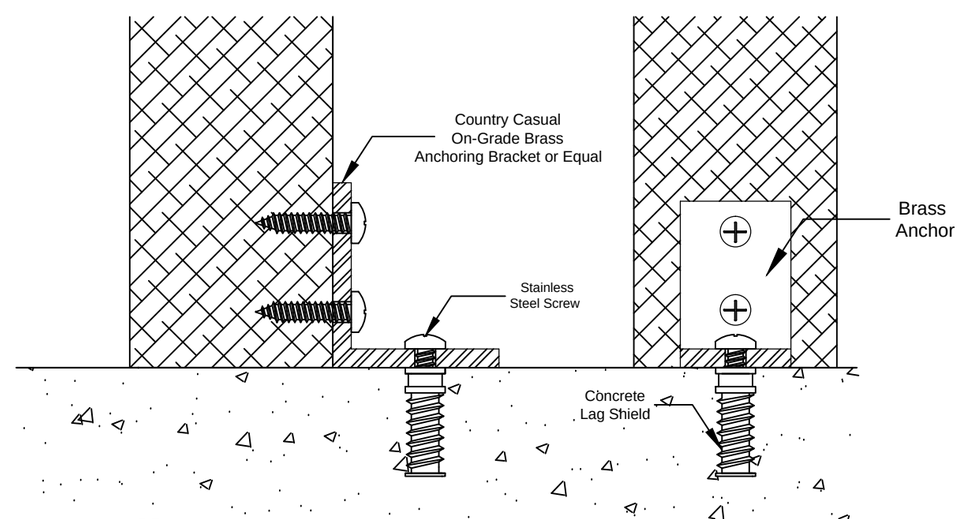

3 BenchBracket Detail

N.T.S

Notes:

CONTRACTOR SHALL FIELD VERIFY ALL DIMENSIONS. ANY DISCREPENCIES SHALL BE BROUGHT TO THE PROJECT MANAGER / ARCHITECT ATTENTION PRIOR TO CONSTRUCTION.

BLDG. 5, 6 and 7 Park
CAPITOL COMPLEX
BUILDING #5, 6 AND 7
1900 KANAWHA BOULEVARD EAST
CHARLESTON, WEST VIRGINIA 25305

REVISIONS

DATE	NO.

SEAL

REVISED

DATE	SCALE
08/12/10	NOTED
DRAWN BY BMG	CHK. BY

DRAWING NUMBER

C2.1