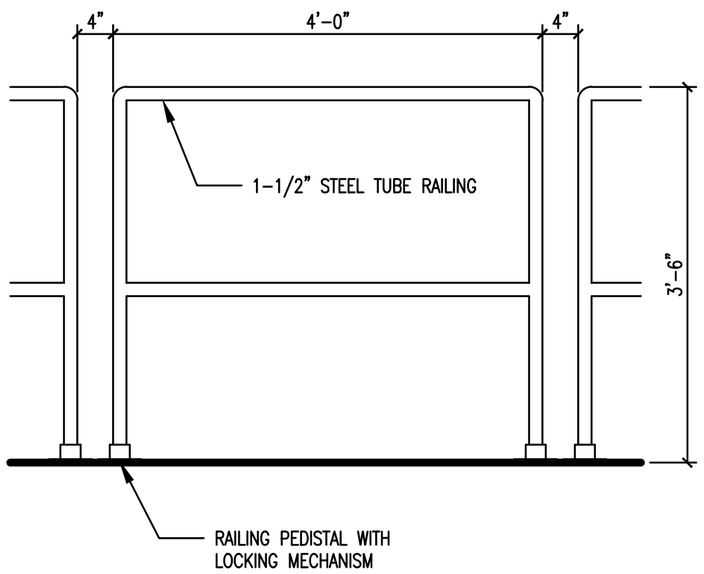

1 REMOVEABLE RAILING DETAIL
3/4" = 1'-0"

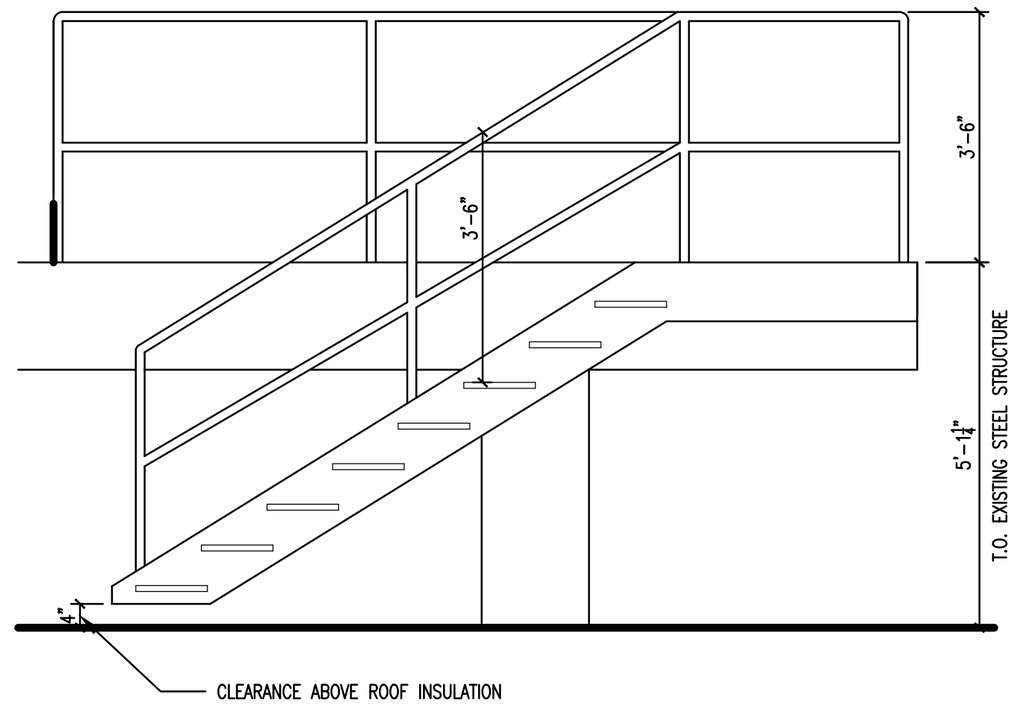

2 STAIR DETAIL
1/2" = 1'-0"

STATE OF WEST VIRGINIA
MONTANI SEMPER LIBERI

Building 11
Cooling Tower Platform
CAPITOL COMPLEX
218 CALIFORNIA AVENUE
CHARLESTON, WEST VIRGINIA 25305

REVISIONS	
DATE	NO.

SEAL

REVISED

DATE	SCALE
DRAWN BY	CHK. BY

DRAWING NUMBER

A3