State of West Virginia
Department of Administration
Purchasing Division
2019 Washington Street East
Post Office Box 50130
Charleston, WV 25305-0130

# Request for Quotation

| RFQ NUMBER | PAGE |
|---|---|
| 07110100 | 1 |

ADDRESS CORRESPONDENCE TO ATTENTION OF:
BUYER 33
304-558-2402

VENDOR
RFQ COPY
TYPE NAME/ADDRESS HERE

SHIP TO
DIVISION OF HIGHWAYS
DISTRICT SEVEN
STORAGE YARD
1205 US HWY 19 SOUTH
WESTON, WV
26452 304-269-0475

| DATE PRINTED | TERMS OF SALE | SHIP VIA | F.O.B. | FREIGHT TERMS |
|---|---|---|---|---|
| 09/28/2010 | | | | |

BID OPENING DATE: 10/20/2010 BID OPENING TIME 01:30PM

| LINE | QUANTITY | UOP | CAT. NO. | ITEM NUMBER | UNIT PRICE | AMOUNT |
|---|---|---|---|---|---|---|
| 0001 | 1 | LS | | 210-16 | | |

BOX BEAMS

TO PROVIDE CONCRETE BOX BEAMS FOR THE MAXWELL RUN WIDENING, PROJECT #S321-19-27.22 FOR THE WEST VIRGINIA DIVISION OF HIGHWAYS PER THE ATTACHED SPECIFICATIONS. ALL MATERIALS SHALL BE SHIPPED TO BRIDGE SITE AS SHOWN ON SHEET 1 OF THE PLANS.
EXHIBIT 10

REQUISITION NO.: .....

ADDENDUM ACKNOWLEDGEMENT

I HEREBY ACKNOWLEDGE RECEIPT OF THE FOLLOWING CHECKED ADDENDUM(S) AND HAVE MADE THE NECESSARY REVISIONS TO MY PROPOSAL, PLANS AND/OR SPECIFICATION, ETC.

ADDENDUM NO.'S:

NO. 1 .....

NO. 2 .....

NO. 3 .....

NO. 4 .....

NO. 5 .....

I UNDERSTAND THAT FAILURE TO CONFIRM THE RECEIPT OF THE ADDENDUM(S) MAY BE CAUSE FOR REJECTION OF BIDS.

SEE REVERSE SIDE FOR TERMS AND CONDITIONS

| SIGNATURE | TELEPHONE | DATE |
|---|---|---|
| TITLE | FEIN | ADDRESS CHANGES TO BE NOTED ABOVE |

WHEN RESPONDING TO RFQ, INSERT NAME AND ADDRESS IN SPACE ABOVE LABELED 'VENDOR'

# GENERAL TERMS & CONDITIONS
# REQUEST FOR QUOTATION (RFQ) AND REQUEST FOR PROPOSAL (RFP)

**1.** Awards will be made in the best interest of the State of West Virginia.

**2.** The State may accept or reject in part, or in whole, any bid.

**3.** Prior to any award, the apparent successful vendor must be properly registered with the Purchasing Division and have paid the required $125 fee.

**4.** All services performed or goods delivered under State Purchase Order/Contracts are to be continued for the term of the Purchase Order/Contracts, contingent upon funds being appropriated by the Legislature or otherwise being made available. In the event funds are not appropriated or otherwise available for these services or goods this Purchase Order/Contract becomes void and of no effect after June 30.

**5.** Payment may only be made after the delivery and acceptance of goods or services.

**6.** Interest may be paid for late payment in accordance with the ***West Virginia Code.***

**7.** Vendor preference will be granted upon written request in accordance with the ***West Virginia Code.***

**8.** The State of West Virginia is exempt from federal and state taxes and will not pay or reimburse such taxes.

**9.** The Director of Purchasing may cancel any Purchase Order/Contract upon 30 days written notice to the seller.

**10.** The laws of the State of West Virginia and the ***Legislative Rules*** of the Purchasing Division shall govern the purchasing process.

**11.** Any reference to automatic renewal is hereby deleted. The Contract may be renewed only upon mutual written agreement of the parties.

**12. BANKRUPTCY:** In the event the vendor/contractor files for bankruptcy protection, the State may deem this contract null and void, and terminate such contract without further order.

**13. HIPAA BUSINESS ASSOCIATE ADDENDUM:** The West Virginia State Government HIPAA Business Associate Addendum (BAA), approved by the Attorney General, is available online at **www.state.wv.us/admin/purchase/vrc/hipaa.htm** and is hereby made part of the agreement. Provided that the Agency meets the definition of a Cover Entity (45 CFR §160.103) and will be disclosing Protected Health Information (45 CFR §160.103) to the vendor.

**14. CONFIDENTIALITY:** The vendor agrees that he or she will not disclose to anyone, directly or indirectly, any such personally identifiable information or other confidential information gained from the agency, unless the individual who is the subject of the information consents to the disclosure in writing or the disclosure is made pursuant to the agency's policies, procedures, and rules. Vendor further agrees to comply with the Confidentiality Policies and Information Security Accountability Requirements, set forth in http://www.state.wv.us/admin/purchase/privacy/noticeConfidentiality.pdf.

**15. LICENSING:** Vendors must be licensed and in good standing in accordance with any and all state and local laws and requirements by any state or local agency of West Virginia, including, but not limited to, the West Virginia Secretary of State's Office, the West Virginia Tax Department, and the West Virginia Insurance Commission. The vendor must provide all necessary releases to obtain information to enable the director or spending unit to verify that the vendor is licensed and in good standing with the above entities.

**16. ANTITRUST:** In submitting a bid to any agency for the State of West Virginia, the bidder offers and agrees that if the bid is accepted the bidder will convey, sell, assign or transfer to the State of West Virginia all rights, title and interest in and to all causes of action it may now or hereafter acquire under the antitrust laws of the United States and the State of West Virginia for price fixing and/or unreasonable restraints of trade relating to the particular commodities or services purchased or acquired by the State of West Virginia. Such assignment shall be made and become effective at the time the purchasing agency tenders the initial payment to the bidder.

I certify that this bid is made without prior understanding, agreement, or connection with any corporation, firm, limited liability company, partnership, or person or entity submitting a bid for the same material, supplies, equipment or services and is in all respects fair and without collusion or Fraud. I further certify that I am authorized to sign the certification on behalf of the bidder or this bid.

---

## INSTRUCTIONS TO BIDDERS

**1.** Use the quotation forms provided by the Purchasing Division. Complete all sections of the quotation form.

**2.** Items offered must be in compliance with the specifications. Any deviation from the specifications must be clearly indicated by the bidder. Alternates offered by the bidder as **EQUAL** to the specifications must be clearly defined. A bidder offering an alternate should attach complete specifications and literature to the bid. The Purchasing Division may waive minor deviations to specifications.

**3.** Unit prices shall prevail in case of discrepancy. All quotations are considered F.O.B. destination unless alternate shipping terms are clearly identified in the quotation.

**4.** All quotations must be delivered by the bidder to the office listed below prior to the date and time of the bid opening. Failure of the bidder to deliver the quotations on time will result in bid disqualifications: Department of Administration, Purchasing Division, 2019 Washington Street East, P.O. Box 50130, Charleston, WV 25305-0130

**5.** Communication during the solicitation, bid, evaluation or award periods, except through the Purchasing Division, is strictly prohibited (W.Va. C.S.R. §148-1-6.6).

State of West Virginia
Department of Administration
Purchasing Division
2019 Washington Street East
Post Office Box 50130
Charleston, WV 25305-0130

# Request for Quotation

| RFQ NUMBER | PAGE |
|---|---|
| 07110100 | 2 |

ADDRESS CORRESPONDENCE TO ATTENTION OF:

BUYER 33
304-558-2402

VENDOR

RFQ COPY
TYPE NAME/ADDRESS HERE

SHIP TO

DIVISION OF HIGHWAYS
DISTRICT SEVEN
STORAGE YARD
1205 US HWY 19 SOUTH
WESTON, WV
26452 304-269-0475

| DATE PRINTED | TERMS OF SALE | SHIP VIA | F.O.B. | FREIGHT TERMS |
|---|---|---|---|---|
| 09/28/2010 | | | | |

BID OPENING DATE: 10/20/2010 BID OPENING TIME 01:30PM

| LINE | QUANTITY | UOP | CAT. NO. | ITEM NUMBER | UNIT PRICE | AMOUNT |
|---|---|---|---|---|---|---|

VENDOR MUST CLEARLY UNDERSTAND THAT ANY VERBAL REPRESENTATION MADE OR ASSUMED TO BE MADE DURING ANY ORAL DISCUSSION HELD BETWEEN VENDOR'S REPRESENTATIVES AND ANY STATE PERSONNEL IS NOT BINDING. ONLY THE INFORMATION ISSUED IN WRITING AND ADDED TO THE SPECIFICATIONS BY AN OFFICIAL ADDENDUM IS BINDING.

.....
SIGNATURE

.....
COMPANY

.....
DATE

NOTE: THIS ADDENDUM ACKNOWLEDGEMENT SHOULD BE SUBMITTED WITH THE BID.

REV. 09/21/2009

NOTICE

A SIGNED BID MUST BE SUBMITTED TO:

DEPARTMENT OF ADMINISTRATION
PURCHASING DIVISION
BUILDING 15
2019 WASHINGTON STREET, EAST
CHARLESTON, WV 25305-0130

SEE REVERSE SIDE FOR TERMS AND CONDITIONS

| SIGNATURE | TELEPHONE | DATE |
|---|---|---|
| TITLE | FEIN | ADDRESS CHANGES TO BE NOTED ABOVE |

WHEN RESPONDING TO RFQ, INSERT NAME AND ADDRESS IN SPACE ABOVE LABELED 'VENDOR'

State of West Virginia
Department of Administration
Purchasing Division
2019 Washington Street East
Post Office Box 50130
Charleston, WV 25305-0130

# Request for Quotation

| RFQ NUMBER | PAGE |
|---|---|
| 07110100 | 3 |

ADDRESS CORRESPONDENCE TO ATTENTION OF:
BUYER 33
304-558-2402

VENDOR
RFQ COPY
TYPE NAME/ADDRESS HERE

SHIP TO
DIVISION OF HIGHWAYS
DISTRICT SEVEN
STORAGE YARD
1205 US HWY 19 SOUTH
WESTON, WV
26452 304-269-0475

| DATE PRINTED | TERMS OF SALE | SHIP VIA | F.O.B. | FREIGHT TERMS |
|---|---|---|---|---|
| 09/28/2010 | | | | |

BID OPENING DATE: 10/20/2010 BID OPENING TIME 01:30PM

| LINE | QUANTITY | UOP | CAT. NO | ITEM NUMBER | UNIT PRICE | AMOUNT |
|---|---|---|---|---|---|---|
| | THE BID SHOULD CONTAIN THIS INFORMATION ON THE FACE OF THE ENVELOPE OR THE BID MAY NOT BE CONSIDERED: | | | | | |
| | SEALED BID | | | | | |
| | BUYER: | | | 33 | | |
| | RFQ. NO.: | | | 07110100 | | |
| | BID OPENING DATE: | | | 10/20/2010 | | |
| | BID OPENING TIME: | | | 1:30 PM | | |
| | PLEASE PROVIDE A FAX NUMBER IN CASE IT IS NECESSARY TO CONTACT YOU REGARDING YOUR BID: | | | | | |
| | ---------- | | | | | |
| | CONTACT PERSON (PLEASE PRINT CLEARLY): | | | | | |
| | ---------- | | | | | |
| | ****** THIS IS THE END OF RFQ 07110100 ****** | | | | TOTAL: | |

SEE REVERSE SIDE FOR TERMS AND CONDITIONS

| SIGNATURE | TELEPHONE | DATE |
|---|---|---|
| TITLE | FEIN | ADDRESS CHANGES TO BE NOTED ABOVE |

WHEN RESPONDING TO RFQ, INSERT NAME AND ADDRESS IN SPACE ABOVE LABELED 'VENDOR'

| Item No.. | Quantity | | Description | Unit Price | Amount |
|---|---|---|---|---|---|
| 1. | 273 | s.f. | 17" Box Beams (Exterior)<br>2 pieces - 3'0" x 45'6" | _____ | _____ |
| 2. | 8 | ea. | Elastomeric laminated bearing pads<br>B-2 1 13/16" x 4 ¾" x 15 ½" | _____ | _____ |
| 3. | 4 | ea. | Swedged anchor bolt or No. 8 Deformed rebar<br>1" Diam. X 2'0" | _____ | _____ |
| 4. | 4 | ea. | Post tension bearing plate<br>9" x 9" x 1" thick | _____ | _____ |
| 5. | 1.3 | s.f. | 1" thick sponge rubber preformed joint filler or equal (2 layers)<br>1" X4 ¾" x 5" – 8pcs | _____ | _____ |
| 6. | 19.3 | s.f. | 1" thick sponge rubber preformed joint filler or equal (2 layers)<br>1" x 9 5/8" x 3' 0" – 8pcs | _____ | _____ |
| 7. | 18 | l.f. | 1" All thread w/ nuts<br>1" x 4' 6" – 4pcs | _____ | _____ |
| 8. | 4 | ea. | 1" Sponge rubber washer<br>8" x 8" x 1" w/ 3 ½" hole | _____ | _____ |
| 9. | 100 | l.f. | TL-2 Bridge guardrail | _____ | _____ |
| 10. | 14 | ea. | Permanent Guardrail attachment assembly<br>for box beam ( insert and holes ) | _____ | _____ |

TOTAL $_____

## Note:

**14 bridge guardrail posts with hardware, and 100 linear feet of guardrail will be attached to beams by fabricator. Shipping constraints may limit the length of attached guardrail. Cost for guardrail attachment shall be included in the unit bid price. Minimum concrete strengths will be 5500 psi at detention and 8000 psi at 28 days. Pre-stressing strands shall be seven-wire uncoated low relaxation oversize strand (AS=0.167 sq.in.) with a minimum tensile strength of 270,000 psi. All lab reports must accompany the shipping ticket. Delivery of 2 beams is expected within 60 days of award.**

Rev. 09/08

State of West Virginia

# VENDOR PREFERENCE CERTIFICATE

Certification and application* is hereby made for Preference in accordance with ***West Virginia Code***, §5A-3-37. (Does not apply to construction contracts). ***West Virginia Code***, §5A-3-37, provides an opportunity for qualifying vendors to request (at the time of bid) preference for their residency status. Such preference is an evaluation method only and will be applied only to the cost bid in accordance with the ***West Virginia Code***. This certificate for application is to be used to request such preference. The Purchasing Division will make the determination of the Resident Vendor Preference, if applicable.

1. **Application is made for 2.5% resident vendor preference for the reason checked:**

____ Bidder is an individual resident vendor and has resided continuously in West Virginia for four (4) years immediately preceding the date of this certification; **or,**

____ Bidder is a partnership, association or corporation resident vendor and has maintained its headquarters or principal place of business continuously in West Virginia for four (4) years immediately preceding the date of this certification; or 80% of the ownership interest of Bidder is held by another individual, partnership, association or corporation resident vendor who has maintained its headquarters or principal place of business continuously in West Virginia for four (4) years immediately preceding the date of this certification; **or,**

____ Bidder is a nonresident vendor which has an affiliate or subsidiary which employs a minimum of one hundred state residents and which has maintained its headquarters or principal place of business within West Virginia continuously for the four (4) years immediately preceding the date of this certification; **or,**

2. **Application is made for 2.5% resident vendor preference for the reason checked:**

____ Bidder is a resident vendor who certifies that, during the life of the contract, on average at least 75% of the employees working on the project being bid are residents of West Virginia who have resided in the state continuously for the two years immediately preceding submission of this bid; **or,**

3. **Application is made for 2.5% resident vendor preference for the reason checked:**

____ Bidder is a nonresident vendor employing a minimum of one hundred state residents or is a nonresident vendor with an affiliate or subsidiary which maintains its headquarters or principal place of business within West Virginia employing a minimum of one hundred state residents who certifies that, during the life of the contract, on average at least 75% of the employees or Bidder's affiliate's or subsidiary's employees are residents of West Virginia who have resided in the state continuously for the two years immediately preceding submission of this bid; **or,**

4. **Application is made for 5% resident vendor preference for the reason checked:**

____ Bidder meets either the requirement of both subdivisions (1) and (2) or subdivision (1) and (3) as stated above; **or,**

5. **Application is made for 3.5% resident vendor preference who is a veteran for the reason checked:**

____ Bidder is an individual resident vendor who is a veteran of the United States armed forces, the reserves or the National Guard and has resided in West Virginia continuously for the four years immediately preceding the date on which the bid is submitted; **or,**

6. **Application is made for 3.5% resident vendor preference who is a veteran for the reason checked:**

____ Bidder is a resident vendor who is a veteran of the United States armed forces, the reserves or the National Guard, if, for purposes of producing or distributing the commodities or completing the project which is the subject of the vendor's bid and continuously over the entire term of the project, on average at least seventy-five percent of the vendor's employees are residents of West Virginia who have resided in the state continuously for the two immediately preceding years.

Bidder understands if the Secretary of Revenue determines that a Bidder receiving preference has failed to continue to meet the requirements for such preference, the Secretary may order the Director of Purchasing to: (a) reject the bid; or (b) assess a penalty against such Bidder in an amount not to exceed 5% of the bid amount and that such penalty will be paid to the contracting agency or deducted from any unpaid balance on the contract or purchase order.

By submission of this certificate, Bidder agrees to disclose any reasonably requested information to the Purchasing Division and authorizes the Department of Revenue to disclose to the Director of Purchasing appropriate information verifying that Bidder has paid the required business taxes, provided that such information does not contain the amounts of taxes paid nor any other information deemed by the Tax Commissioner to be confidential.

**Under penalty of law for false swearing (West Virginia Code, §61-5-3), Bidder hereby certifies that this certificate is true and accurate in all respects; and that if a contract is issued to Bidder and if anything contained within this certificate changes during the term of the contract, Bidder will notify the Purchasing Division in writing immediately.**

Bidder: _____ Signed: _____

Date: _____ Title: _____

**Check any combination of preference consideration(s) indicated above, which you are entitled to receive.*

RFQ No. 07110100

STATE OF WEST VIRGINIA
Purchasing Division

# PURCHASING AFFIDAVIT

**West Virginia Code §5A-3-10a states:** No contract or renewal of any contract may be awarded by the state or any of its political subdivisions to any vendor or prospective vendor when the vendor or prospective vendor or a related party to the vendor or prospective vendor is a debtor and the debt owned is an amount greater than one thousand dollars in the aggregate.

**DEFINITIONS:**
"Debt" means any assessment, premium, penalty, fine, tax or other amount of money owed to the state or any of its political subdivisions because of a judgment, fine, permit violation, license assessment, defaulted workers' compensation premium, penalty or other assessment presently delinquent or due and required to be paid to the state or any of its political subdivisions, including any interest or additional penalties accrued thereon.

"Debtor" means any individual, corporation, partnership, association, Limited Liability Company or any other form or business association owing a debt to the state or any of its political subdivisions. "Political subdivision" means any county commission; municipality; county board of education; any instrumentality established by a county or municipality; any separate corporation or instrumentality established by one or more counties or municipalities, as permitted by law; or any public body charged by law with the performance of a government function or whose jurisdiction is coextensive with one or more counties or municipalities. "Related party" means a party, whether an individual, corporation, partnership, association, limited liability company or any other form or business association or other entity whatsoever, related to any vendor by blood, marriage, ownership or contract through which the party has a relationship of ownership or other interest with the vendor so that the party will actually or by effect receive or control a portion of the benefit, profit or other consideration from performance of a vendor contract with the party receiving an amount that meets or exceed five percent of the total contract amount.

**EXCEPTION:** The prohibition of this section does not apply where a vendor has contested any tax administered pursuant to chapter eleven of this code, workers' compensation premium, permit fee or environmental fee or assessment and the matter has not become final or where the vendor has entered into a payment plan or agreement and the vendor is not in default of any of the provisions of such plan or agreement.

Under penalty of law for false swearing (***West Virginia Code*** §61-5-3), it is hereby certified that the vendor affirms and acknowledges the information in this affidavit and is in compliance with the requirements as stated.

**WITNESS THE FOLLOWING SIGNATURE**

Vendor's Name: _____

Authorized Signature: _____ Date: _____

State of _____

County of _____, to-wit:

Taken, subscribed, and sworn to before me this ___ day of _____, 20___.

My Commission expires _____, 20___.

**AFFIX SEAL HERE** **NOTORY PUBLIC** _____

SHEET NO. 1, 2, 3, 6, 7, 8, 9, 10, 11, 12 & 13 07110100

# WEST VIRGINIA
## DEPARTMENT OF TRANSPORTATION
## DIVISION OF HIGHWAYS
## WIDENING OF
## OF
## MAXWELL RUN CONCRETE SLAB

STATE PROJECT NO. S321-19-27.22
U.S. ROUTE 19 (SLS)
HACKERS CREEK DISTRICT
LEWIS COUNTY

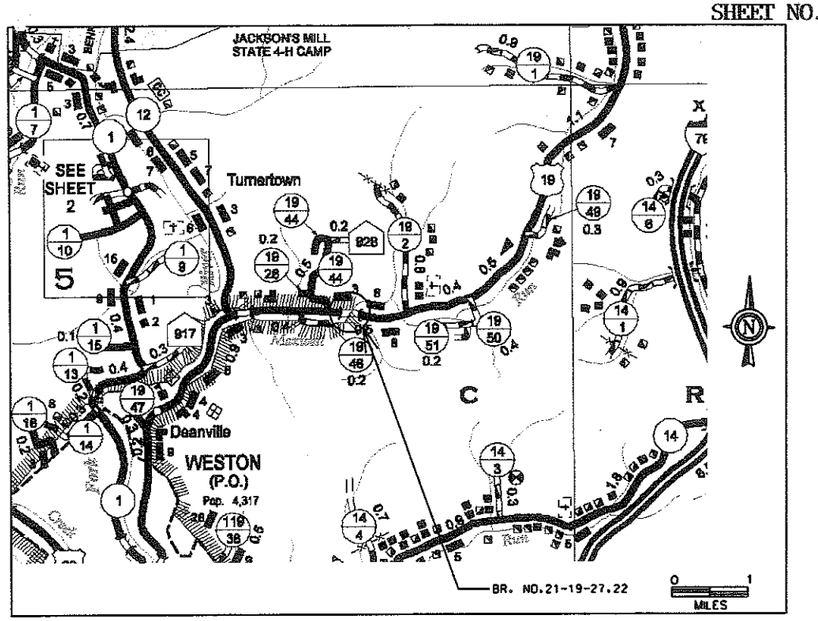


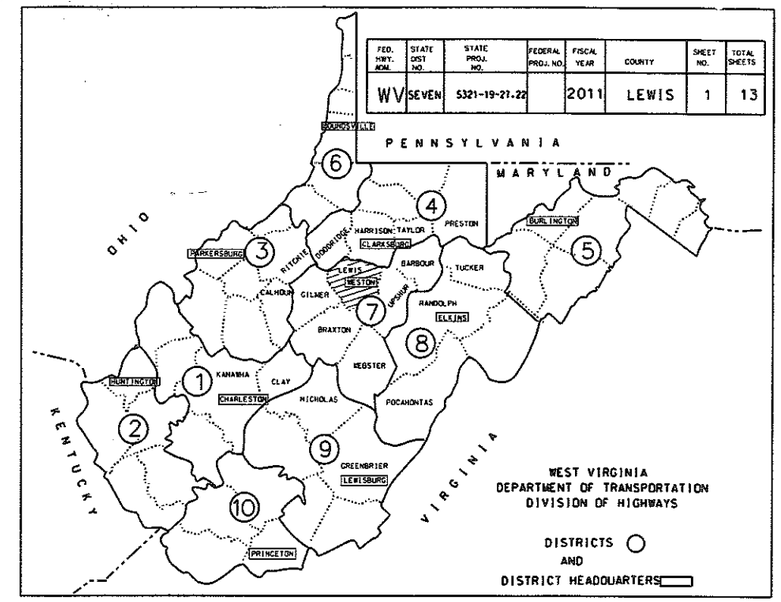


PROJECT LENGTH

| | | |
|---|---|---|
| BRIDGE | = 45.50' | L.F. = 0.01 MI. |
| TOTAL LENGTH | = 45.50 | L.F. = 0.01 MI. |

UTILITIES ENCOUNTERED:

TYPE OF CONSTRUCTION

BRIDGE WIDENING
BR. NO. 21-19-27.22
(8036.1)

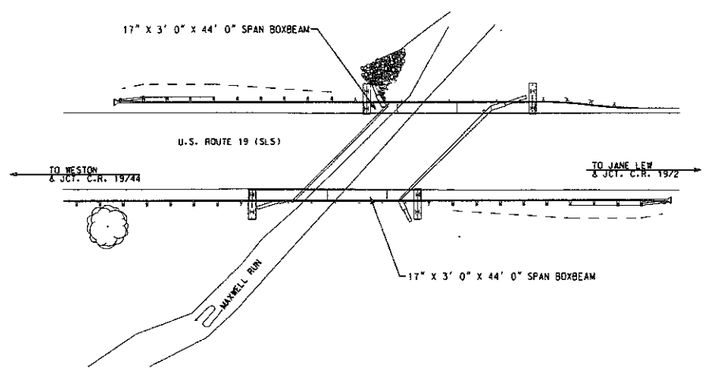


CONVENTIONAL SIGNS

- STATE LINE
- COUNTY LINE
- CORPORATION LINE
- PROPOSED R/W LINE
- PROPERTY LINE
- EXISTING FENCE
- DITCH
- EDGE OF STREAM
- PROPOSED GUARDRAIL
- EXISTING GUARDRAIL
- RAILROAD
- GAS LINE
- WATER LINE
- TELEPHONE LINE
- ELECTRIC LINE
- TELEPHONE POLE
- POWER POLE
- COMBINED POWER AND TELEPHONE POLE
- TREE
- SHRUB
- RIGHT OF WAY MARKER

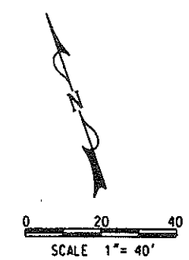


NOTE:

STANDARD DETAIL BOOK DATED JAN 1. 2000 & VOLUME II DATED JAN. 1. 1994. SHALL APPLY TO THIS PROJECT.

DESIGN DESIGNATION

| | | |
|---|---|---|
| A.D.T. | (2009) | 3600 |
| A.D.T. | (2029) | 4608 |
| D.H.V. | | |
| D. | | |
| T. | | |
| V. | | |

STANDARD SHEETS

| NO. | DATE |
|---|---|
| BR-2A | 8-93 |
| BR-B17A | 9-96 |
| BR-B17B | 9-96 |
| BR-B100 | 9-96 |
| BR-B101 | 9-96 |
| BR-B103 | 9-96 |
| BR-B104 | 9-96 |

| PREPARED BY: | DATE |
|---|---|
| RMW | 07-10 |
| CHECKED BY: GFL | 07-10 |
| REVIEWED BY: WRW | 08-10 |

INDEX TO SHEETS



| REVISION NUMBER | SHEET NUMBER | REVISIONS | DATE | BY |
|---|---|---|---|---|
| | | | | |

I HEREBY CERTIFY THAT THIS IS A CORRECT COPY OF THE PLANS OF PROJECT S321-19-27.22

EXECUTIVE SECRETARY

RECOMMENDED _____ DESIGNER

RECOMMENDED FOR APPROVAL _____ DISTRICT ENGINEER/MANAGER

RECOMMENDED FOR APPROVAL _____ STATE HIGHWAY ENGINEER

APPROVED _____ COMMISSIONER OF HIGHWAYS

PROJECT NO. S321-19-27.22

| PUBLIC ROADS DIV. | STATE DIST. NO. | PROJECT NUMBER | COUNTY | SHEET NO. | TOTAL SHTS |
|---|---|---|---|---|---|
| W.VA. | 7 | S321-19-27.22 | LEWIS | 2 | 13 |

## GOVERNING SPECIFICATIONS

The governing provisions applicable to this project are the West Virginia Department of Highways Standard Specifications, Roads and Bridges, adopted 2000, as amended by the current* Supplemental Specifications of the West Virginia Department of Highways, the contract plans and the contract documents.

*Current Supplemental Specifications shall be the Specifications in effect on the first day of project advertisement for letting to contract.

## DESIGN-NEW STRUCTURES (1)

This bridge is designed for an ~~HL-93~~ live load capacity, as well as for a ~~25~~ 50 p.s.f. wearing surface.

Design Unit Stresses:

| | |
|---|---|
| Reinforcing Steel-$f_s$= 20,000 p.s.i. | Class B Concrete-$f'_c$= 3,000 p.s.i. |
| Structural Steel (A36)-$f_s$= 20,000 p.s.i. | Class B Concrete-$f_c$= 1,200 p.s.i. |
| Structural Steel (A588)-$f_s$= 27,000 p.s.i. | Class B Concrete-n = 10 |

## DESIGN-REHABILITAION AND STRENGTHENING (2)

This bridge is strengthened for a live load capacity of (A). Strengthening steel design stress-$f_s$=(B) p.s.i. All structural steel shall be ASTM A36 unless otherwise designated on the construction plans.

## CONCRETE (CAST-IN-PLACE) (3)

Concrete shall be cured in accordance with Subsection 601.12 of the Standard Specifications. If used, polyethylene coated burlap shall conform to the requirements of Subsection 707.5 of the Standard Specifications.

The minimum covering, measured from the surface of the concrete to the face of any reinforcing steel bar, shall be 3 inches if the concrete is in contact with the ground surface and 2 inches otherwise, except as specified differently on the plans.

## SUBSTRUCTURE CONCRETE (CAST-IN-PLACE) (4)

All concrete in the substructure shall be Class B, air entrained.

Chamfer all exposed edges of the substructure concrete 1 inch, except for the abutment curbs, which shall be chamfered 3/4 inch.

The exposed surface of the substructure shall be Class 1, Ordinary Surface Finish, in accordance with Subsection 601.11.1 of the Standard Specifications, except for the abutment curbs and wingwalls, which shall be Class 2, Rubbed Finish, in accordance with Subsection 601.11.2 of the Standard Specifications.

The abutment curtain wall shall not be poured until after the superstructure is in place.

For footings embedded in rock, the top of the abutment footing shall be maintained at the elevations shown on the plans. The footings shall be carried a minimum of 1 foot into solid rock and poured against the face of the rock without forms, except where the rock excavation is not the entire depth of the footing.

The abutment bearing seat, upon which the shoes or other bearing devices will be set, shall be finished to true elevations as shown on the plans.

Fill anchor bolt holes with non-shrink grout after anchor bolts are set. The non-shrink grout shall consist of 1 part regular portland cement, 1 part silica sand and 1 part non-shrink admixture. The cost of the non-shrink grout shall be included in Pay Item 601-2, "Class B Concrete".

## SUPERSTRUCTURE CONCRETE (CAST-IN-PLACE) (5)

All concrete in the superstructure shall be Class K, air entrained. All concrete for decks, curbs, parapets or medians shall be Class K, air entrained, containing 7 bags of cement per cubic yard.

Chamfer all exposed edges of the curbs, parapets or medians ~~3/4"~~. The exposed surfaces of the curbs shall be Class 2, Rubbed Finish, in accordance with Subsection 601.11.2 of the Standard Specifications. Bridge decks shall be finished in accordance with Subsection 601.11.4 of the Standard Specifications.

## REINFORCING STEEL BARS (6)

All reinforcing steel bars shall be intermediate grade billet steel, Grade 40 or 60 in accordance with Subsection 709.1 of the Standard Specifications . The requirements of Section 602 of the Standard Specifications shall be followed.

The minimum splice length or dowel bar embedment shall be 30 bar diameters.

Reinforcement under the shoes or other bearing device shall be so placed so as to avoid interference with drilling of anchor bolt holes.

The inspector shall select random bars from the reinforcing bar list for test bars. He shall cut 5'-0" from the bars chosen, rebars have been detailed to allow a 30 bar diameter splice at each end. One rebar for each 10 tons or fraction thereof, of each size has been included in the bill of steel and will be paid for under Item 602-1. In the event all bars of any one size are not sent in one shipment, the supplier shall, at his expense, furnish one bar for each 10 tons or fraction thereof, for each extra shipment.

In the event that any shipment of material has been pre-tested and has been identified in accordance with Materials Control, Soil and Testing Division's Informational Memorandum Number 17(1M-17),the shipment may be accepted without further testing subject to record sampling procedures.

## STRUCTURE EXCAVATION (FOOTINGS FOUNDED IN ROCK) (7)

Structure excavation quantities through earth fill shall be measured from the top of rock to the original ground line, 18 inches outside the neat lines of the footings. No excavation will be classified as wet or rock excavation. Rock shall be excavated and paid for as structure excavation to the neat lines of the footings only. Rock shall be excavated until a level surface is provided with the entire footing resting on hard rock.

## STEEL TOUGHNESS REQUIREMENT (8)

The provisions of the AASHTO Specifications in accordance with Article 615.4.9 of the Standard Specifications shall apply to those items of structural steel as shown and/or designated by these plans.

## PAINTING (NEW STRUCTURES) (9)

Shop and field painting shall be in accordance with Section 615 of the current Standard Specifications and/or Special Provisions.

OPTION: (9A)

Paint system shall consist of one shop prime coat, one field prime coat and two field finish coats.

Shop Prime Coat: One complete coat of vinyl shop primer conforming to the requirements of Subsection 711.7 of the Standard Specifications. This will replace the shop paint specified in Subsection 615.6.3. Dry film thickness shall be a minimum of two (2) mils.

Field Prime Coat: One complete coat of linseedalkyd primer conforming to the requirements of Subsection 711.8 of the Standard Specifications. Dry film thickness shall be a minimum of two (2) mils.

First Finish Coat: One complete pigmented finish coat conforming to the requirements of Subsection 711.10 of the Standard Specifications. The color shall be (D) in accordance with Federal Standard 595, number (E). Dry film thickness shall be a minimum of two (2) mils.

Top Finish Coat: One complete pigmented finish coat conforming to the requirements of Subsection 711.11 of the Standard Specifications. The color shall be (F) in accordance with Federal Standard 595, number (E). Dry film thickness shall be a minimum of two (2) mils.

OPTION: (9B)

Paint system shall consist of shop prime coat, intermediate field fogcoat and finish topcoat. Field painting shall also include touch-up and repair of shop paint. Paint system shall be the inorganic zinc rich system meeting the requirements of Section 711.20 of the Standard Specifications.

Shop Prime Coat: Shall conform to the requirements of Subsection 711.20.2 of the Standard Specifications. Dry film thickness shall be minimum three (3) mils.

Intermediate Field Coat: Shall conform to the requirements of Subsection 711.20.3 of the Standard Specifications.

Topcoat: Shall conform to the requirements of Subsection 711.20.4 of the Standard Specifications. The color shall be (G) in accordance with Federal Standard 595, number (E). Dry film thickness of the total paint system shall be a minimum of seven (7) mils.

OPTION: (9C)

Paint system shall consist of application of shop prime coat and field touch-up and repair of shop coat. Paint system shall be the inorganic zinc rich primer meeting the requirements of Subsection 711.20.2 of the Standard Specifications. Dry film thickness shall be a minimum three (3) mils.

## CLEANING AND PAINTING (EXISTING STRUCTURES) (10)

Field cleaning and painting shall be in accordance with either OPTION (10A) or (10B) and shall also conform to all applicable requirements of Section 620 of the current Standard Specifications and/or Special Provisions. When it is determined that the structure contains an environmentally hazardous existing paint system then option (10C) shall also apply.

OPTION: (10A)

Cleaning: The portions of the structure listed in the special notes and quantity sheet, which is approximately (C) per cent, shall be cleaned in accordance with Subsection 620.6.1 of the Standard Specifications.

The remaining portions of the structure not specified, shall be cleaned in accordance with Subsection 620.6.2.

It is not intended that sound, adherent old paint be removed unless it is excessively thick or inflexible.

Attention is called to the requirements of paragraph 2 of Section 620.6 which requires that edges of paint be properly feathered to produce a smooth appearance.

In the event that there is a difference of opinion as to which areas must be sandblasted or hand cleaned or to the extent of surface cleaning or surface preparation, the decision of the Engineer shall be final.

Spot Painting: All steel surfaces cleaned to bare metal shall receive one coat of linseedalkyd primer conforming to the requirements of Section 711.8 of the Standard Specifications. This coat shall be tinted with a tinting agent, type as recommended by the paint manufacturer and approved by the Engineer.

Prime Coat: One complete coat of linseedalkyd primer shall be applied to the entire structure upon completion of the spot painting. The primer shall conform to the requirements of Section 711.8 of the Standard Specifications. Dry film thickness shall be a minimum of two (2) mils.

Intermediate Field Coat: Upon completion of application of the prime coat, the entire structure shall receive a minimum of one complete color undercoat conforming to the requirements of Section 711.10 of the Standard Specifications. Dry film thickness shall be a minimum two (2) mils. The color shall be (D) in accordance with Federal Standard 595, number (E).

Top Coat-Pigmented Finish Coat: Upon completion of applicaton of the intermediate coat, the entire structure shall receive a minimum of one complete pigmented finish coat conforming to the requirements of Section 711.11 of the Standard Specifications. Dry film thickness shall be a minimum two (2) mils. The color shall be (F) in accordance with Federal Standard 595, number (G).

OPTION: (10B)

Cleaning: All surfaces to be painted shall be cleaned and prepared in accordance with Section 620.5 of the Standard Specifications to a "white metal" or "near white metal" condition. The paint system shall be as follows:

Field Prime Coat: All bare surfaces shall be primed with an organic zinc rich primer conforming to the requirements of SSPC Specification Number 20, Type 2. Dry film thickness of the primer shall be a minimum of four (4) mils.

Field Intermediate Coat: The field intermediate coat shall conform to the requirements of Article 711.20.3 of the Standard Specifications.

Field Top Coat: The field top coat shall conform to the requirements of Article 711.20.4 of the Standard Specifications. The color shall be (F) in accordance with Federal Standard 595, number (G). Dry film thickness of the total paint system shall be a minimum seven (7) mils.

OPTION: (10C)

Environmental Protection: All portions of the structure shall be cleaned in accordance with the Special Provision for 620-Cleaning and Painting Existing Steel Bridges, Sub-articles 620.1, 620.9, 620.10, 620.11, and 620.12 as contained in these plans.

## STRUCTURE EXCAVATION (FOOTINGS FOUNDED ON PILES) (11)

Structure excavation quantities through earth fill shall be measured from the bottom of the footing to the original ground line, 18 inches outside the neat line of the footings. No excavation will be classified as wet or rock excavation.

## PREFORMED ELASTOMERIC JOINT SEALER (12)

The preformed elastomeric joint sealer shall conform to the requirements of Section 624 of the Standard Specifications.

## BRIDGE GUARDRAIL (13)

The guardrail, buffer end terminal sections, posts and end anchors shall conform to the requirements as set forth by the West Virginia Department of Highways Standard Details Book (Standard Sheets G.R.1 through G.R.7, as applicable) and Standard Bridge Plan Sheet BR-G1. Blocks are required. End anchorage shall be in accordance with Design Directive DD 16.4. All guardrail mounting hardware will be hot-dip galvanized after fabrication. Threads shall be retapped to ensure proper fit. Guardrail posts may be square or beveled.

## STRUCTURAL STEEL (14)

All structural steel shall conform to the requirements of ASTM A36 ($f_s$=20,000 p.s.i.) unless otherwise noted.

For superstructures utilizing steel grid flooring, structural steel conforming to the requirements of ASTM A588 ($f_s$=27,000 p.s.i.) may be substituted for ASTM A36 steel. No painting shall be required for ASTM A588 steel.

OPTION: (14A)

All ASTM A36 steel shall be blast cleaned and shop primed in accordance with Section 615 of the Standard Specifications.

## STEEL GRID FLOORING (CONCRETE FILLED TYPE) (15)

The steel grid flooring shall conform to all applicable requirements of Section 621 of the current Standard Specifications and/or all Special Provisions of the West Virginia Department of Highways.
The grid shall conform to all applicable requirements as set forth by the Bridge Grid Flooring Manufacturers Association. Size and type shall be as specified on the plans.
The steel grid flooring shall conform to all requirements of ASTM A36, A572 or A588, type as specified on the plans.

Cleaning: All surfaces to be painted shall be cleaned and prepared in accordance with Section 615.6 of the Standard Specifications to a "white metal" or "near white metal" condition. The paint system shall be as follows:

The steel grid flooring and all components shall either be shop painted with an inorganic zinc rich primer meeting Subsection 711.20.2 of the Standard Specifications or hot dipped galvanized meeting requirements of ASTM A123. Type of coating shall be as specified on the plans.

All reinforcing steel shall be number 3 billet steel bars either Grade 40 or 60 in accordance with Subsection 709.1 of the Standard Specifications.

The concrete used to fill the steel grid shall be Class A air entrained. The design stresses for this concrete are $f'_c$=3,500 psi, $f_c$=1,400 psi and n=10.

## STEEL GRID FLOORING (OPEN TYPE) (16)

The steel grid flooring shall conform to all applicable requirements of Section 621 of the current Standard Specifications and/or all Special Provisions of the West Virginia Department of Highways.
The grid shall conform to all applicable requirements as set forth by the Bridge Grid Flooring Manufacturers Association. Size and type shall be as specified on the plans.
The steel grid flooring shall conform to all requirements of ASTM A36, A572 or A588, type as specified on the plans.

Cleaning: All surfaces to be painted shall be cleaned and prepared in accordance with Section 615.6 of the Standard Specifications to a "white metal" or "near white metal" condition. The paint system shall be as follows:

The steel grid flooring and all components shall either be shop painted with an inorganic zinc rich primer meeting Subsection 711.20.2 of the Standard Specifications or hot dipped galvanized meeting requirements of ASTM A123. Type of coating shall be as specified on the plans.

## MAINTAINING TRAFFIC (17)

Traffic shall be maintained in accordance with Section 636 and Subsection 104.5 of the Standard Specifications.

## NAIL LAMINATED WOOD DECK (18)

Pine Bridge Lumber all lumber shall be surfaced four sides, pressure treated No. 2 Medium Grain or better Southern Pine as specified by current Grading Rules for Southern Pine Lumber published by the Southern Pine Inspection Bureau, New Orleans, Louisiana.

General Timber Deck Notes:

The allowable bending stress shall not be less than 1,200 p.s.i. and the allowable shearing stress shall not be less than 125 p.s.i.

All lumber shall be sized by being processed through a hit-or-miss surfacer.

This material shall be subject to random sampling and testing for compliance with the above specifications upon delivery.

Material will be accepted in bundles when the shipment is accompanied by a certificated, issued by a Department of Highways Materials Control, Soil and Testing Division certified inspector, showing that the lumber in the "white" meets the above requirements. When said certificate is not available, the material will be inspected by Department of Highways personnel at the delivery site and stacked and struck by the vendor.

Treatment: material for pressure treatment shall be in accordance with Subsection 710.5 of the Standard Specifications. Treatment shall be by either the full cell or empty cell process at 150 to 200 p.s.i. and a minimum retention as specified by the American Wood Preservative Association Standard C-2 shall be obtained.

Material and/or workmanship shall conform to the requirements of Subsection 710.1 of the Standard Specifications.

* Delivery: material shall be delivered in minimum shipments of 2,000 board feet or as directed by the Engineer. A maximum of 15 calendar days will be allowed for delivery following notification by the Engineer. The vendor shall notify the Engineer one working day prior to delivery of the material.

* General: any deviation from the above requirements may be cause for rejection, by the Engineer, of the entire shipment of lumber.

All non-specified material in any shipment shall be rejected and will be removed from the West Virginia Department of Highways storage area by the vendor prior to acceptance of the suitable material.

Notification shall be made on all receiving documents and/or delivery slips specifying reason(s) for rejection of any portion of a shipment. The signatures of both the Department of Highways and delivering agency representatives shall be affixed to documents on which rejection reason(s) is recorded.

The vendor must furnish to the Engineer a certificate of inspection, certifying that the total order meets the specifications for quality of lumber, preservative and retention required. A certified copy of the certificate of inspection must be attached to the invoice.

Under no circumstances may the vendor ship nor will the Department of Highways accept or pay for quantities of material in excess of the quantity stated on the purchase order, except upon advance approval of the Engineer.

The inspection agencies listed hereinafter may be considered as prequalified. If a vendor desires inspection by responsible agencies other than those listed, advance approval must be obtained from the Director, Materials Control, Soil and Testing Division, 312 Michigan Avenue, Charleston, West Virginia 25305.

Qualified Lumber Inspection Agencies:

McCallum Inspection Company
Norfolk, virginia

Froehling and Robertson, Inc.
Richmond, Virginia

A. W. Williams Inspection Company
Mobile, Alabama

Southern Pines Inspection Bureau
New Orleans, Louisiana

## PRESTRESSED CONCRETE SUPERSTRUCTURE (19)

Refer to the appropriate Standard Plan sheet for design stresses, specifications or notes.

Although the plans are detailed for a particular type of prestressed concrete beam, alternate types or shaped prestressed concrete beams may be furnished with the following stipulations:

a) Supplier must submit proposed alternate with design computations for review and approval by the Department of Highways.
b) Contractor must supply revised modified construction plans showing all revisions and modifications as required by the use of the alternate beam for review and approval by the Department of Highways.
c) Completion date of the project will not be extended due to any delay encountered in obtaining alternate beam and revised modified plan approval by the Department of Highways.
d) The project canot be started until the revised modified plans are approved by the Department of Highways.

NOTE SELECTION TABLE

| CODE | YES | NO | CODE | YES | NO |
|---|---|---|---|---|---|
| 1 | ✓ | | 10B | | ✓ |
| 2 | | ✓ | 10C | | ✓ |
| 3 | ✓ | | 11 | ✓ | |
| 4 | ✓ | | 12 | ✓ | |
| 5 | | ✓ | 13 | ✓ | |
| 6 | ✓ | | 14 | | ✓ |
| 7 | | ✓ | 14A | | ✓ |
| 8 | | ✓ | 15 | | ✓ |
| 9 | | ✓ | 16 | | ✓ |
| 9A | | ✓ | 17 | ✓ | |
| 9B | | ✓ | 18 | | ✓ |
| 9C | | ✓ | 19 | ✓ | |
| 10 | | ✓ | | | |
| 10A | | ✓ | | | |

CONTROL VALUE

| CODE | VALUE |
|---|---|
| A | NA |
| B | NA |
| C | NA |
| D | NA |
| E | NA |
| F | NA |
| G | NA |

APPROVED _____ DIRECTOR, STRUCTURES DIVISION DATE _____

WEST VIRGINIA DEPARTMENT OF TRANSPORTATION
DIVISION OF HIGHWAYS-STRUCTURES
STANDARD BRIDGE PLANS

GENERAL NOTES
STANDARD SHEET BR-2A

PREPARED: 11-26-90
REVISION: 5-91, 8-93

(*) These items are for Purchase Order Contract only.

THE WEST VIRGINIA DEPARTMENT OF TRANSPORTATION
DIVISION OF HIGHWAYS-STRUCTURES

WIDENING PLANS OF
MAXWELL RUN CONCRETE SLAB
ON U.S. 19 (F)
OVER MAXWELL RUN
LEWIS COUNTY

GENERAL NOTES

DESIGNED BY: RMW
DRAWN BY: [illegible]
CHECKED BY: GFL
REVIEWED BY: WRW
DATE: 08-10
SCALE: NONE
SHEET NO.: 2 OF 13

BRIDGE NUMBER
21-19-27.22
(8036.1)

| PROJECT NUMBERS | | WV DISTRICT | COUNTY | SHEET | OF |
|---|---|---|---|---|---|
| FEDERAL | STATE | | | | |
| | S321-19-27.22 | SEVEN | LEWIS | 3 | 13 |

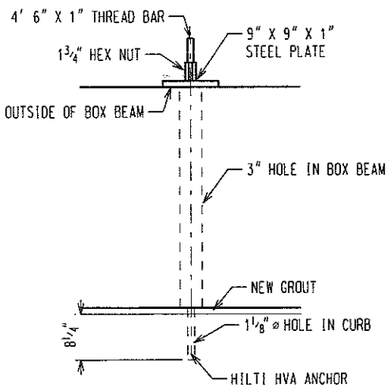


PLAN VIEW OF
TIE ROD LOCATIONS
NO SCALE

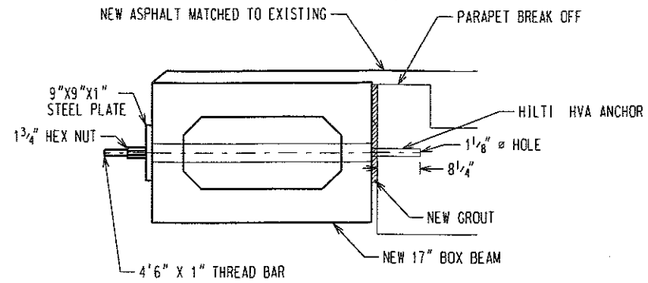


CROSS SECTION AT
TIE ROD LOCATIONS
NO SCALE

ESTIMATE OF QUANTITIES

PROJECT NO. S321-19-27.22
FOR INFORMATION ONLY

| DESCRIPTION | UNITS | NO. AND SIZE | TOTAL |
|---|---|---|---|
| CLASS B CONCRETE | CY | | 11 |
| 17" CONCRETE BOX BEAMS (EXT) | SF | 2 @ 45' 6" | 273 |
| ELASTOMERIC BEARING PADS (B2) | EA | 1 13/16" X4 3/4"X 15 1/2" | 8 |
| SWEDGED ANCHOR BOLTS | EA | 1" DIA. X 2' 0" | 4 |
| 9" X 9" X 1" PLATES | EA | | 4 |
| 1" X 4' 6" ALL THREAD W/NUTS | EA | | 4 |
| 1" PREFORMED ELASTOMERIC JOINT FILLER | SF | 8-PC.-4 3/4" X 5" | 1.3 |
| 1" PREFORMED ELASTOMERIC JOINT FILLER | SF | 8-PC.-9 5/8" X 3' 0" | 19.3 |
| 1" SPONGE RUBBER WASHER | EA | 8" X 8" W/ 3 1/2" DIA. HOLE | 4 |
| W12 X 65 PILING | LB | | 5200 |
| LOOP BARS FROM YARD | EA | 1' 6" X 2' 6" | 68 |
| #8 STRAIGHT BARS | LB | 10 @ 20' 0" EACH | 534 |
| #5 STRAIGHT BARS | LB | 8 @ 20' 0" EACH | 167 |
| HILTI EPOXY ANCHORS | EA | | 4 |
| TANGENT END TERMINAL TREATMENT (BY CONTRACT) | EA | | 3 |
| TL-2 BRIDGE RAIL | LF | | 100 |
| APPROACH RAIL (BY CONTRACT) | LF | | 25 |
| STONE | TON | | 25 |
| HLBC (WEARING) | TON | | 5 |
| FOUNDATION PROTECTION MATERIAL D50=1.5' | TON | | 13 |

*NOTE: GUARDRAIL POSTS WILL BE INCLUDED IN BOX BEAM CONTRACT & ATTACHED TO BEAMS BY FABRICATOR.

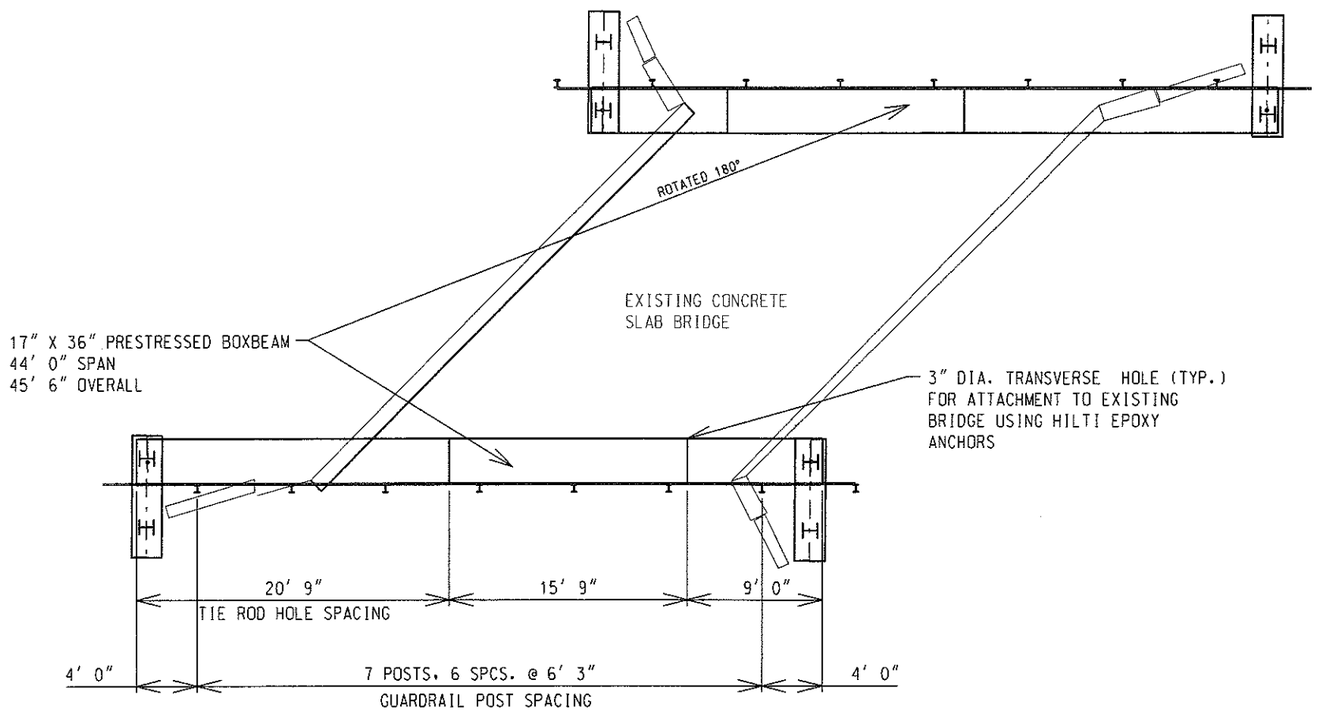


GUARDRAIL & TIE ROD LAYOUT

0 5 10
SCALE 1"= 10'

SCOPE OF WORK

1. EXCAVATE FOR NEW CAPS.
2. FLAG TRAFFIC AND DRILL FOR PILING (5' INTO ROCK).
3. SET PILES IN CONCRETE.
4. FORM AND POUR CAPS.
5. LOCATE, DRILL, AND INSTALL HILTI ANCHORS.
6. CLOSE TRAFFIC, SET NEW BEAMS.
7. USE HILTI ANCHORS TO ATTACH NEW BEAMS TO EXISTING SLAB.
8. FORM AND POUR WINGWALLS.
9. PLACE FPM.
10. BACKFILL WINGWALLS.
11. FORM AND CONSTRUCT SCOUR WALL.
12. PAVE.
13. INSTALL TET AND APPROACH RAIL (BY CONTRACT).
14. SITE DRESS, SEED, AND MULCH ALL DISTURBED AREAS.

| REVISIONS | DATE | BY |
|---|---|---|
| DESIGNED BY: RMW | DATE: 07-10 | |
| DRAWN BY: RMW | 07-10 | |
| CHECKED BY: GFL | 07-10 | |
| CHECKED BY: | | |
| REVIEWED BY: WRW | 08-10 | |

WEST VIRGINIA DEPT. OF TRANSPORTATION
DIVISION OF HIGHWAYS
DISTRICT SEVEN

WIDENING PLANS OF
MAXWELL RUN CONCRETE SLAB
ON U.S. 19 (F)
OVER MAXWELL RUN
LEWIS COUNTY

GUARDRAIL AND POST TENSIONING ROD LAYOUT, LIST OF ESTIMATED QUANTITIES, AND SCOPE OF WORK.

SHEET 3 OF 13

BR. NO. 21-19-27.22
(8036.1)

| PROJECT NUMBERS | | DISTRICT | COUNTY | SHEET NO. | TOTAL |
|---|---|---|---|---|---|
| STATE | FEDERAL | | | | |
| S321-19-27.22 | | 7 | LEWIS | 6 | 13 |

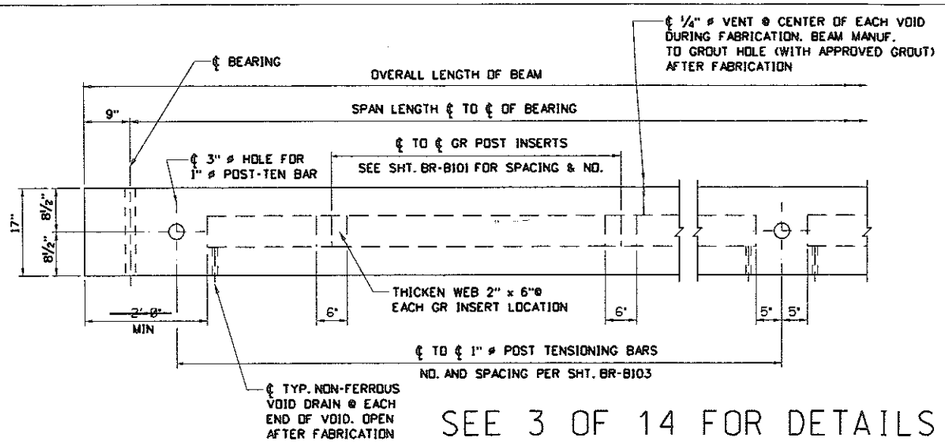


SEE 3 OF 14 FOR DETAILS

GENERAL ELEVATION VIEW

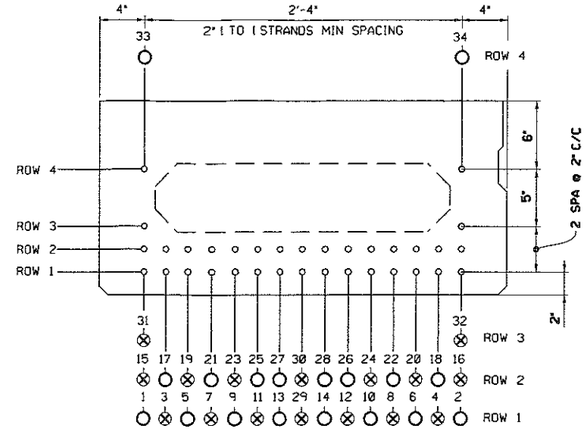


BEAM PRESTRESSING

TYPICAL @ BEAM END & MIDSPAN

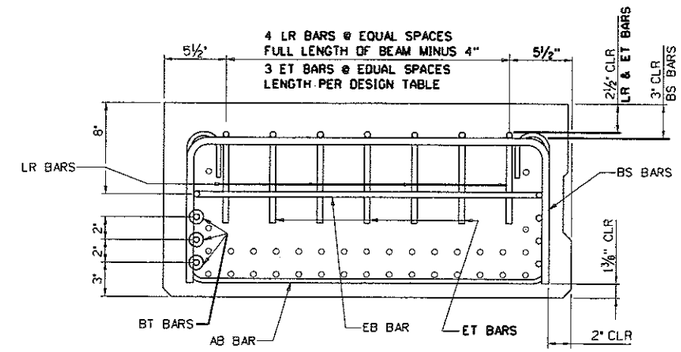


SECTION A-A

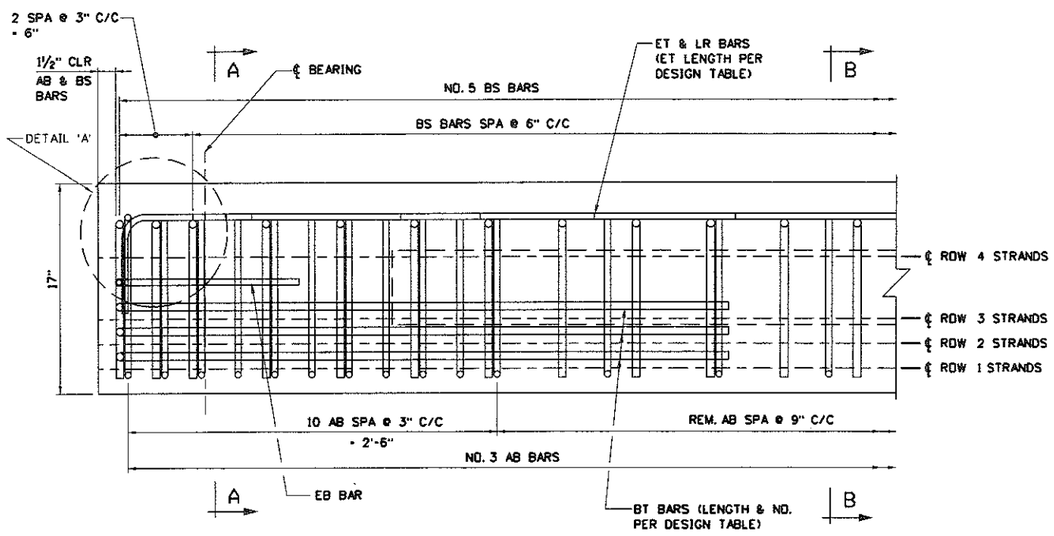


REINFORCING STEEL ELEVATION

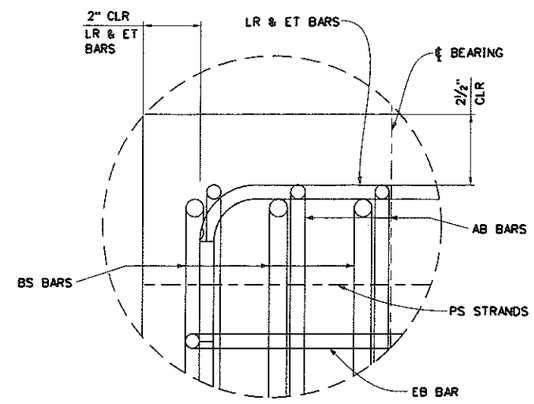


DETAIL "A"

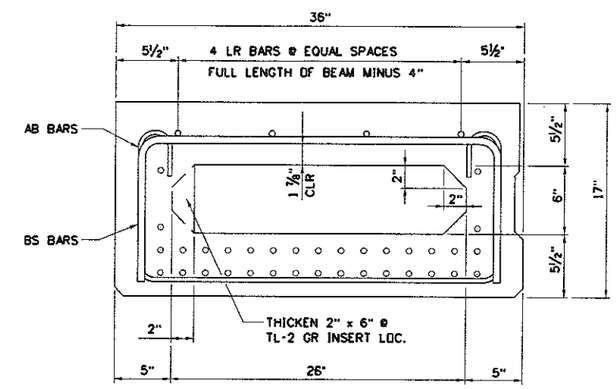


SECTION B-B

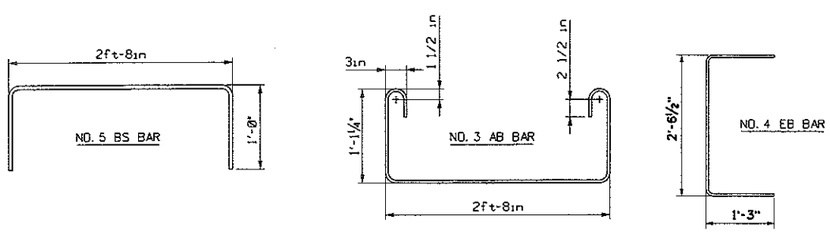


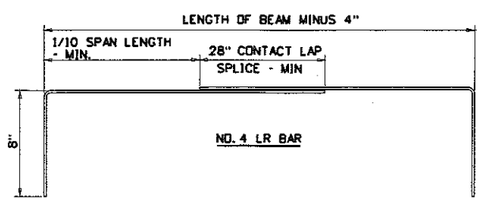


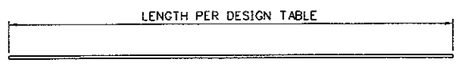


NO. 5 BT BARS SHALL BE UNCOATED REINFORCING

REINFORCING BAR DETAIL

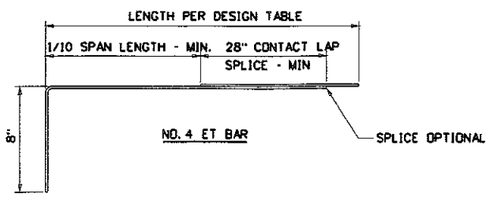


NOTES:

1. REFER TO SHEET BR-B102A FOR SHEAR KEY DETAILS.
2. DESIGNER SHALL USE THE FOLLOWING KEY TO INDICATE STRAND AND DEBONDING PATTERN ON "BEAM PRESTRESSING VIEW", THIS SHEET.
   - ○— ACTIVE STRAND
   - ▽— DEBOND STRAND: LENGTH FROM END OF BEAM ___
   - △— DEBOND STRAND: LENGTH FROM END OF BEAM ___
   - □— DEBOND STRAND: LENGTH FROM END OF BEAM ___
3. THIS SHEET SHALL BE USED IN CONJUNCTION WITH STANDARD SHEETS BR-B17B, BR-B100, BR-B101, BR-B102A & B, BR-B103, BR-B104, BR-B105A & B AND BR-B106 AS APPLICABLE.

WHEN A POST-TEN ACCESS POCKET IS USED AS DETAILED ON SHEET BR-103 STRANDS IN ROWS 3 AND 4 SHALL BE ELIMINATED, THE BEAM SHALL BE REDESIGNED AS NECESSARY.

APPROVED: Gregory Bailey, DIRECTOR, ENGINEERING DIVISION — DATE: 10-25-07

WEST VIRGINIA DEPARTMENT OF TRANSPORTATION
DIVISION OF HIGHWAYS
ENGINEERING DIVISION

17" PRESTRESSED CONCRETE BOX BEAMS DESIGN AND ASSEMBLY DETAILS

STANDARD SHEET BR-B17A

PREPARED: 07-02-07

REVISED:

WEST VIRGINIA DEPARTMENT OF TRANSPORT
DIVISION OF HIGHWAYS
ENGINEERING DIVISION

WIDENING PLANS OF MAXWELL RUN CONCRETE SLAB ON U.S. 19 (F) OVER MAXWELL RUN LEWIS COUNTY

17" PRESTRESSED BOX BEAM DESIGN AND ASSEMBLY DETAILS

DESIGNED BY: TW/CFL
DRAWN BY: BH/RMW
CHECKED BY: THB/CFL
REVIEWED BY: TW/WRW
DATE: 07/10
SCALE: NO SCALE
SHEET 8 OF 13
BRIDGE NO. 21-19-27.22 (B036.1)

| STATE PROJECT NUMBER | FEDERAL PROJECT NUMBER | STATE DIST. NO. | COUNTY | SHEET NO. | TOTAL SHEETS |
|---|---|---|---|---|---|
| S321-19-27.22 | | 7 | LEWIS | 7 | 13 |

MIN. CONCRETE STRENGTH @ RELEASE = 5500 PSI
MIN. CONCRETE STRENGTH @ 28 DAYS = 8000 PSI
INITIAL PULL/STRAND = 33,820 LBS
CROSS-SECTION AREA/STRAND = 0.167 SQ. IN.

## DESIGN DATA FOR 17" DEPTH ADJACENT BOX BEAM

| | | | | | | | | | | | | | | | | |
|---|---|---|---|---|---|---|---|---|---|---|---|---|---|---|---|---|
| SPAN LENGTH ℄ TO ℄ BEARING | | 20'-0" | 22'-0" | 24'-0" | 26'-0" | 28'-0" | 30'-0" | 32'-0" | 33'-3" | 34'-0" | 36'-0" | 38'-0" | 40'-0" | 44'-0" | | | |
| OVERALL LENGTH OF BEAM | | 21'-6" | 23'-6" | 25'-6" | 27'-6" | 29'-6" | 31'-6" | 33'-6" | 34'-9" | 35'-6" | 37'-6" | 39'-6" | 41'-6" | 45'-6" | | | |
| NO. OF 270 KSI, 1/2" ø LOW-RELAXATION STRANDS, AREA/STRAND = 0.167 SQ. IN. | | 10 | 10 | 10 | 10 | 12 | 12 | 14 | 12 | 14 | 16 | 16 | 16 | 18 | | | |
| STRAND POSITION NUMBER | ROW 1 | 1,2,11,12 | 1,2,11,12 | 1,2,11,12 | 1,2,11,12 | 1,2,7,8,13,14 | 1,2,7,8,13,14 | 1,2,5,6,9,10 | 1,2,5,6,9,10, | 1,2,7,8,13,14 | 1,2,5,6,9,10, 13,14 | 1,2,5,6,9,10, 13,14 | 1,2,5,6,9,10, 13,14 | 1,2,5,6,9,10, 13,14 | | | |
| | ROW 2 | 17,18,25,26 | 17,18,25,26 | 17,18,25,26 | 17,18,25,26 | 17,18,27,28 | 17,18,27,28 | 17,18,21,22, 27,28 | 21,22,27,28 | 17,18,21,22, 27,28 | 17,18,21,22, 27,28 | 17,18,21,22, 27,28 | 17,18,21,22, 27,28 | 17,18,21,22, 25,26,27,28 | | | |
| | ROW 3 | — | — | — | — | — | — | | — | — | — | — | — | | | | |
| | | | | | | | | | | | | | | | | | |
| | ROW 4 | 33,34 | 33,34 | 33,34 | 33,34 | 33,34 | 33,34 | 33,34 | 33,34 | 33,34 | 33,34 | 33,34 | 33,34 | 33,34 | | | |
| PRESTRESSING FORCE IMMEDIATELY AFTER STRAND RELEASE, Ppt, (KIPS/BEAM) | | 326 | 326 | 326 | 326 | 389 | 389 | 455 | 401 | 451 | 512 | 512 | 513 | 579 | | | |
| EFFECTIVE PRESTRESSING FORCE AFTER ALL LOSSES, Ppe, (KIPS/BEAM) | | 293 | 293 | 294 | 294 | 345 | 346 | 418 | 362 | 397 | 443 | 445 | 447 | 531 | | | |
| REQUIRED FACTORED MOMENT @ STRENGTH I, Mu (FT-KIPS/BEAM) | | 204 | 231 | 260 | 289 | 319 | 349 | 405 | 384 | 415 | 453 | 491 | 531 | 653 | | | |
| FACTORED FLEXURAL RESISTANCE, Mr (FT-KIPS/BEAM) | | 408 | 408 | 408 | 408 | 496 | 496 | 565 | 481 | 566 | 646 | 646 | 646 | 709 | | | |
| TOTAL NO. DEBONDED STRANDS | | — | — | — | — | — | — | — | — | — | — | — | — | — | | | |
| DEBONDED STRAND POSITION NUMBER & SHIELDING LENGTH FROM EACH END | ROW 1 | — | — | — | — | — | — | — | — | — | — | — | — | — | | | |
| | ROW 2 | — | — | — | — | — | — | — | — | — | — | — | — | — | | | |
| NUMBER & LENGTH #4 ET TOP TENSION BARS @ EACH END | | 3 - #4 x 3'-6" | 3 - #4 x 3'-6" | 3 - #4 x 4'-0" | 3 - #4 x 4'-0" | 3 - #4 x 4'-0" | 3 - #4 x 4'-6" | 3 - #4 x 7'-0" | 3 - #4 x 5'-0" | 3 - #4 x 5'-0" | 3 - #4 x 9'-0" | 3 - #4 x 9'-0" | 3 - #4 x 9'-6" | 3 - #4 x 10'-0" | | | |
| NUMBER & LENGTH #5 BT BOTTOM TENSION BARS @ EACH END | | 2 - #5 x 4'-0" | 2 - #5 x 4'-0" | 2 - #5 x 4'-6" | 2 - #5 x 4'-6" | 2 - #5 x 4'-6" | 2 - #5 x 5'-0" | 2 - #5 x 5'-0" | 4 - #5 x 7'-0" | 2 - #5 x 5'-6" | 2 - #5 x 5'-6" | 2 - #5 x 5'-6" | 2 - #5 x 6'-0" | 2 - #5 x 5'-0" | | | |
| DESIGN CAMBER + = POSITIVE (UP) (INCHES) | @ RELEASE | 0.13 | 0.14 | 0.16 | 0.17 | 0.28 | 0.30 | 0.41 | 0.28 | 0.42 | 0.59 | 0.62 | 0.63 | 0.82 | | | |
| | @ ERECTION | 0.21 | 0.24 | 0.26 | 0.27 | 0.45 | 0.47 | 0.65 | 0.43 | 0.65 | 0.93 | 0.95 | 0.95 | 1.20 | | | |
| | @ FINAL | 0.27 | 0.29 | 0.30 | 0.30 | 0.53 | 0.53 | 0.74 | 0.44 | 0.69 | 1.03 | 0.99 | 0.92 | 1.11 | | | |
| NUMBER & SPACING OF TL-2 GUARDRAIL INSERTS SEE NOTE 6 | NO OF INSERTS REQD. | | | | | | | 5 | | | | | | 7 | | | |
| | END OF BEAM TO ℄ OF FIRST INSERT EA. END | | | | | | | SEE SHEET 3 OF 14 | | | | | | SEE SHEET 3 OF 13 | | | |
| | ℄ OF 1st INSERT TO ℄ 2nd INSERT EA. END | | | | | | | SEE SHEET 3 OF 14 | | | | | | SEE SHEET 3 OF 13 | | | |
| WEIGHT OF TYPICAL BEAM INCLUDING DIAPHRAGM (TONS) | | 5.6 | 6.1 | 6.6 | 7.1 | 7.6 | 8.1 | 8.6 | 9.2 | 9.1 | 9.6 | 10.1 | 10.6 | 11.6 | | | |

NOTES

1. BEAM WEIGHTS LISTED IN THE DESIGN TABLE ARE BASED ON ZERO SKEW, 2 FT. LONG ENDBLOCK AND DIAPHRAGMS SPACED @ 15 FT C/C. WEIGHTS FOR SKEWED BEAMS, LONGER ENDBLOCKS AND ADDITIONAL DIAPHRAGRMS SHOULD BE ADJUSTED ACCORDINGLY.

   FOR ADDITIONAL DIAPHRAGMS, ADD 135 LBS/DIAPHRAGM.

   FOR SKEW ADD 17 LBS/DEGREE OF SKEW/END.

   FOR LONGER ENDBLOCK, ADD 163 LBS/LF/END.

2. DESIGNERS SHOULD NOTE THAT DATA IN STANDARD TABLE IS BASED ON EVEN SPAN LENGTHS, A TWO LANE STRUCTURE 8 BEAMS WIDE AND ZERO SKEW. SUPERIMPOSED DEAD LOADS INCLUDE TYPE F PARAPET (321 PLF) AND A FWS OF 50 PSF. FOR NON-STANDARD BRIDGES DATA SHOULD BE VERIFIED AND IF REQUIRED NEW DESIGN DATA ENTERED INTO BLANK COLUMNS. IN NO CASE SHALL THE STANDARD DESIGN TABLE BE ALTERED.

3. PREDICTED DESIGN CAMBER VALUES LISTED IN THE TABLE ARE BASED ON EMPIRICAL FORMULAS AND AS SUCH ARE APPROXIMATE. FOR MEMBERS WITH SPAN-TO-DEPTH RATIOS AT OR EXCEEDING 25, THE TOLERANCE VALUES LISTED IN APPENDIX B OF PCI MANUAL FOR QUALITY CONTROL, MNL-116, MAY NOT APPLY.
   MEASUREMENT OF CAMBER FOR COMPARISON TO PREDICTED DESIGN VALUES SHOULD BE COMPLETED WITHIN 72 HOURS OF RELEASE. ADDITIONALLY, CAMBER SHOULD BE EVALUATED UNDER CONDITIONS THAT MINIMIZE THE EFFECT OF TEMPERATURE VARIATION.

4. DESIGNER, FABRICATOR, AND ERECTOR SHALL BE AWARE THAT SKEWED END BEAMS MAY TWIST OR WARP, CAUSING UNEVEN BEAM SEATING AT THE BEARINGS. THE CONTRACTOR IS REQUIRED TO CORRECT AT THE TIME OF ERECTION., BEFORE THE BEAMS ARE SECURED IN PLACE. METHOD OF CORRECTION SHALL PROVIDE AN EVEN, TOTAL BEARING AND A LEVEL TOP BEAM SURFACE. TOLERANCE, AFTER CORRECTION, SHALL BE (+/-) 1/8 INCH. THE FABRICATOR SHALL NOTIFY THE CONTRACTOR AND DESIGNER IF CORRECTIONS ARE REQUIRED PRIOR TO SHIPMENT.

5. MAXIMUM BEAM SKEW SHALL BE 30 DEGREES.

6. DESIGNER INPUT VALUES OF NUMBER OF INSERTS, DISTANCE FROM END OF BEAM TO ℄ FIRST INSERT, AND ℄ FIRST INSERT TO ℄ SECOND INSERT. ABOVE VALUES SHALL BE BASED ON THE REQUIRED 6'-3" GUARDRAIL POST SPACING ACROSS THE BRIDGE.

7. SPECIAL STRAND NOTE FOR 17" BOX SECTION ONLY: WHEN TL-2 GUARDRAIL INSERTS ARE REQUIRED THE BOTTOM INSERT (TYPE 2A ANCHOR) CONFLICTS WITH STRAND NO. 15. STRANDS 15 AND 16 HAVE BEEN MOVED TO POSITIONS 17 AND 18. FOR UNIFORMITY PURPOSES, ALL BEAMS OF THE SAME DESIGN SHALL USE SAME STRAND PATTERN.

8. THIS SHEET SHALL BE USED IN CONJUNCTION WITH STANDARD SHEETS BR-B17A, BR-B100, BR-B101, BR-B102A & B, BR-B103, BR-B104, ~~BR-B105A & B AND~~ BR-B106 AS APPLICABLE.

APPROVED: Gregory Bailey DIRECTOR, ENGINEERING DIVISION DATE: 10-25-07

WEST VIRGINIA DEPARTMENT OF TRANSPORTATION
DIVISION OF HIGHWAYS
ENGINEERING DIVISION

DESIGN TABLE FOR 17"
PRESTRESSED BOX BEAM

*STANDARD SHEET BR-B17B*

PREPARED: 07-02-07
REVISED:

WEST VIRGINIA DEPARTMENT OF TRANSPORTATION
DIVISION OF HIGHWAYS
ENGINEERING DIVISION

WIDENING PLANS OF
MAXWELL RUN CONCRETE SLAB
ON U.S. 19 (F)
OVER MAXWELL RUN
LEWIS COUNTY

DESIGN TABLE FOR 17"
PRESTRESSED BOX BEAM

DESIGNED BY: THB/ GFL
DRAWN BY: THB/ RMW
CHECKED BY: TM/ GFL
REVIEWED BY: TW/ WRW
DATE: 07/10
SCALE: NO SCALE
SHEET NO 7 OF 13
BRIDGE NUMBER
21-19-27.22
(8036.1)

| STATE PROJECT NUMBER | FEDERAL PROJECT NUMBER | STATE DIST. NO. | COUNTY | SHEET NO. | TOTAL SHEETS |
|---|---|---|---|---|---|
| S321-19-27.22 | | 7 | LEWIS | 8 | 13 |

## GOVERNING SPECIFICATIONS

THE WEST VIRGINIA DEPARTMENT OF TRANSPORTATION, DIVISION OF HIGHWAYS STANDARD SPECIFICATIONS FOR ROADS AND BRIDGES, ADOPTED 2000 AS AMENDED BY THE CURRENT SUPPLEMENTAL SPECIFICATIONS. THE CONTRACT PLANS AND CONTRACT SPECIAL PROVISIONS ARE THE GOVERNING PROVISIONS APPLICABLE TO THIS PROJECT.

ALL BEAMS ARE DESIGNED IN ACCORDANCE WITH THE AASHTO LRFD BRIDGE DESIGN SPECIFICATIONS, DATED 1998 AS AMENDED BY THE 2003 INTERIM SPECIFICATIONS.

## DESIGN NOTES

ALL STANDARD ADJACENT PRESTRESSED CONCRETE BRIDGE BEAMS ARE DESIGNED TO MEET THE FOLLOWING CRITERIA:

1. DESIGN LOADS:
   HL-93 LIVE LOAD IN ACCORDANCE WITH THE AASHTO LRFD BRIDGE DESIGN SPECIFICATIONS.

   FUTURE WEARING SURFACE OF 50 PSF OF ROADWAY.

   ~~TYPE F PARAPET WEIGHING 321 PLF.~~

   DIAPHRAGM DEAD LOAD, NUMBER REQUIRED BASED ON 15'-0" MAX. SPACING.

2. TWO LANE BRIDGE WITH AN OVERALL WIDTH OF 24'-5" (INCL.¾" GAP BETWEEN ADJ. BEAMS), A CURB-TO-CURB WIDTH OF 22'-1", TRANSVERSE POST-TENSIONING, AND ZERO SKEW.

3. DESIGN STRENGTH AND UNIT STRESSES:

| | |
|---|---|
| MINIMUM CONCRETE STRENGTH @ STRAND RELEASE | 5500 PSI |
| MINIMUM CONCRETE STRENGTH @ 28 DAYS | 8000 PSI |
| TEMPORARY STRESS LIMITS IN CONCRETE BEFORE LOSSES: | |
| COMPRESSION STRESS LIMIT @ STRAND RELEASE | 3600 PSI |
| TENSION STRESS LIMIT @ STRAND RELEASE | -200 PSI |
| COMPRESSIVE STRESS LIMITS IN CONCRETE @ SERVICE I AFTER LOSSES: | |
| @ FINAL 1 (PS+DL+LL) | 4800 PSI |
| @ FINAL 2 (PS+DL) | 3600 PSI |
| @ FINAL 3 [50%(PS+DL)+LL] | 3200 PSI |
| TENSILE STRESS LIMIT IN CONCRETE @ SERVICE III AFTER LOSSES: | |
| @ FINAL 1 (PS+DL+LL) | -270 PSI |
| TENDON STRESS LIMIT PRIOR TO TRANSFER: | 202.5 KSI |
| TENDON STRESS LIMIT AFTER ALL LOSSES: | 194.4 KSI |

4. DEBONDING OR SHIELDING OF STRANDS TO REDUCE TEMPORARY TENSILE STRESSES IS PERMITTED, HOWEVER DEBONDING IS LIMITED TO 40% PER ROW AND 25% TOTAL. IN NO INSTANCES SHALL OUTER STRANDS BE DEBONDED. DEBONDED STRANDS SHALL BE SEPARATED BY AT LEAST ONE FULLY BONDED STRAND AND SHALL BE SYMMETRICAL ABOUT THE ℄ OF THE BEAM.
   SHIELDING OF STRANDS SHALL BE ACCOMPLISHED BY TAPING OR TIGHT FITTING PLASTIC TUBES TAPED AT EACH END.
5. THE ELASTOMERIC BEARING PADS PROVIDED IN THE STANDARD DESIGNS ARE BASED ON ZERO GRADE AND ARE LIMITED TO A MAXIMUM OF 5% GRADE. IN INSTANCES OF GRADES EXCEEDING THIS LIMIT, PADS SHALL BE SPECIFICALLY DESIGNED. INDIVIDUAL PAD DESIGNS SHALL BE IN ACCORDANCE WITH SECTION 14, AASHTO LRFD. BEVELED SOLE PLATES ARE PERMITTED.
6. MAXIMUM BEAM SKEW SHALL BE 30 DEGREES.
7. WHEN ALTERNATE DESIGNS OR SITE SPECIFIC DESIGNS ARE PROVIDED, CRITERIA SET FORTH IN THESE STANDARDS SHALL APPLY.
8. NEGATIVE DESIGN CAMBER AFTER ALL LOSSES IS NOT PERMITTED.
9. EACH BEAM PROVIDED IN THESE STANDARD DESIGNS HAS BEEN LOAD RATED IN ACCORDANCE WITH SECTION 3.15 OF THE WEST VIRGINIA DIVISION OF HIGHWAYS BRIDGE DESIGN MANUAL, 2004. ADDITIONALLY, LOAD RATING PROCEDURES ARE IN ACCORDANCE WITH THE AASHTO MANUAL FOR CONDITION EVALUATION AND LOAD AND RESISTANCE FACTOR RATING OF HIGHWAY BRIDGES, 2003.

LAP SPLICE TABLE

| BAR SIZE | NO. 3 | NO. 4 | NO. 5 | NO. 6 |
|---|---|---|---|---|
| SPLICE LEN. | 21" | 28" | 34" | 41" |

THIS SHEET SHALL BE USED IN CONJUNCTION WITH STANDARD SHEETS BR-B17A & B THRU BR-B42A & B, BR-B101, BR-B102A & B, BR-B103, BR-B104, ~~AND BR-B105A & B~~ AS APPLICABLE.

## MATERIALS & FABRICATION NOTES

- THE PRESTRESSED CONCRETE BEAMS SHALL CONFORM TO ALL APPLICABLE PROVISIONS OF SECTION 603 OF THE STANDARD SPECIFICATIONS.

MILD REINFORCEMENT:

- ALL MILD REINFORCING STEEL SHALL BE GRADE 60, DEFORMED BILLET STEEL AND SHALL BE EPOXY COATED EXCEPT WHERE NOTED. ALL UNCOATED REINFORCING SHALL MEET THE REQUIREMENTS OF AASHTO M31. ALL EPOXY COATED REINFORCING SHALL MEET THE REQUIREMENTS OF AASHTO M284, EXCEPT WHERE AMENDED BY SECTION 709.1 OF THE STANDARD SPECIFICATIONS.
- ALL TENSION LAP SPLICES SHALL BE A CLASS B, CONTACT TYPE. MINIMUM LAP SPLICE LENGTHS SHALL BE AS GIVEN IN THE "LAP SPLICE TABLE", THIS SHEET. ADDITIONALLY, IF LAP SPLICING OF ET, LR, AND BT BARS IS USED, TERMINATION OF THE SPLICE SHALL BE NO CLOSER TO THE END OF THE BEAM THAN 1/10 OF THE SPAN LENGTH.
- MINIMUM BAR BENDING DIAMETER SHALL BE 6 BAR DIAMETERS, EXCEPT THAT NO. 4 AB BARS MAY HAVE A MINIMUM BEND DIAMETER OF 4 BAR DIAMETERS.
- MINIMUM CONCRETE COVER SHALL BE AS SPECIFIED IN SECTION 603.5 OF THE STANDARD SPECIFICATIONS, EXCEPT WHERE NOTED ON THE PLANS.

PRESTRESSING STRAND:

- ALL PRESTRESSING STEEL SHALL BE ½" ø, GRADE 270, 7 WIRE UNCOATED, LOW-RELAXATION STRAND MEETING THE REQUIREMENTS OF AASHTO M203, SUPPLEMENT S1.
- ALL BEAMS DESIGNED IN THESE STANDARDS UTILIZE STRANDS WITH A NOMINAL AREA OF 0.167 SQ. IN. STRANDS WITH A NOMINAL AREA OF 0.153 SQ. IN. IS PERMITTED FOR INDIVIDUAL OR ALTERNATE DESIGNS, HOWEVER THE DESIGNER IS ENCOURAGED TO USE THE LARGER STRAND FOR UNIFORMITY REASONS. IN NO CASES WILL STRESS-RELIEVED STRAND BE PERMITTED.
- ALL STRANDS SHALL BE ENCLOSED INSIDE THE STIRRUP CAGE FOR THE FULL LENGTH OF THE BEAM.
- ALL EXPOSED PRESTRESSING STRAND AT EACH BEAM END SHALL BE SHOP COATED WITH A LIQUID COLD-APPLIED ELASTOMERIC WATERPROOFING MEMBRANE. MATERIAL SHALL BE SONOSHIELD HLM 5000, MANUFACTURED BY DEGUSSA CHEMICALS OR APPROVED EQUAL.

CONCRETE:

- ALL CONCRETE USED IN MANUFACTURING PRESTRESSED CONCRETE BEAMS SHALL MEET THE REQUIREMENTS OF SECTION 603.6 OF THE STANDARD SPECIFICATIONS. DESIGN STRENGTHS SHALL MEET OR EXCEED THE MINIMUM VALUES SET FORTH IN THESE PLANS.
- ALL CONCRETE USED IN PARAPETS AND CURBS SHALL BE CLASS K CONCRETE.

ELASTOMERIC BEARING PADS:

- ALL BEARING PADS SHALL MEET THE APPLICABLE REQUIREMENTS AS SET FORTH IN SECTION 18.2 OF THE AASHTO LRFD BRIDGE CONSTRUCTION SPECIFICATIONS, 1998 EDITION WITH CURRENT INTERIMS. ALL BEARINGS SHALL BE STEEL REINFORCED LAMINATED BEARINGS.
- THE ELASTOMER MATERIAL SHALL BE DURO 60 WITH A MINIMUM LOW TEMPERATURE GRADE OF 3 (ZONE C).
- ALL STEEL REINFORCING SHALL MEET THE REQUIREMENTS OF AASHTO M270, GRADE 36.

GUARDRAIL, GUARDRAIL POSTS, TUBING & INSERTS:

- ALL W-BEAM GUARDRAIL AND ATTACHMENT HARDWARE SHALL BE IN ACCORDANCE WITH SECTION 712.4 OF THE STANDARD SPECIFICATIONS. GUARDRAIL POSTS, STRUCTURAL TUBING, POST ATTACHMENT INSERTS, AND HARDWARE SHALL MEET THE LISTED MATERIAL AND COATING SPECIFICATIONS:

| ITEM | DESCRIPTION | MATERIAL SPEC. | COATING SPEC. |
|---|---|---|---|
| POST | W6x25 | AASHTO M270, GR 36 | AASHTO M111 |
| PLATE | ½" x 7" | AASHTO M270, GR 36 | AASHTO M111 |
| TUBING | TS 8x4x3/16 | ASTM A500, GR B | AASHTO M111 |
| CHANNEL | C7x9.8 | AASHTO M270, GR 36 | AASHTO M111 |
| FERRULE (TYPE 2A ANCHOR) | 1¼" ø x 2½" MIN LEN. | ASTM A108 (11L17 STEEL) | AASHTO M232 |
| WIRE (TYPE 2A ANCHOR) | ⅜" ø | ASTM A510 (1018 STEEL) | AASHTO M232 |
| STUDS | 1¼" ø x 8" LONG | ASTM A108 (1045 C.D. STEEL) | AASHTO M232 |
| NUTS | 1¼" ø | AASHTO M291, CLASS C | AASHTO M232 |
| COUPLERS (TYPE 1A ANCHOR) | 1¼" ø x 5" LONG | ASTM A108 (12L14 STEEL) | AASHTO M232 |
| BOLTS (TYPE 1A ANCHOR) | 1¼" ø x 12" LONG | AASHTO M164 (TYPE 1, HH) | AASHTO M232 |
| BOLTS | ⅝" ø x ALL LEN. | AASHTO M164 (TYPE 1, HH) | AASHTO M232 |
| NUTS | ⅝" ø | AASHTO M291, CLASS C | AASHTO M232 |
| WASHERS | ALL | AASHTO M293 | AASHTO M232 |

WELDING:

- TACK WELDING OF REINFORCEMENT IS NOT PERMITTED. REINFORCING CAGES AND LONGITUDINAL STEEL SHALL BE ADEQUATELY TIED WITH APPROVED MEANS TO PREVENT RACKING AND MISALIGNMENT.
- ALL WELDING OF FABRICATED ITEMS, AS SHOWN IN THESE PLANS SHALL BE IN ACCORDANCE WITH ALL APPLICABLE PROVISIONS OF AASHTO/AWS D1.5, 2002.

POST-TENSIONING BARS:

- POST - TENSIONING THREAD BARS SHALL BE ONE INCH DIAMETER, 150 KSI STEEL, AND SHALL CONFORM TO AASHTO M275, TYPE II. STEEL THREAD BARS SHALL BE DESIGNED TO ALLOW THE USE OF HEAVY HEX NUTS AND COUPLERS THAT THREAD ONTO THE END OF THE DEFORMATIONS. HEAVY HEX NUTS AND COUPLERS SHALL BE OF A DESIGN AND MATERIAL RECOMMENDED BY THE BAR MANUFACTURER TO DEVELOP THE FULL TENSILE STRENGTH OF THE BAR. PROPERLY DOCUMENTED CERTIFIED MILL TEST REPORTS SHALL BE PROVIDED FOR EACH HEAT OF STEEL THREAD BARS.
- ALL POST-TENSIONING THREAD BARS, NUTS, BEARING PLATES, COUPLERS, AND ANCILLARY HARDWARE SHALL BE HOT-DIPPED GALVANIZED IN ACCORDANCE WITH AASHTO M111. THE GALVANIZING PLANT SHALL ADMINISTER ADEQUATE QUALITY CONTROL MEASURES TO SAFEGUARD AGAINST HYDROGEN EMBRITTLEMENT. QUALITY CONTROL MEASURES SHALL COMPLY WITH ASTM A-143. CERTIFICATION FOR HOT-DIP GALVANIZING SHALL BE PROVIDED BY THE GALVANIZING PLANT.
- ALL POST-TENSIONING BEARING PLATES SHALL CONFORM TO AASHTO M270, GRADE 36.

SHEAR KEY GROUT:

- SHEAR KEY GROUT SHALL BE A GROUT THAT IS RECOMMENDED BY THE MANUFACTURER FOR A POURABLE GROUT APPLICATION AND THAT BASED ON THE MANUFACTURER'S TEST DATA WILL ATTAIN A MINIMUM OF 4500 PSI COMPRESSIVE STRENGTH IN 3 DAYS UNDER CONDITIONS REPRESENTATIVE OF THE CONDITIONS TO BE EXPERIENCED AT THE SITE. THE GROUT MUST BE LISTED ON THE APPROVED LIST OF GROUTS PUBLISHED BY THE WEST VIRGINIA DIVISION OF HIGHWAYS, MATERIALS CONTROL, SOIL AND TESTING DIVISION. THE CONTRACTOR SHALL PRE-TEST THE PROPOSED GROUT FOR COMPRESSIVE STRENGTH AT 3 AND 7 DAYS AND SUBMIT THE RESULTS TO THE BRIDGE PROJECT MANAGER FOR APPROVAL PRIOR TO INSTALLATION OF THE GROUT IN THE STRUCTURE. THE TESTS WILL BE BASED ON A POURABLE CONSISTENCY WITH THE SAME WATER/GROUT MIXTURE RATIO TO BE USED IN THE STRUCTURE.
- THE CONTRACTOR SHALL BE REQUIRED TO SUBMIT FOR EACH PROJECT, THE GROUT PRE-TEST RESULTS OBTAINED IN THE NOTE ABOVE. THE CONTRACTOR SHALL BE REQUIRED TO PERFORM A NEW PRE-TEST AND SUBMISSION FOR APPROVAL UNDER ANY OF THE FOLLOWING CONDITIONS:
  - A PERIOD OF 18 MONTHS HAS ELAPSED SINCE LAST PRE-APPROVAL TESTING.
  - GROUT MANUFACTURER HAS REVISED OR CHANGED THE GROUT SPECIFICATIONS.
  - THE CONTRACTOR ALTERS THE WATER/GROUT MIXTURE RATIO.
  - THE CONTRACTOR CHANGES GROUT MANUFACTURER.
  - THE CONTRACTOR IS REQUIRED TO COMPLETE THE GROUT STRENGTH TABLE ON BR-B103.
- TEST PROCEDURE FOR DETERMINING THE COMPRESSIVE STRENGTH OF GROUT SHALL USE CUBE SPECIMENS IN ACCORDANCE WITH ASTM C109, AS MODIFIED BY ASTM C1107. GROUT TESTING IN ACCORDANCE WITH AASHTO T23 (STANDARD CYLINDER TEST) IS NOT ACCEPTABLE.

PROTECTIVE SURFACE TREATMENT:

- EACH PRESTRESSED CONCRETE BEAM SHALL BE TREATED BY THE MANUFACTURER AT THE FABRICATION PLANT WITH AN APPROVED CONCRETE SEALER (SILANE). AN APPROVED LIST OF CONCRETE SEALERS ARE ON FILE AT THE WEST VIRGINIA DIVISION OF HIGHWAYS, MATERIALS CONTROL, SOIL AND TESTING DIVISION. COVERAGE SHALL INCLUDE TOP AND BOTTOM OF INTERIOR BEAMS, AND TOP, BOTTOM AND EXTERIOR SIDE OF EXTERIOR BEAM. APPLICATION RATE SHALL BE PER TREATMENT MANUFACTURER'S RECOMMENDATION.
- AFTER COMPLETION OF THE SILANE TREATMENT BY FABRICATOR AND A MAXIMUM OF FIVE WORKING DAYS PRIOR TO SHIPMENT OF THE BEAMS, THE FABRICATOR SHALL BE RESPONSIBLE FOR ABRASIVE BLAST CLEANING TO CLEAN WHITE CONCRETE THE INTERIOR SIDES OF BEAMS FOR THE FULL LENGTH. CLEAN WHITE CONCRETE SHALL MEAN REMOVAL OF ALL DIRT, GREASE, OIL, AND LOOSE CONCRETE LAITANCE AND PROVIDE A ROUGHENED CONCRETE SURFACE. BLASTING MEDIUM SHALL BE APPROVED BY THE DIVISION OF HIGHWAYS.

SHOP DRAWINGS:

THE FABRICATOR SHALL BE RESPONSIBLE FOR THE PREPARATION OF SHOP DRAWINGS IN ACCORDANCE WITH THE WEST VIRGINIA DIVISION OF HIGHWAYS DOCUMENTS, DD-102 AND THE STANDARD SPECIFICATIONS. ADDITIONAL INFORMATION IS PROVIDED IN SECTION 7 OF THE BRIDGE DESIGN MANUAL. SHOP DRAWINGS SHALL INCLUDE THE FABRICATOR'S DETENSIONING PLAN.

DIRECTOR, ENGINEERING DIVISION — DATE:

WEST VIRGINIA DEPARTMENT OF TRANSPORTATION
DIVISION OF HIGHWAYS
ENGINEERING DIVISION

PRESTRESSED CONCRETE BEAM

DESIGN & ASSEMBLY NOTES

STANDARD SHEET BR-B100

PREPARED: 1-14-05

REVISION

WEST VIRGINIA DEPARTMENT OF TRANSPORTATION
DIVISION OF HIGHWAYS
ENGINEERING DIVISION

WIDENING PLANS OF
MAXWELL RUN CONCRETE SLAB
ON U.S. 19 (F)
OVER MAXWELL RUN
LEWIS COUNTY

PRESTRESSED CONCRETE BEAM

DESIGN & ASSEMBLY NOTES

DESIGNED BY: THB/ GFL
DRAWN BY: THB/ RMW
CHECKED BY: TM/ GFL
REVIEWED BY: WRW
DATE: 07/10
SCALE: NO SCALE
SHEET NO 8 OF 13
BRIDGE NUMBER 21-19-27.22 (B036.1)

| STATE PROJECT NUMBER | FEDERAL PROJECT NUMBER | STATE DIST. NO. | COUNTY | SHEET NO. | TOTAL SHEETS |
|---|---|---|---|---|---|
| S321-19-27.22 | | 7 | LEWIS | 9 | 13 |

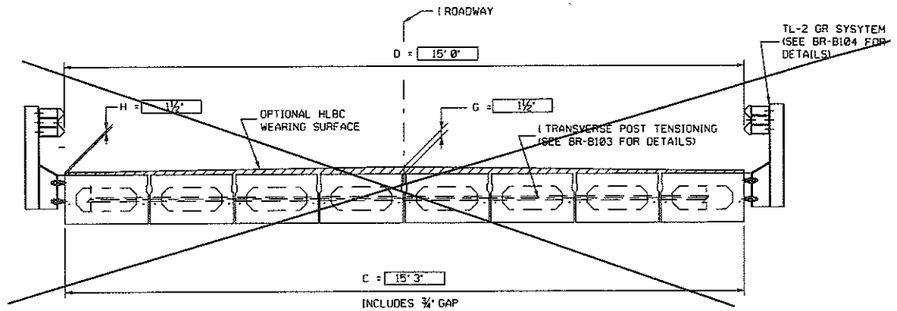


SEE SHEET 3 OF 13

TYPICAL CROSS-SECTION WITH GUARDRAIL

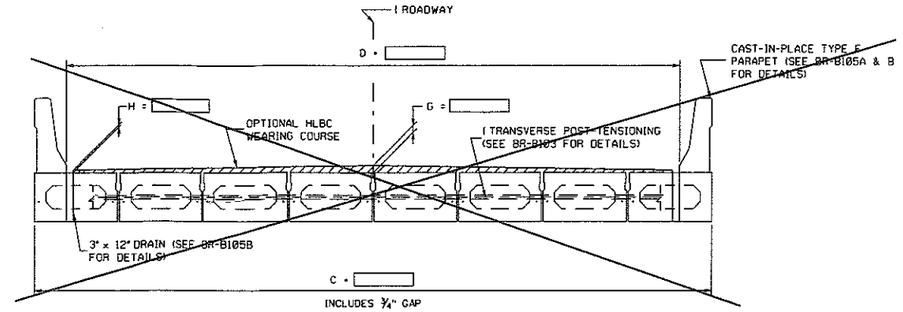


TYPICAL CROSS-SECTION WITH PARAPET OR CURB

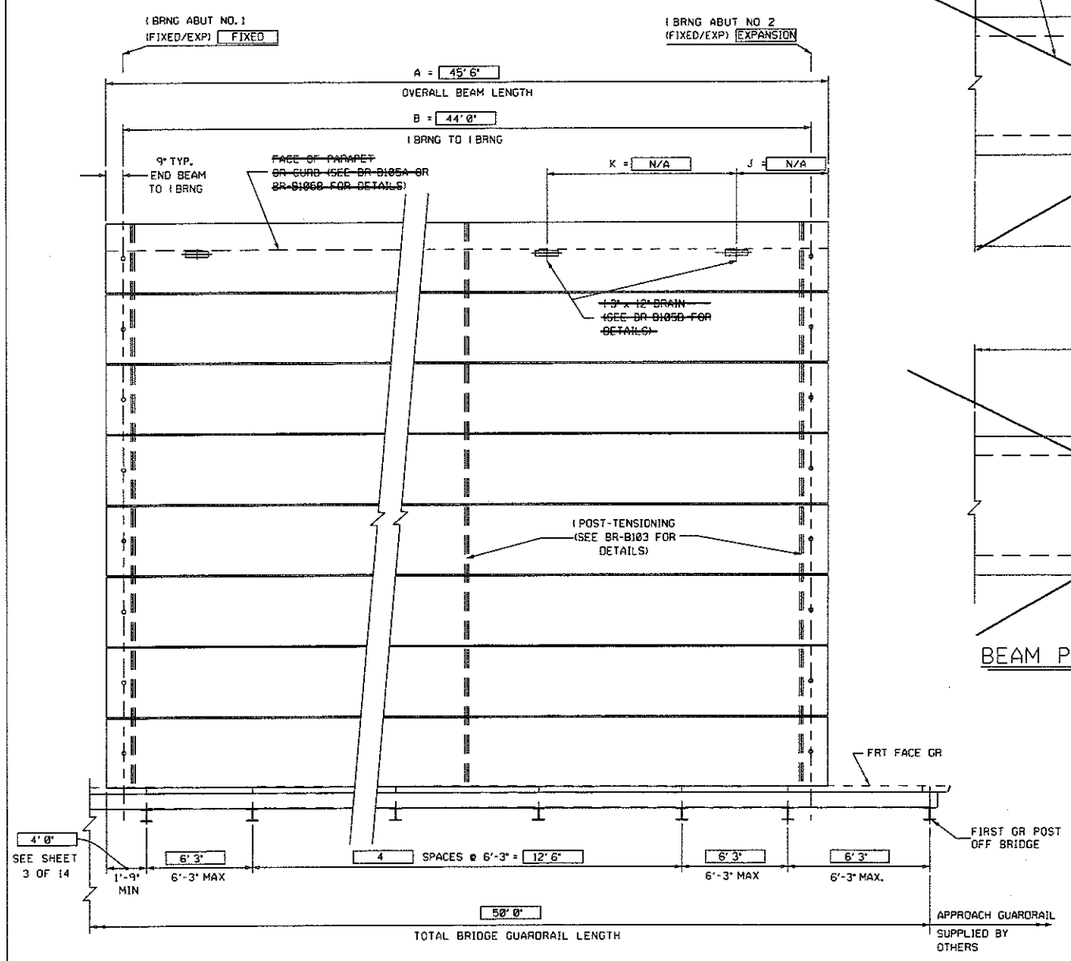


DECK PLAN VIEW

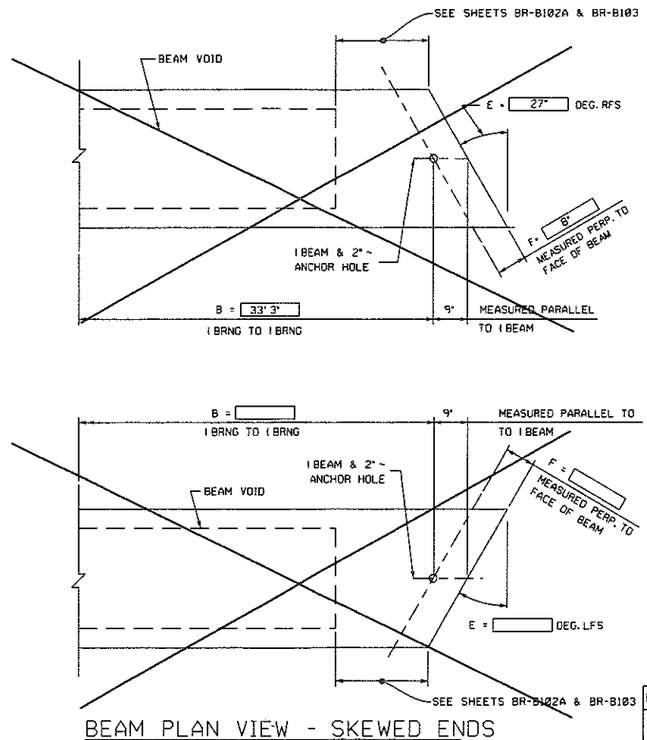


BEAM PLAN VIEW - SKEWED ENDS

| CONTROL DIMENSIONS | | |
|---|---|---|
| DESCRIPTION | CODE | VALUE |
| OVERALL BEAM LENGTH | A | 45' 6" |
| SPAN LENGTH, ℄ BEARING TO ℄ BEARING | B | 44' 0" |
| SUPERSTRUCTURE WIDTH - OUT TO OUT | C | - |
| ROADWAY WIDTH - FACE GR~~/PARAPET~~ TO FACE GR~~/PARAPET~~ | D | - |
| NUMBER OF BEAMS REQUIRED | — | 1 |
| BEAM SIZE (WIDTH x DEPTH) | — | 3' X 17" |
| SKEW ANGLE (NORMAL, DEG. RFS OR DEG. LFS) | E | - |
| PERPENDICULAR DISTANCE FROM FACE OF BEAM TO ℄ BEARING | F | 9" |
| HLBC WEARING COURSE REQUIRED (YES/NO) | — | YES |
| THICKNESS OF WEARING COURSE @ ℄ OF DECK OR ROADWAY | G | 1½" |
| THICKNESS OF WEARING COURSE @ EDGE OF DECK OR PARAPET | H | 1½" |
| TL-2 BRIDGE GUARDRAIL SYSTEM REQUIRED (YES/NO) | — | YES |
| FABRICATOR TO SUPPLY TL-2 BRIDGE GUARDRAIL (YES/NO) | — | YES |
| FABRICATOR TO INSTALL BRIDGE GUARDRAIL PRIOR TO SHIPMENT (YES/NO) (IF NO, FABRICATOR TO SHIP LOOSE) | — | YES |
| NUMBER OF GUARDRAIL POST INSERTS REQUIRED PER SIDE | — | 7 |
| TYPE F PARAPET REQUIRED (YES/NO) | — | NO |
| DRAINS REQUIRED (YES/NO) | — | NO |
| NUMBER OF DRAINS REQUIRED PER SIDE | — | — |
| 10" CURB REQUIRED (YES/NO) | | NO |
| | | |
| | | |
| | | |

ESTIMATE OF QUANTITIES

| ITEM NO. | DESCRIPTION | UNITS | QUANTITY |
|---|---|---|---|
| 603016-017 | PRESTRESSED CONCRETE BOX BEAM | LF | 45.5 |
| | | | |
| | | | |
| | | | |
| | | | |
| | | | |

NOTES:

1. WHEN BRIDGE GUARDRAIL IS TO BE SUPPLIED BY THE BEAM FABRICATOR, COST OF ALL BRIDGE GUARDRAIL ITEMS TO INCLUDE POSTS, RAIL ELEMENTS, ATTACHMENT HARDWARE, AND MISCELLANEOUS ITEMS NEEDED TO COMPLETELY INSTALL BRIDGE GUARDRAIL SHALL BE INCLUDED IN ITEM 603016 "PRESTRESSED CONCRETE BOX BEAM."
2. THIS SHEET SHALL BE USED IN CONJUNCTION WITH STANDARD SHEETS BR-B17A & B THRU BR-B42A & B, BR-B100, BR-B102A & B, BR-B103, BR-B104, ~~AND BR-B105A & B~~.

APPROVED: _____ DIRECTOR, ENGINEERING DIVISION DATE: _____

WEST VIRGINIA DEPARTMENT OF TRANSPORTATION
DIVISION OF HIGHWAYS
ENGINEERING DIVISION

PRESTRESSED BOX BEAM

SUPERSTRUCTURE LAYOUT

STANDARD SHEET BR-B101

PREPARED: 1-14-05

REVISED:

WEST VIRGINIA DEPARTMENT OF TRANSPORTATION
DIVISION OF HIGHWAYS
ENGINEERING DIVISION

WIDENING PLANS OF
MAXWELL RUN CONCRETE SLAB
ON U.S. 19 (F)
OVER MAXWELL RUN
LEWIS COUNTY

PRESTRESSED BOX BEAM
SUPERSTRUCTURE LAYOUT

DESIGNED BY: THB/GFL
DRAWN BY: THB/RMW
CHECKED BY: TM/GFL
REVIEWED BY: WRW
DATE: 07/10
SCALE: NO SCALE
SHEET NO 9 OF 13
BRIDGE NUMBER 21-19-27.22 (8036.1)

| STATE PROJECT NUMBER | FEDERAL PROJECT NUMBER | STATE DIST. NO. | COUNTY | SHEET NO. | TOTAL SHEETS |
|---|---|---|---|---|---|
| S321-19-27.22 | | 7 | LEWIS | 10 | 13 |

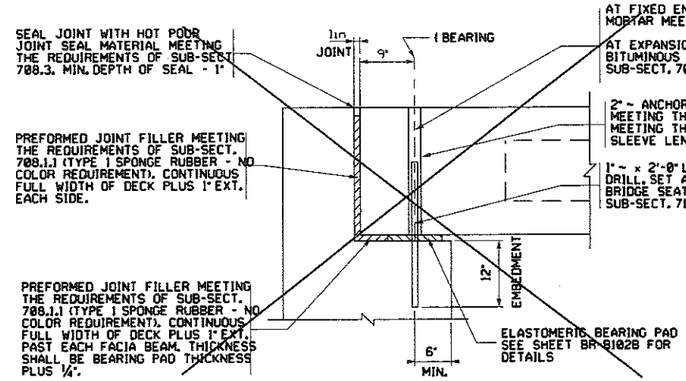


AT FIXED END FILL 2" ~ ANCHOR HOLE WITH PORTLAND CEMENT MORTAR MEETING THE REQUIREMENTS OF SUB-SECT. 715.5.

AT EXPANSION END FILL 2" ~ ANCHOR HOLE WITH HOT POUR BITUMINOUS JOINT FILLER MEETING THE REQUIREMENTS OF SUB-SECT. 708.3.

2" ~ ANCHOR SLEEVE. MATERIAL SHALL BE GALV. STEEL PIPE MEETING THE REQUIREMENTS OF AASHTO M232 OR PVC PIPE MEETING THE REQUIREMENTS OF SUB-SECTION 714.22. ANCHOR SLEEVE LENGTH SHALL BE DEPTH OF BEAM MINUS 3".

1" ~ x 2'-0" LONG GALV. NO. 8 DEFORMED REBAR (GR. 60). DRILL, SET AND GROUT EACH ANCHOR BOLT 1 FOOT INTO BRIDGE SEAT. GROUT SHALL BE IN ACCORDANCE WITH SUB-SECT. 715.5.

END BEARING DETAIL WITH BACKWALL

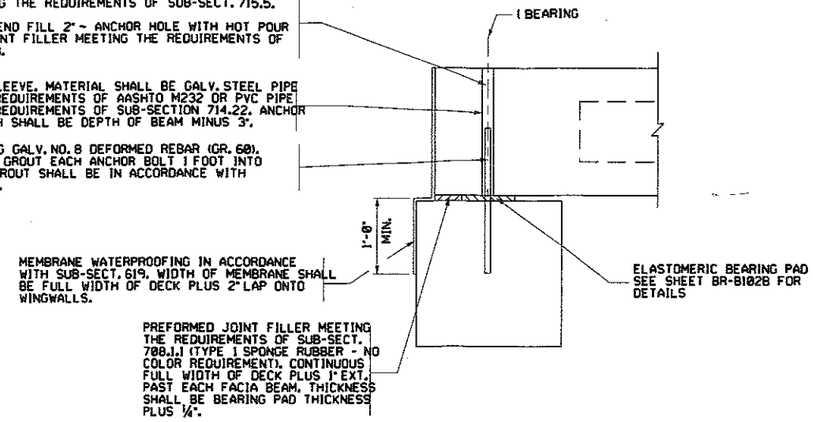


END BEARING DETAIL WITHOUT BACKWALL

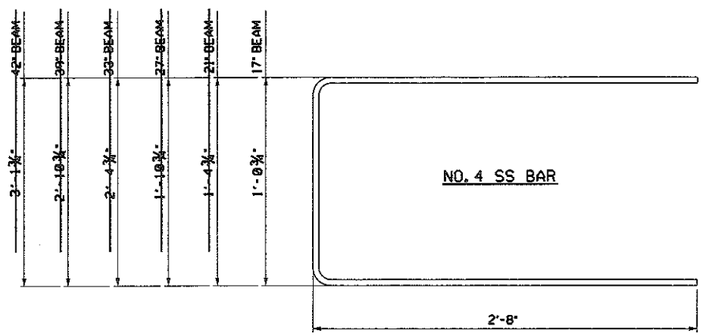


NO. 4 SS BAR

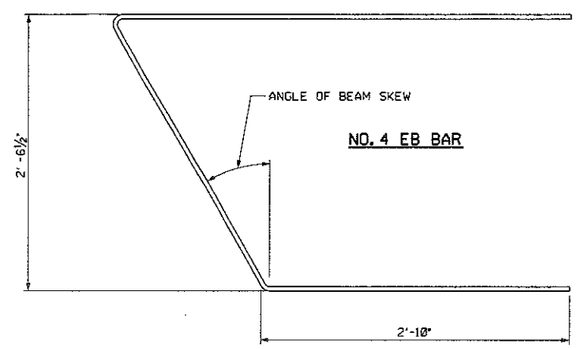


NO. 4 EB BAR

REINFORCING BAR DETAIL

SKEWED BEAMS

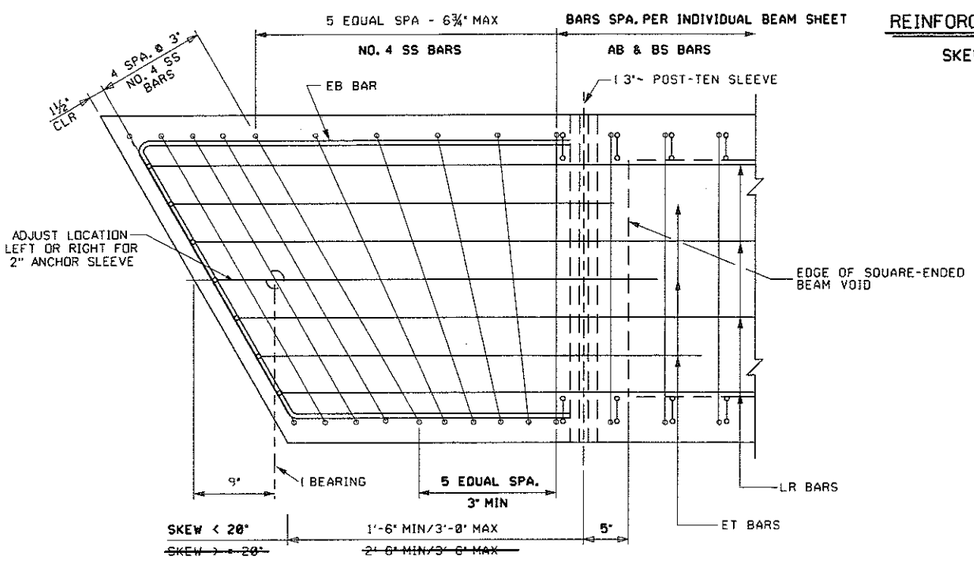


END BLOCK DETAIL - SKEWED BEAMS

WO/POST-TEN. ACCESS POCKET

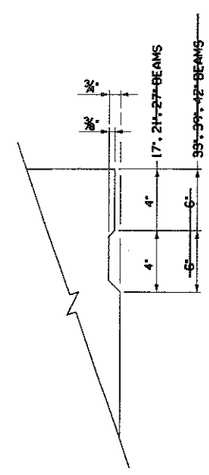


SHEAR KEY DETAIL

THIS SHEET SHALL BE USED IN CONJUNCTION WITH STANDARD SHEETS BR-B17A & B THRU BR-B42A & B, BR-B100, BR-B101, BR-B102B, BR-B103, BR-B104, ~~AND BR-B105A & B~~ AS APPROPRIATE.

LIFTING DETAILS

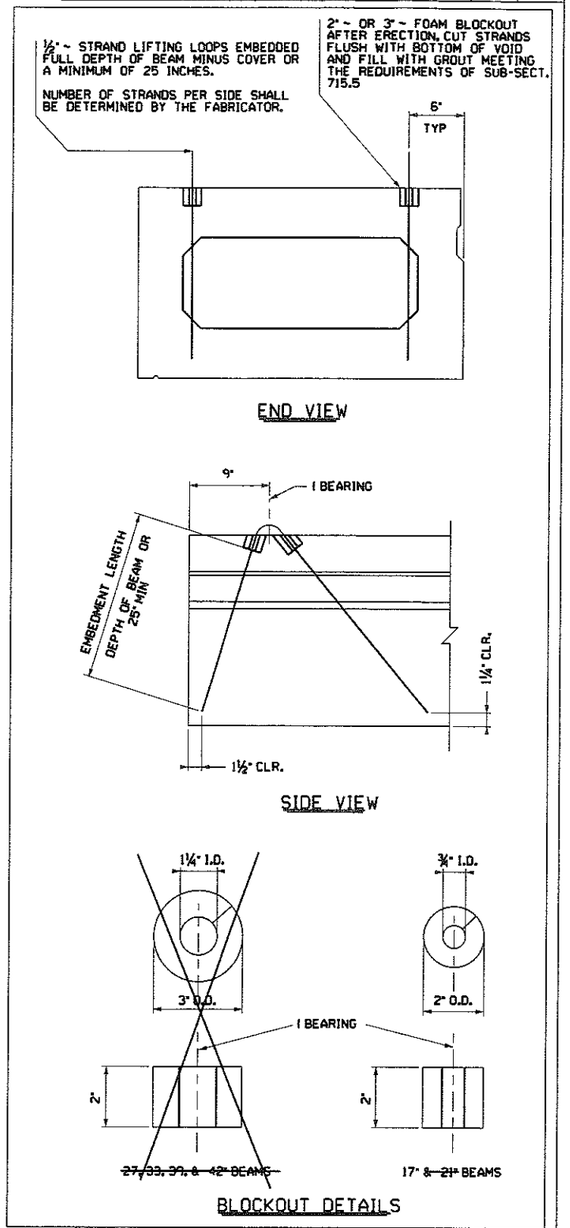


APPROVED: _____ DIRECTOR, ENGINEERING DIVISION DATE: _____

WEST VIRGINIA DEPARTMENT OF TRANSPORTATION
DIVISION OF HIGHWAYS
ENGINEERING DIVISION

PRESTRESSED CONCRETE BEAM
SKEW END REINFORCING
MISC. DESIGN AND ASSEMBLY DETAILS

*STANDARD SHEET BR-B102A*

PREPARED: 1-14-05

REVISED:

WEST VIRGINIA DEPARTMENT OF TRANSPORTATION
DIVISION OF HIGHWAYS
ENGINEERING DIVISION

WIDENING PLANS OF
MAXWELL RUN CONCRETE SLAB
ON U.S. 19 (F)
OVER MAXWELL RUN
LEWIS COUNTY

PRESTRESSED CONCRETE BEAM
SKEWED END REINFORCING
MISC. DESIGN AND ASSEMBLY DETAILS

| | |
|---|---|
| DESIGNED BY: THB/ | GFL |
| DRAWN BY: THB/ | RMW |
| CHECKED BY: TM/ | GFL |
| REVIEWED BY: | WRW |
| DATE: | 07/10 |
| SCALE: | NO SCALE |
| SHEET NO 10 OF 13 | |
| BRIDGE NUMBER | 21-19-27.22 (8036.1) |

| STATE PROJECT NUMBER | FEDERAL PROJECT NUMBER | STATE DIST. NO. | COUNTY | SHEET NO. | TOTAL SHEETS |
|---|---|---|---|---|---|
| S321-19-27.22 | | 7 | LEWIS | 11 | 13 |

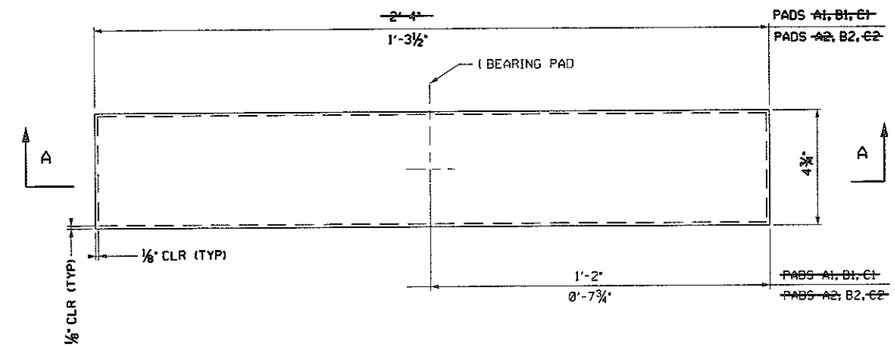


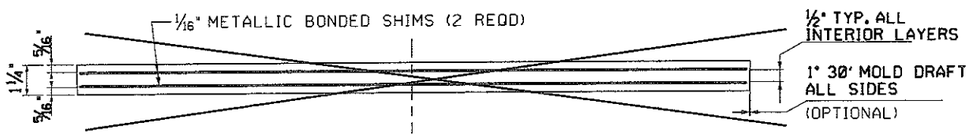


SECTION A-A
PADS A1-A2

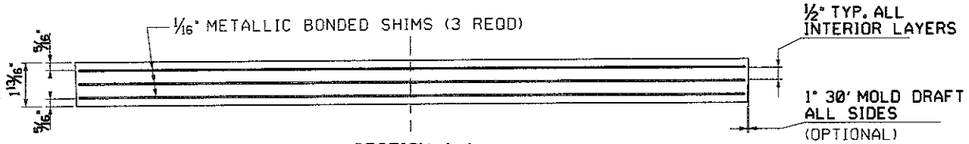


SECTION A-A
PADS B1-B2

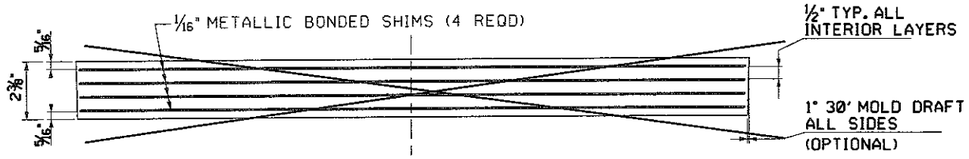


SECTION A-A
PADS C1-C2

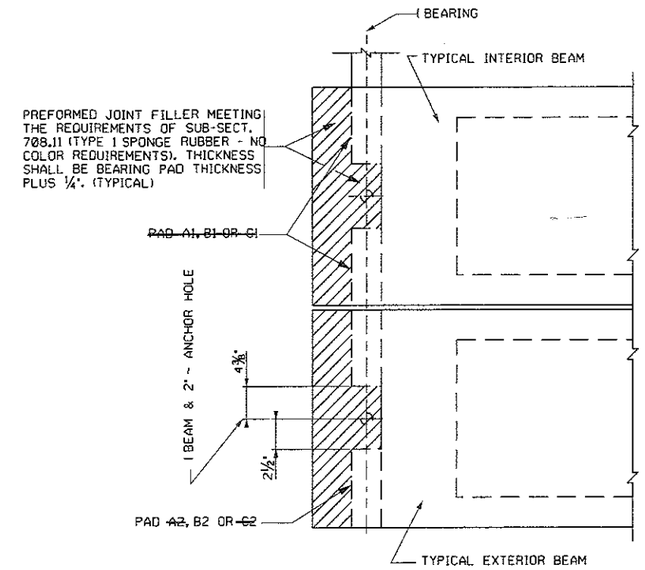


PLAN VIEW - BEARING PLACEMENT
NORMAL BEAMS

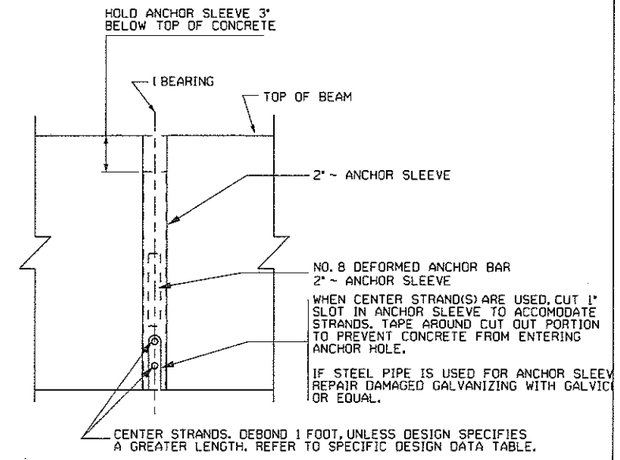


ANCHOR SLEEVE DETAIL

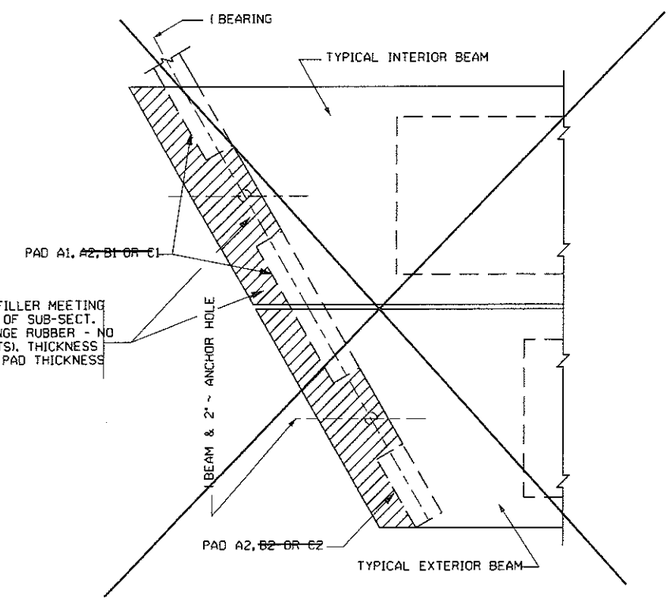


PLAN VIEW - BEARING PLACEMENT
SKEWED BEAMS

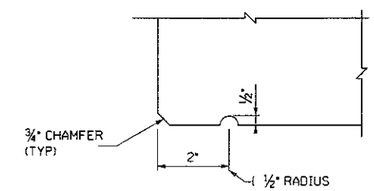


DRIP GROOVE DETAIL
EXTERIOR BEAMS

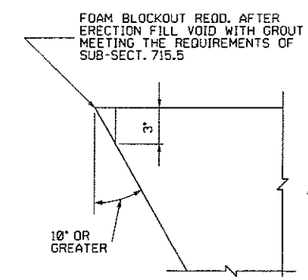


SKEW BLOCKOUT DETAIL

## NOTES:

1. ELASTOMERIC BEARING PADS ARE DESIGNED IN ACCORDANCE WITH DESIGN METHOD B CONTAINED IN SECTION 14 OF THE AASHTO LRFD BRIDGE DESIGN SPECIFICATIONS. FABRICATION SHALL BE IN ACCORDANCE WITH SECTION 18 OF THE AASHTO LRFD BRIDGE CONSTRUCTION SPECIFICATIONS.
2. ALL BEARINGS ARE DESIGNED FOR A LOW TEMPERATURE ZONE C AND SHALL HAVE A DUROMETER HARDNESS OF 60. METALLIC REINFORCEMENT SHALL HAVE A MINIMUM YIELD STRENGTH OF 36 KSI.
3. BEARING PADS ARE DESIGNED FOR ZERO BRIDGE GRADE. FOR BRIDGE GRADES GREATER THAN 5 %, PADS SHALL BE SPECIFICALLY DESIGNED FOR THE GRADE. AS AN ALTERNATE, CAST-IN-PLACE BEVELED SOLE PLATES MAY BE USED.
4. DESIGNER, FABRICATOR AND ERECTOR SHALL BE AWARE THAT SKEWED END BEAMS MAY TWIST OR WARP, CAUSING UNEVEN BEAM SEATING AT THE BEARINGS. THE CONTRACTOR IS REQUIRED TO CORRECT AT THE TIME OF ERECTION, BEFORE THE BEAMS ARE SECURED IN PLACE. METHOD OF CORRECTION SHALL PROVIDE AN EVEN, TOTAL BEARING AND A LEVEL TOP BEAM SURFACE. TOLERANCE AFTER CORRECTION SHALL BE ⅛ INCH. THE FABRICATOR SHALL NOTIFY THE CONTRACTOR AND DESIGNER IF CORRECTIONS ARE REQUIRED PRIOR TO SHIPMENT.
5. FOR BEAMS WITH STEPPED ENDS USE PADS ~~A2, B2, OR~~ C2 ON BOTH SIDES OF EACH BEAM.
6. ELASTOMERIC BEARING PADS SHALL BE INCLUDED IN THE PRICE OF THE BEAMS.
7. THIS SHEET SHALL BE USED IN CONJUNCTION WITH STANDARD SHEETS BR-817A & B THRU BR-842A & B, BR-B100, BR-B101, BR-B102A, BR-B103, BR-B104, ~~AND BR-B105A & B~~ AS APPROPRIATE.

BOX BEAM BEARING PAD CONTROL DIMENSIONS

| PAD | LENGTH | WIDTH | HEIGHT | NO. SHIMS | SHIM SIZE | SPAN RANGES | MAXIMUM REACTION | MAXIMUM MOVEMENT ONE DIRECTION |
|---|---|---|---|---|---|---|---|---|
| ~~A1~~ | ~~4¾"~~ | ~~20"~~ | ~~1¼"~~ | ~~2~~ | ~~1/16" × 4½" × 2'-3¾"~~ | ~~20' - 38'~~ | ~~55 KIPS~~ | ~~0.39"~~ |
| ~~B1~~ | ~~4¾"~~ | ~~20"~~ | ~~1 13/16"~~ | ~~3~~ | ~~1/16" × 4½" × 2'-3¾"~~ | ~~40' - 78'~~ | ~~75 KIPS~~ | ~~0.80"~~ |
| ~~C1~~ | ~~4¾"~~ | ~~20"~~ | ~~2⅜"~~ | ~~4~~ | ~~1/16" × 4½" × 2'-3¾"~~ | ~~80' - 100'~~ | ~~89 KIPS~~ | ~~1.02"~~ |
| ~~A2~~ | ~~4¾"~~ | ~~15½"~~ | ~~1¼"~~ | ~~2~~ | ~~1/16" × 4½" × 1'-3¼"~~ | ~~20' - 36'~~ | ~~28 KIPS~~ | ~~0.39"~~ |
| B2 | 4¾" | 15½" | 1 13/16" | 3 | 1/16" × 4½" × 1'-3¼" | 40' - 78' | 38 KIPS | 0.80" |
| ~~C2~~ | ~~4¾"~~ | ~~15½"~~ | ~~2⅜"~~ | ~~4~~ | ~~1/16" × 4½" × 1'-3¼"~~ | ~~80' - 100'~~ | ~~45 KIPS~~ | ~~1.02"~~ |

APPROVED: ~~DIRECTOR, ENGINEERING DIVISION~~ DATE: ~~~~

WEST VIRGINIA DEPARTMENT OF TRANSPORTATION
DIVISION OF HIGHWAYS
ENGINEERING DIVISION

PRESTRESSED CONCRETE BEAM
ELASTOMERIC BEARING PAD DETAILS
MISC. DESIGN AND ASSEMBLY DETAILS

*STANDARD SHEET BR-B102B*

PREPARED: 1-14-05
REVISED:

WEST VIRGINIA DEPARTMENT OF TRANSPORTATION
DIVISION OF HIGHWAYS
ENGINEERING DIVISION

WIDENING PLANS OF
MAXWELL RUN CONCRETE SLAB
ON U.S. 19 (F)
OVER MAXWELL RUN
LEWIS COUNTY

PRESTRESSED CONCRETE BEAM
ELASTOMERIC BEARING PAD DETAILS
MISC. DESIGN AND ASSEMBLY DETAILS

DESIGNED BY: THB/ GFL
DRAWN BY: THB/ RMW
CHECKED BY: TM/ GFL
REVIEWED BY: WRW
DATE: 07/10
SCALE: NO SCALE
SHEET NO 11 OF 13
BRIDGE NUMBER 21-19-27.22 (8036.1)

| STATE PROJECT NUMBER | FEDERAL PROJECT NUMBER | STATE DIST. NO. | COUNTY | SHEET NO. | TOTAL SHEETS |
|---|---|---|---|---|---|
| S321-09-27.22 | | 7 | LEWIS | 12 | 13 |

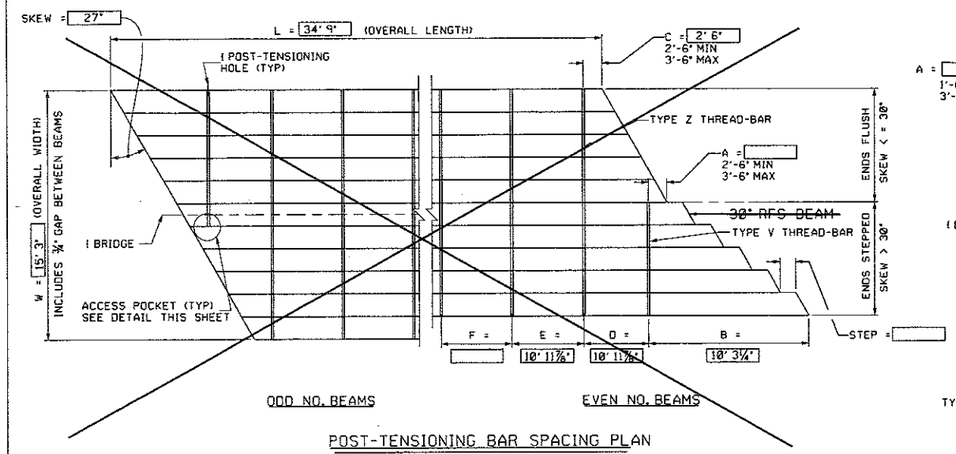


POST-TENSIONING BAR SPACING PLAN

SKEW > = 20°

**SEE SHEET 5 OF 15 FOR DETAILS**

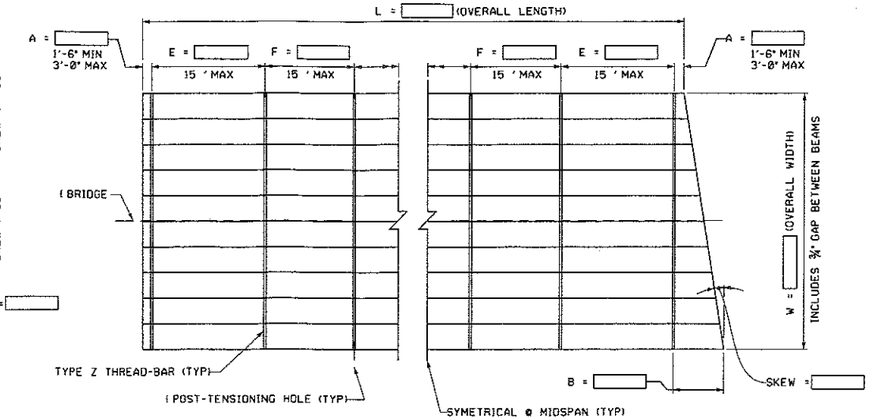


POST-TENSIONING BAR SPACING PLAN

NORMAL OR SKEW < 20°

SEE 3 OF 14 FOR DETAILS

REFER TO STANDARD SHEET BR-B102A FOR SHEAR KEY DETAILS.

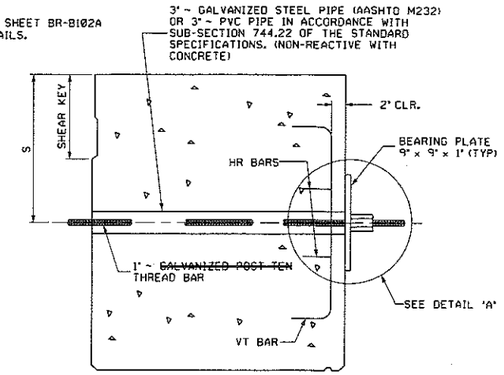


POST-TENSIONING BAR DETAILS

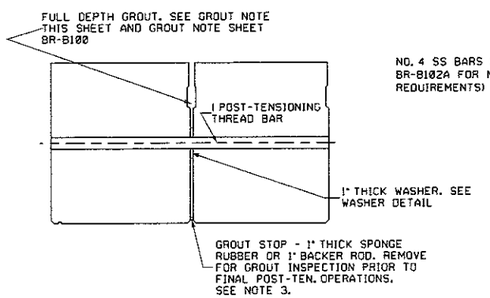


GROUT DETAILS

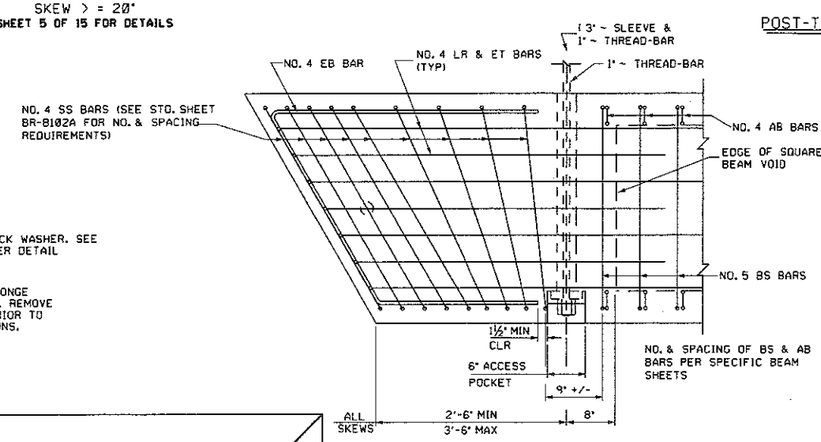


SHEAR REINFORCEMENT DETAIL

BEAMS WITH ACCESS POCKETS

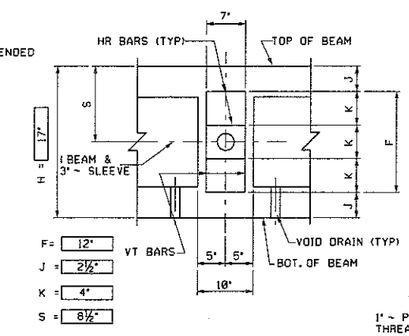


REINFORCING DETAILS @ DIAPHRAGM

EXTERIOR BEAM & POCKETS ONLY

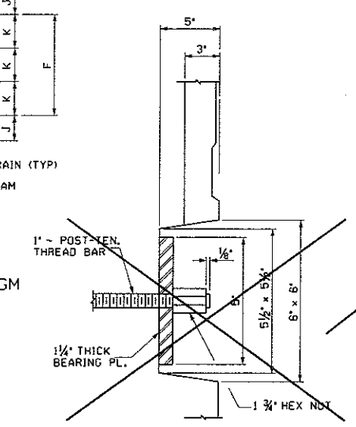


DETAIL "B"

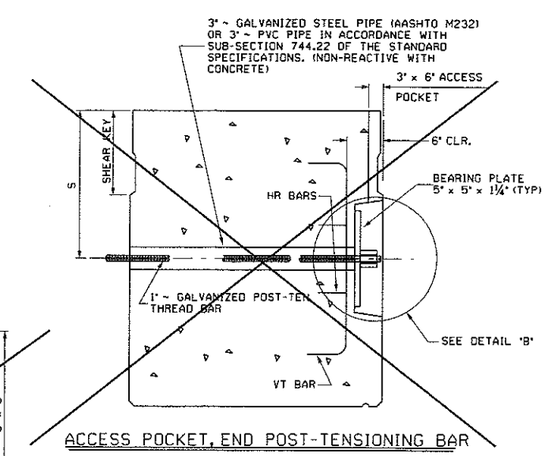


ACCESS POCKET, END POST-TENSIONING BAR

## PROCEDURE NOTES

1. INSTALL ONE INCH THICK WASHER AND GROUT STOP BY GLUING TO ONE SIDE. FOR THE ENTIRE LENGTH OF EACH BEAM PRIOR TO SEETING BEAMS. GLUE SHALL BE AN APPROVED CONSTRUCTION TYPE GLUE OR EPOXY ADHESIVE. GROUT STOP MAY BE INSTALLED AFTER BEAMS ARE SET.

2. GLUE A ¾" x 2" x 2" PIECE OF PRESSURE TREATED PLYWOOD AT EACH THREAD-BAR LOCATION TO INSURE THAT A ¾" GAP IS OBTAINED. PLYWOOD SPACERS TO BE OFFSET APPROXIMATELY 2 FEET FROM THE THREAD-BAR HOLE AND CENTERED ON THE HOLE DEPTH. PLYWOOD SPACERS ARE REQUIRED ON ONLY ONE BEAM EDGE FACE OF ABUTTING BEAMS. AFTER THE BEAMS ARE SET AND THE THREAD-BARS INSTALLED, PULL THE ENTIRE SUPERSTRUCTURE TOGETHER BY APPLYING A POST-TENSIONING FORCE OF APPROXIMATELY 3000 POUNDS. AT THIS STAGE THE GAP BETWEEN BEAMS SHALL BE A UNIFORM ¾" WITH ALL SWEEP REMOVED. RECORD THE ACTUAL FORCE APPLIED.

3. FILL THE GAP BETWEEN BEAMS AND SHEAR KEY FULL DEPTH WITH THE PRE-APPROVED, PRE-TESTED GROUT MIXTURE. FROM EACH BATCH, PREPARE JOB CONTROL GROUT CUBES FOR THREE AND SEVEN DAY TESTS. THESE JOB CONTROL SAMPLES WILL BE USED TO DETERMINE WHEN THE GROUT HAS ATTAINED A MINIMUM COMPRESSIVE STRENGTH OF 4500 PSI. A MINIMUM OF THREE SPECIMENS PER TEST SHALL BE OBTAINED, AND THE AVERAGE OF THE TEST RESULTS USED. ACCEPTANCE SAMPLING AND TESTING OF THE GROUT IS THE RESPONSIBILITY OF THE CONTRACTOR; HOWEVER, A REPRESENTATIVE OF THE WVDOH SHALL WITNESS ALL OF THE ACCEPTANCE SAMPLING AND TESTING.

   TEST PROCEDURE SHALL BE ASTM C109 AS MODIFIED BY ASTM C1107. IN NO INSTANCE SHALL THE CONTRACTOR PROCEED WITH POST-TENSIONING OR OTHER BEAM ERECTION PROCEDURES UNTIL THE REQUIRED MINIMUM GROUT STRENGTH IS ATTAINED AND VERIFIED BY THE ENGINEER. IN THE EVENT THAT THE MINIMUM GROUT STRENGTH IS NOT ATTAINED, THE ENGINEER SHALL BE NOTIFIED AND CORRECTIVE ACTION TAKEN AT THE DIRECTION OF THE ENGINEER. SEE SHEAR KEY GROUT NOTE, SHEET BR-B100 FOR ADDITIONAL REQUIREMENTS.

   AFTER THE GROUT HAS REACHED AN INITIAL SET CONDITION AND PRIOR TO ANY FINAL POST-TENSIONING PROCEDURES, THE CONTRACTOR SHALL REMOVE THE GROUT STOP AND INSPECT THE GROUT FOR VOIDS OR OTHER IRREGULARITIES. ANY VOIDS DEEPER THAN 2" FROM THE BOTTOM SHALL BE REGROUTED IN A MANNER ACCEPTABLE TO THE ENGINEER.

4. AFTER GROUT AS BEEN PLACED AND REACHED IT'S MINIMUM COMPRESSIVE STRENGTH OF 4500 PSI AND HAS CURED A MINIMUM OF 3 DAYS, APPLY 50% OF THE FINAL POST-TENSIONING FORCE TO ALL THREAD-BARS, WORKING BEAM ENDS TO MIDSPAN. AFTER ALL THREAD-BARS HAVE BEEN TENSIONED TO 50%, APPLY THE REMAINING PERCENTAGE OF FINAL POST-TENSIONING FORCE, WORKING IN THE SAME SEQUENCE AS THE FIRST STAGE OF FINAL TENSIONING.

5. MEASURE AND RECORD, IN THE ELONGATION TABLE, THIS SHEET, THE ACTUAL TOTAL ELONGATION OF EACH THREAD-BAR. COMPARE THE MEASURED ELONGATION TO THE CALCULATED ELONGATION. A SIGNIFICANT DIFFERENCE BETWEEN MEASURED AND CALCULATED ELONGATIONS COULD INDICATE IMPROPER JACKING TECHNIQUES, FAULTY MATERIALS, FAULTY JACKS, OR IMPROPERLY CALIBRATED JACKS. IF THE DIFFERENCE IS GREATER THAN 15%, THEN THE JACK SHALL BE RE-CALIBRATED AND THE JACKING TECHNIQUES EVALUATED. IF, AFTER THE ABOVE STEPS ARE TAKEN, THE PERCENTAGE DIFFERENCE IS GREATER THAN 10%, THEN THE ENGINEER SHALL BE NOTIFIED AND CORRECTIVE ACTION TAKEN AT THE DIRECTION OF THE ENGINEER. ALL COSTS INVOLVED IN CORRECTION SHALL BE AT THE CONTRACTORS EXPENSE.

6. USING SAW, TRIM EXCESS THREAD-BAR LEAVING 4" TO 6" PAST THE NUT. DO NOT TRIM THREAD-BARS BY TORCH CUTTING. TOUCH-UP TRIMMED ENDS WITH GALVICON OR EQUAL.

7. INSTALL ANCHOR DOWELS AS DETAILED ON STANDARD SHEETS BR-B101 AND BR-B102A.

FINAL POST-TENSIONING FORCE
~~TYPE Z BARS = 80 KIPS~~
~~TYPE V BARS = 40 KIPS~~

POST-TENSIONING BAR LAYOUT SCHEDULE

| | | | |
|---|---|---|---|
| SPAN | | | |
| SKEW | | | |
| L | | | |
| W | | | |
| A | | | |
| B | | | |
| C | | | |
| D | | | |
| E | | | |
| F | | | |
| STEP | | | |

SEE SHEET 3 OF 14 FOR DETAILS

DIMENSIONS

| BEAM SIZE | REINFORCEMENT DIM | SPACING | | | BAR DIST |
|---|---|---|---|---|---|
| H | F | J | K | S | |
| IN. | IN. | IN. | IN. | IN. | |
| 17 | 12 | 2½ | 4 | 8½ | |
| ~~21~~ | ~~12~~ | ~~4½~~ | ~~4~~ | ~~10½~~ | |
| ~~27~~ | ~~18~~ | ~~4½~~ | ~~6~~ | ~~13½~~ | |
| ~~33~~ | ~~24~~ | ~~4½~~ | ~~8~~ | ~~16½~~ | |
| ~~39~~ | ~~30~~ | ~~4½~~ | ~~10~~ | ~~19½~~ | |
| ~~42~~ | ~~33~~ | ~~4½~~ | ~~11~~ | ~~21~~ | |

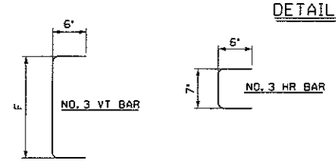


REINFORCING BAR DETAIL

ALL BARS GR 60 , EPOXY COATED

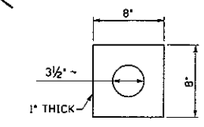


WASHER DETAIL

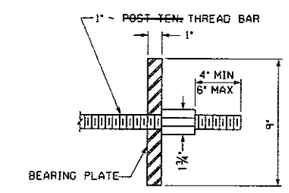


DETAIL "A"

SPACE POST-TENSIONING THREAD BARS TO AVOID CONFLICT WITH GUARDRAIL INSERTS.

THIS SHEET SHALL BE USED IN CONJUNCTION WITH STANDARD SHEETS BR-B17A & B THRU BR-B42A & B, BR-B100, BR-B101, BR-B102A & B, BR-B104, ~~AND BR-B105A & B~~.

GROUT STRENGTH TABLE

| | 3 DAY (PSI) | 7 DAY (PSI) |
|---|---|---|
| PRE-TEST STRENGTH | | |
| JOB CONTROL STRENGTH | | |
| GROUT TYPE & MANUFACTURER | | |

POST-TENSIONING BAR LENGTH

| BAR | FORMULA | LENGTH |
|---|---|---|
| ~~Y (EVEN)~~ | ~~W/2 + 3'~~ | |
| ~~Z~~ | ~~W + 3'~~ | |
| ~~Y (ODD)~~ | ~~W/2 + 6'~~ | |

ELONGATION (INCHES)

| BAR | CODE | CALC. | MEASURED NO. 1 | NO. 2 | NO. 3 | NO. 4 | NO. 5 | NO. 6 | NO. 7 | NO. 8 | NO. | NO. |
|---|---|---|---|---|---|---|---|---|---|---|---|---|
| ~~Z~~ | ~~X~~ | ~~5/8"~~ | | | | | | | | | | |
| ~~Y~~ | ~~Y~~ | ~~1/8"~~ | | | | | | | | | | |

CALCULATED (X) = (W/FT.) / 24.8
CALCULATED (Y) = (W/FT.) / 99.2

ODD NO. BEAMS
~~CALCULATED (Y) = (W/FT.) + 31 / 99.2~~

SPECIAL WARNING NOTES

1. DO NOT STAND IN LINE WITH THE POST-TENSIONING BAR DURING TENSIONING PROCEDURES.

2. NUTS, COUPLERS AND EXTENSION RODS USED IN THE POST-TENSIONING WORK SHALL BE THE MATERIAL APPROVED BY THE MANUFACTURER OF THE HIGH STRENGTH POST-TENSIONING RODS. IN NO CASE SHALL THE CONTRACTOR USE NON-APPROVED MATERIAL OR MATERIAL FROM TWO DIFFERENT SOURCES.

DIRECTOR, ENGINEERING DIVISION — DATE:

WEST VIRGINIA DEPARTMENT OF TRANSPORTATION
DIVISION OF HIGHWAYS
ENGINEERING DIVISION

PREPARED: 1-14-05
REVISED:

PRESTRESSED CONCRETE BEAM

TRANSVERSE POST-TENSIONING DETAILS

*STANDARD SHEET BR-B103*

WEST VIRGINIA DEPARTMENT OF TRANSPORTATION
DIVISION OF HIGHWAYS
ENGINEERING DIVISION

WIDENING PLANS OF
MAXWELL RUN CONCRETE SLAB
ON U.S. 19 (F)
OVER MAXWELL RUN
LEWIS COUNTY

PRESTRESSED CONCRETE BEAM

TRANSVERSE POST-TENSIONING DETAILS

| | |
|---|---|
| DESIGNED BY: THB/ GFL | |
| DRAWN BY: THB/ RMW | |
| CHECKED BY: TM/ GFL | |
| REVIEWED BY: WRW | |
| DATE: 07/10 | |
| SCALE: NO SCALE | |
| SHEET NO 12 OF 13 | |
| BRIDGE NUMBER | 21-19-27.22 (8036.1) |

| STATE PROJECT NUMBER | FEDERAL PROJECT NUMBER | STATE DIST. NO. | COUNTY | SHEET NO. | TOTAL SHEETS |
|---|---|---|---|---|---|
| S321-19-27.22 | | 7 | LEWIS | 13 | 13 |

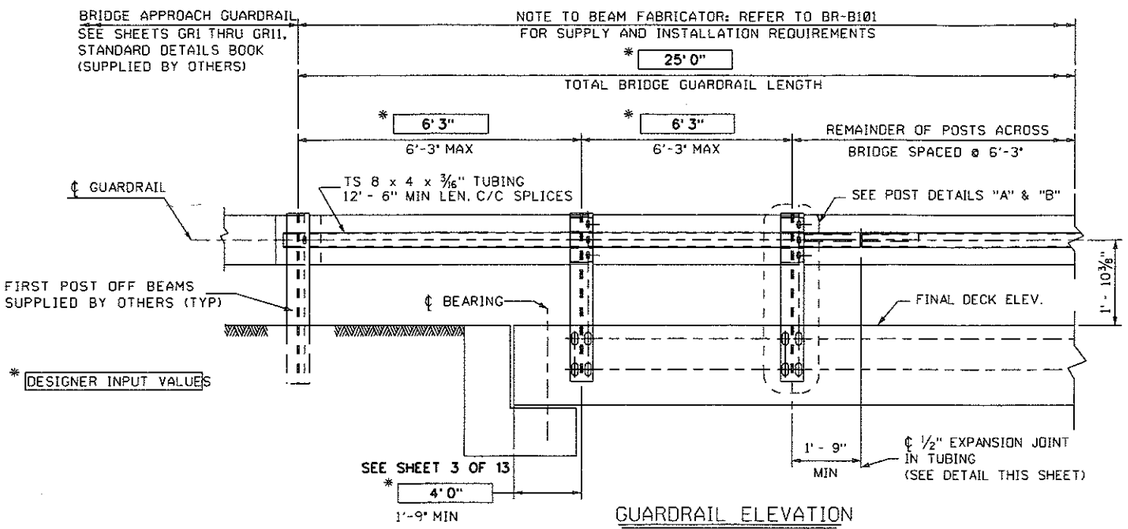


GUARDRAIL ELEVATION

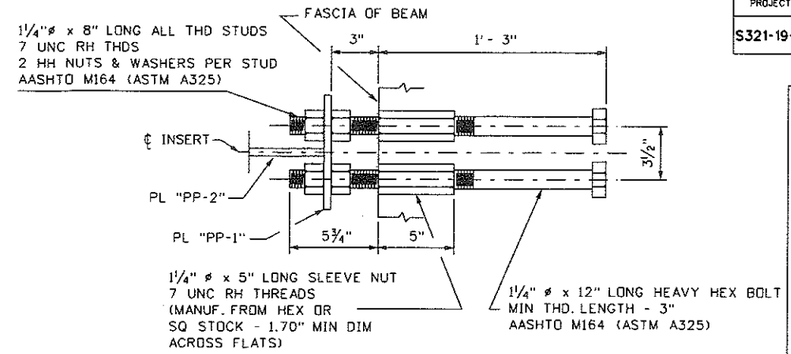


TYPE "1A" ANCHOR DETAIL

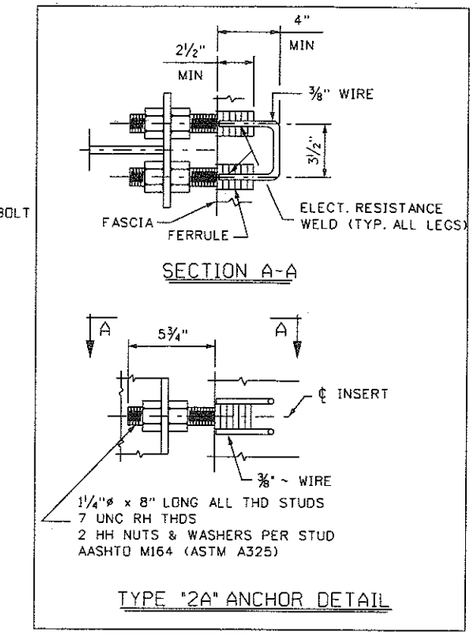


GUARDRAIL POSTS, SETOUTS, AND BLOCKOUTS SHALL BE ATTACHED TO THE EXTERIOR BEAMS BY FABRICATOR. FABRICATOR SHALL ALSO ATTACH ALL GUARDRAIL AND REINFORCEMENT TUBING THAT DOES NOT INTERFERE WITH THE SHIPMENT OF THE BEAMS

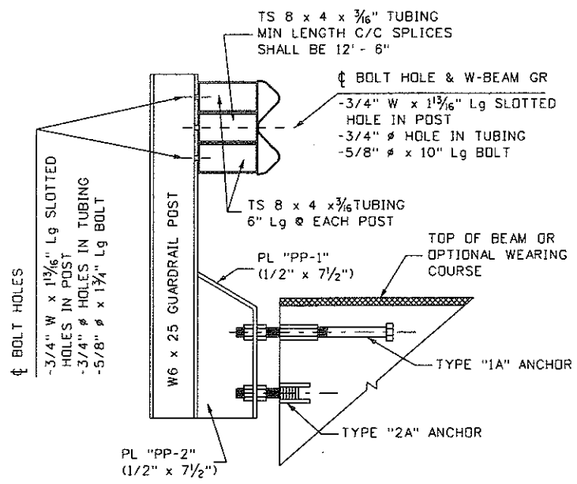


GUARDRAIL POST DETAIL "A"

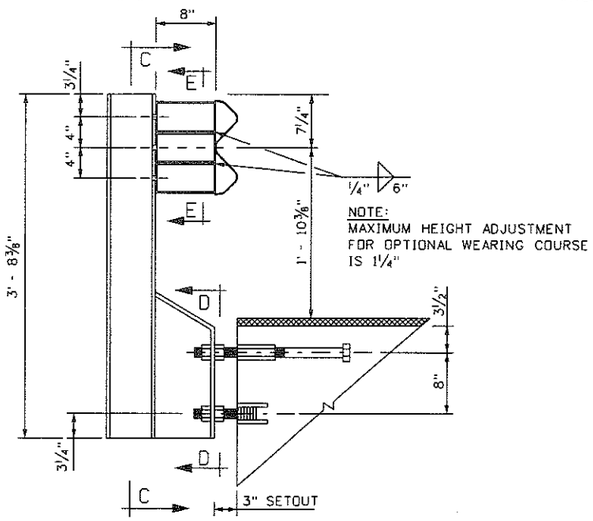


GUARDRAIL POST DETAIL "B"

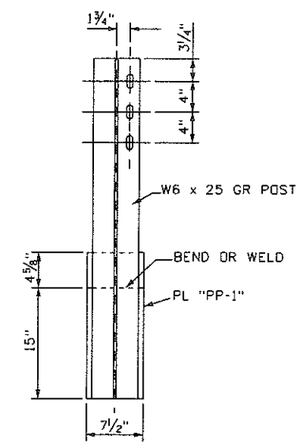


SECTION C-C

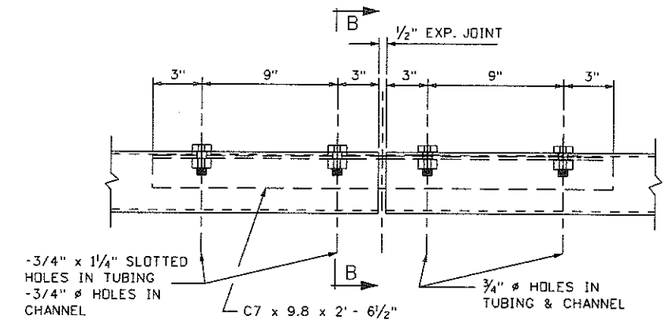


TUBING SPLICE/EXPANSION JOINT DETAIL

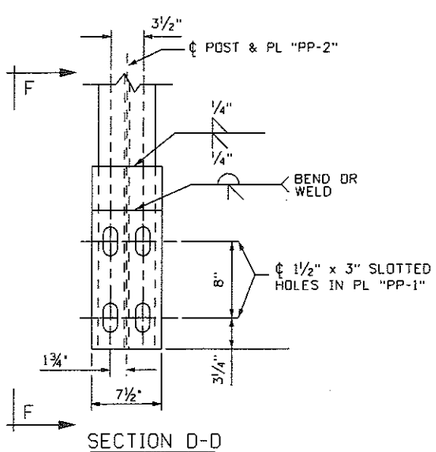


SECTION D-D

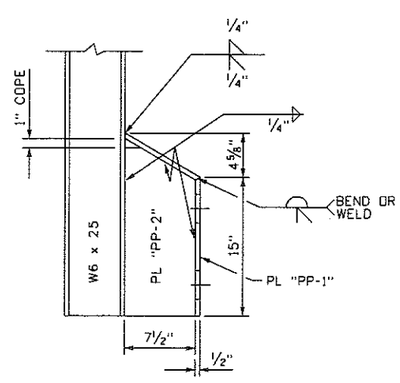


SECTION F-F

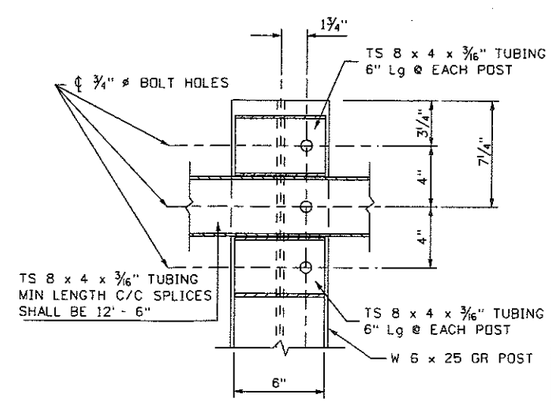


SECTION E-E

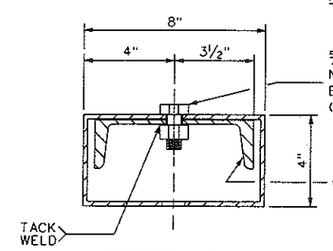


SECTION B-B

THIS SHEET SHALL BE USED IN CONJUNCTION WITH STAND SHEETS BR-B17A & B THRU BR-B42A & B, BR-B100, BR-B10 BR-B102A & B, AND BR-B103 AS APPLICABLE.

APPROVED: ---------- DIRECTOR, ENGINEERING DIVISION ---------- DATE:

WEST VIRGINIA DEPARTMENT OF TRANSPORTATION
DIVISION OF HIGHWAYS
ENGINEERING DIVISION

PRESTRESSED CONCRETE BEAM TYPE TL-2 GUARDRAIL SYSTEM DESIGN & ASSEMBLY DETAILS

*STANDARD SHEET BR-B104*

PREPARED: 1-14-05

REVISED:

WEST VIRGINIA DEPARTMENT OF TRANSPORTATION
DIVISION OF HIGHWAYS
ENGINEERING DIVISION

WIDENING PLANS OF
MAXWELL RUN CONCRETE SLAB
ON U.S. 19 (F)
OVER MAXWELL RUN
LEWIS COUNTY

PRESTRESSED CONCRETE BEAM TYPE TL-2 GUARDRAIL SYSTEM DESIGN & ASSEMBLY DETAILS

| | |
|---|---|
| DESIGNED BY: THB/ GFL | |
| DRAWN BY: THB/ RMW | |
| CHECKED BY: TM/GFL | |
| REVIEWED BY: WRW | |
| DATE: 07/10 | |
| SCALE: NO SCALE | |
| SHEET NO 13 OF 13 | |
| BRIDGE NUMBER 21-19-27.22 (B036.1) | |