West Virginia
Purchasing Division
2019 Washington Street, East
Charleston, WV 25305
Telephone: 304-558-2306
General Fax: 304-558-6026
Bid Fax: 304-558-3970

The following documentation is an electronically-submitted vendor response to an advertised solicitation from the *West Virginia Purchasing Bulletin* within the Vendor Self-Service portal at ***wvOASIS.gov***. As part of the State of West Virginia's procurement process, and to maintain the transparency of the bid-opening process, this documentation submitted online is publicly posted by the West Virginia Purchasing Division at ***WVPurchasing.gov*** with any other vendor responses to this solicitation submitted to the Purchasing Division in hard copy format.

Header 1

List View

General Information | Contact | Default Values | Discount | Document Information | Clarification Request

Procurement Folder: 2046656
Procurement Type: Central Purchase Order
Vendor ID: 000000206945
Legal Name: MCCLANAHAN CONSTRUCTION CO LLC
Alias/DBA:
Total Bid: $375,351.00
Response Date: 09/10/2026
Response Time: 9:10
Responded By User ID: mcclanahancc
First Name: Bruce
Last Name: McClanahan
Email: bruce@mcclanahanconstru
Phone: 304-776-3355

SO Doc Code: CRFQ
SO Dept: 0603
SO Doc ID: ADJ2700000020
Published Date: 9/4/26
Close Date: 9/10/26
Close Time: 13:30
Status: Closed
Solicitation Description: Williamstown Drainage Repairs (Construction)
Total of Header Attachments: 1
Total of All Attachments: 1

Department of Administration **Purchasing Division** **2019 Washington Street East** **Post Office Box 50130** **Charleston, WV 25305-0130**	**State of West Virginia** **Solicitation Response**

Proc Folder:	2046656
Solicitation Description:	Williamstown Drainage Repairs (Construction)
Proc Type:	Central Purchase Order

Solicitation Closes	Solicitation Response	Version
2026-09-10 13:30	SR 0603 ESR09102600000001972	1

VENDOR
000000206945 MCCLANAHAN CONSTRUCTION CO LLC

Solicitation Number: CRFQ 0603 ADJ2700000020

Total Bid: 375351 **Response Date:** 2026-09-10 **Response Time:** 09:10:53

Comments:

FOR INFORMATION CONTACT THE BUYER
David H Pauline
304-558-0067
david.h.pauline@wv.gov

Vendor
Signature X **FEIN#** **DATE**

All offers subject to all terms and conditions contained in this solicitation

Line	Comm Ln Desc	Qty	Unit Issue	Unit Price	Ln Total Or Contract Amount
1	Williamstown Drainage Repairs (Construction)				375351.00

Comm Code	Manufacturer	Specification	Model #
72141205			

Commodity Line Comments:

Extended Description:

Provide and furnish all labor, materials, tools, expendable equipment and all services to complete Williamstown Drainage Repairs, near Williamstown WV per the attached specifications and documentation.

Department of Administration Purchasing Division 2019 Washington Street East Post Office Box 50130 Charleston, WV 25305-0130	**State of West Virginia** **Centralized Request for Quote** **Construction**

Proc Folder: 2046656 **Doc Description:** Williamstown Drainage Repairs (Construction) **Proc Type:** Central Purchase Order			**Reason for Modification:**
Date Issued	**Solicitation Closes**	**Solicitation No**	**Version**
2026-08-20	2026-09-10 13:30	CRFQ 0603 ADJ2700000020	1

BID RECEIVING LOCATION

BID CLERK
DEPARTMENT OF ADMINISTRATION
PURCHASING DIVISION
2019 WASHINGTON ST E
CHARLESTON WV 25305
US

VENDOR

Vendor Customer Code: 000000206945

Vendor Name : McClanahan Construction Company, LLC

Address : 744 Poca River Rd, Poca, WV 25159

Street : 744 Poca River Rd

City : Poca

State : WV **Country :** United States **Zip :** 25159

Principal Contact : Bruce D. McClanahan

Vendor Contact Phone: 304-776-3355 **Extension:**

FOR INFORMATION CONTACT THE BUYER
David H Pauline
304-558-0067
david.h.pauline@wv.gov

Vendor Signature X Bruce D. McClanahan **FEIN#** 55-0698258 **DATE** September 10, 2026

All offers subject to all terms and conditions contained in this solicitation

ADDITIONAL INFORMATION

Construction
(Williamstown Drainage Repairs)

The West Virginia Purchasing Division, for the agency, the West Virginia Army National Guard, Construction and Facilities Management Office, is soliciting bids from qualified contractors for Williamstown Drainage Repairs, at the Army Aviation Support Facility #1, near Williamstown WV, per the attached documentation.

XXXXXXXXXXXXXXXXXXXXXXXXXXXXXXXXXXXXXXXXXXXXXXXXXXXX

Mandatory Pre-bid Meeting
Williamstown AASF#1 (Army Aviation Support Facility)
387 Aviation Drive
Williamstown, WV 26187
August 27, 2026, at 10:00 am EST

See General Construction Specifications for additional information
regarding site visits.

XXXXXXXXXXXXXXXXXXXXXXXXXXXXXXXXXXXXXXXXXXXXXXXXXXXX

INVOICE TO		SHIP TO	
ADJUTANT GENERALS OFFICE		ARMY AVIATION SUPPORT FACILITY 1	
1707 COONSKIN DR		387 AVIATION DR	
CHARLESTON	WV	WILLIAMSTOWN	WV
US		US	

Line	Comm Ln Desc	Qty	Unit Issue	Unit Price	Total Price
1	Williamstown Drainage Repairs (Construction)	1	Base Bid	$375,351.00	$375,351.00

Comm Code	Manufacturer	Specification	Model #
72141205			

Extended Description:
Provide and furnish all labor, materials, tools, expendable equipment and all services to complete Williamstown Drainage Repairs, near Williamstown WV per the attached specifications and documentation.

SCHEDULE OF EVENTS

Line	Event	Event Date
1	Mandatory Pre-bid Meeting At 10:00 am EST.	2026-08-27
2	Vendor Technical Questions Due By 11:00 am EST.	2026-09-03

INSTRUCTIONS TO VENDORS SUBMITTING BIDS

1. **REVIEW DOCUMENTS THOROUGHLY:** The attached documents contain a solicitation for bids. Please read these instructions and all documents attached in their entirety. These instructions provide critical information about requirements that if overlooked could lead to disqualification of a Vendor's bid. All bids must be submitted in accordance with the provisions contained in these instructions and the Solicitation. Failure to do so may result in disqualification of Vendor's bid.

2. **MANDATORY TERMS:** The Solicitation may contain **mandatory** provisions identified by the use of the words "**must**," "**will**," and "**shall**." Failure to comply with a mandatory term in the Solicitation will result in bid disqualification.

3. **PRE-BID MEETING:** The item identified below shall apply to this Solicitation.

☐ A pre-bid meeting will not be held prior to bid opening

☑ A **MANDATORY PRE-BID** meeting will be held at the following place and time:

Williamstown AASF#1 (Army Aviation Support Facility)
387 Aviation Drive, Williamstown, WV 26187
August 27, 2026 at 10:00am
See General Construction Specifications for additional information regarding site visits.

All Vendors submitting a bid must attend the **mandatory** pre-bid meeting. Failure to attend the **mandatory** pre-bid meeting shall result in disqualification of the Vendor's bid. No one individual is permitted to represent more than one vendor at the pre-bid meeting. Any individual that does attempt to represent two or more vendors will be required to select one vendor to which the individual's attendance will be attributed. The vendors not selected will be deemed to have not attended the pre-bid meeting unless another individual attended on their behalf.

An attendance sheet provided at the pre-bid meeting shall serve as the official document verifying attendance. Any person attending the pre-bid meeting on behalf of a Vendor must list on the attendance sheet his or her name and the name of the Vendor he or she is representing. It is the Vendor's responsibility to locate the attendance sheet and provide the required information. Failure to complete the attendance sheet as required may result in disqualification of Vendor's bid.

Vendors who arrive after the starting time but prior to the end of the pre-bid will be permitted to sign in but are charged with knowing all matters discussed at the pre-bid.

Any discussions or answers to questions at the pre-bid meeting are preliminary in nature and are non-binding. Official and binding answers to questions will be published in a written addendum to the Solicitation prior to bid opening.

4. **VENDOR QUESTION DEADLINE:** Vendors may submit questions relating to this Solicitation to the Purchasing Division. Questions must be submitted in writing. All questions **must be submitted on or before the date listed below and to the address listed below to be considered**. A written response will be published in a Solicitation addendum if a response is possible and appropriate. Non-written discussions, conversations, or questions and answers regarding this Solicitation are preliminary in nature and are non-binding.

Submitted emails should have the solicitation number in the subject line. Question

Submission Deadline: September 3, 2026, at 1:30 pm EST.

Submit Questions to: David Pauline, Senior Buyer
2019 Washington Street, East Charleston, WV 25305
Fax: (304) 558-3970
Email: David.H.Pauline@wv.gov

5. **VERBAL COMMUNICATION:** Any verbal communication between the Vendor and any State personnel is not binding, including verbal communication at the mandatory pre-bid conference. Only information issued in writing and added to the Solicitation by an official written addendum by the Purchasing Division is binding.

6. **BID SUBMISSION:** All bids must be submitted on or before the date and time of the bid opening listed in section 7 below. Vendors can submit bids electronically through *wv*OASIS, in paper form delivered to the Purchasing Division at the address listed below either in person or by courier, or in facsimile form by faxing to the Purchasing Division at the number listed below. Notwithstanding the foregoing, the Purchasing Division may prohibit the submission of bids electronically through *wv*OASIS at its sole discretion. Such a prohibition will be contained and communicated in the *wv*OASIS system resulting in the Vendor's inability to submit bids through *wv*OASIS. The Purchasing Division will not accept bids or modification of bids via email.

Bids submitted in paper, facsimile, or via *wv*OASIS must contain a signature. Failure to submit a bid in any form without a signature will result in rejection of your bid.

A bid submitted in paper or facsimile form should contain the information listed below on the face of the submission envelope or fax cover sheet. Otherwise, the bid may be rejected by the Purchasing Division.

VENDOR NAME:
BUYER:
SOLICITATION NO.:
BID OPENING DATE:
BID OPENING TIME:
FAX NUMBER:

Any bid received by the Purchasing Division staff is considered to be in the possession of the Purchasing Division and will not be returned for any reason.

Bid Delivery Address and Fax Number:
Department of Administration, Purchasing Division 2019 Washington Street East
Charleston, WV 25305-0130
Fax: 304-558-3970

7. **BID OPENING:** Bids submitted in response to this Solicitation will be opened at the location identified below on the date and time listed below. Delivery of a bid after the bid opening date and time will result in bid disqualification. For purposes of this Solicitation, a bid is considered delivered when confirmation of delivery is provided by *wv*OASIS (in the case of electronic submission) or when the bid is time stamped by the official Purchasing Division time clock (in the case of hand delivery or via delivery by mail).

Bid Opening Date and Time: September 10, 2026, at 1:30 pm EST.

Bid Opening Location:
Department of Administration, Purchasing Division
2019 Washington Street East
Charleston, WV 25305-0130

8. **ADDENDUM ACKNOWLEDGEMENT:** Changes or revisions to this Solicitation will be made by an official written addendum issued by the Purchasing Division. Vendor should acknowledge receipt of all addenda issued with this Solicitation by completing an Addendum Acknowledgement Form. Failure to acknowledge addenda may result in bid disqualification. The addendum acknowledgement should be submitted with the bid to expedite document processing.

9. **BID FORMATTING:** Vendor should type or electronically enter the information onto its bid to prevent errors in the evaluation. Failure to type or electronically enter the information may result in bid disqualification.

10. **ALTERNATE MODEL OR BRAND:** Unless the box below is checked, any model, brand, or specification listed in this Solicitation establishes the acceptable level of quality only and is not intended to reflect a preference for, or in any way favor, a particular brand or vendor. Vendors may bid alternates to a listed model or brand provided that the alternate is at least equal to the model or brand and complies with the required specifications. The equality of any alternate being bid shall be determined by the State at its sole discretion. Any Vendor bidding an alternate model or brand **shall** clearly identify the alternate items in its bid and should include manufacturer's specifications, industry literature, and/or any other relevant documentation demonstrating the equality of the alternate items. Failure to provide information for alternate items **may** be grounds for rejection of a Vendor's bid.

☐ This Solicitation is based upon a standardized commodity established under W. Va. Code § 5A-3-61. Vendors are expected to bid the standardized commodity identified. Failure to bid the standardized commodity will result in your firm's bid being rejected.

11. **COMMUNICATION LIMITATIONS:** In accordance with West Virginia Code of State Rules §148-1-6.6.2, communication with the State of West Virginia or any of its employees regarding this Solicitation during the solicitation, bid, evaluation or award periods, except through the Purchasing Division, is strictly prohibited without prior Purchasing Division approval. Purchasing Division approval for such communication is implied for all agency delegated and exempt purchases.

12. **REGISTRATION:** Prior to Contract award, the apparent successful Vendor **must** be properly registered with the West Virginia Purchasing Division and must have paid the $125 fee, if applicable.

13. **UNIT PRICE:** Unit prices **shall** prevail in cases of a discrepancy in the Vendor's bid.

14. **PREFERENCE:** Vendor Preference may be requested in purchases of motor vehicles or construction and maintenance equipment and machinery used in highway and other infrastructure projects. Any request for preference must be submitted in writing with the bid, must specifically identify the preference requested with reference to the applicable subsection of West Virginia Code § 5A-3-37, and must include with the bid any information necessary to evaluate and confirm the applicability of the requested preference. A request form to help facilitate the request can be found at: www.state.wv.us/admin/purchase/vrc/Venpref.pdf.

15A. **RECIPROCAL PREFERENCE:** The State of West Virginia applies a reciprocal preference to all solicitations for commodities and printing in accordance with W. Va. Code § 5A-3-37(b). In effect, non-resident vendors receiving a preference in their home states, will see that same preference granted to West Virginia resident vendors bidding against them in West Virginia. Any request for reciprocal preference must include with the bid any information necessary to evaluate and confirm the applicability of the preference. A request form to help facilitate the request can be found at: www.state.wv.us/admin/purchase/vrc/Venpref.pdf.

15. **SMALL, WOMEN-OWNED, OR MINORITY-OWNED BUSINESSES:**
For any solicitations publicly advertised for bid, in accordance with West Virginia Code §5A-3-37 and W. Va. CSR § 148-22-9, any non-resident vendor certified as a small, women-owned, or minority-owned business under W. Va. CSR § 148-22-9 shall be provided the same preference made available to any resident vendor. Any non-resident small, women-owned, or minority- owned business must identify itself as such in writing, must submit that writing to the Purchasing Division with its bid, and must be properly certified under W. Va. CSR § 148-22-9 prior to contract award to receive the preferences made available to resident vendors.

16. **WAIVER OF MINOR IRREGULARITIES:** The Director reserves the right to waive minor irregularities in bids or specifications in accordance with West Virginia Code of State Rules § 148-1-4.7.

17. **ELECTRONIC FILE ACCESS RESTRICTIONS:** Vendor must ensure that its submission in *wv*OASIS can be accessed and viewed by the Purchasing Division staff immediately upon bid opening. The Purchasing Division will consider any file that cannot be immediately accessed and viewed at the time of the bid opening (such as, encrypted files, password protected files, or incompatible files) to be blank or incomplete as context requires and are therefore unacceptable. A vendor will not be permitted to unencrypt files, remove password protections, or resubmit documents after bid opening to make a file viewable if those documents are required with the bid. A Vendor may be required to provide document passwords or remove access restrictions to allow the Purchasing Division to print or electronically save documents provided that those documents are viewable by the Purchasing Division prior to obtaining the password or removing the access restriction.

18. **NON-RESPONSIBLE:** The Purchasing Division Director reserves the right to reject the bid of any vendor as Non-Responsible in accordance with W. Va. Code of State Rules § 148-1- 5.3, when the Director determines that the vendor submitting the bid does not have the capability to fully perform or lacks the integrity and reliability to assure good-faith performance."

19. **ACCEPTANCE/REJECTION:** The State may accept or reject any bid in whole, or in part in accordance with W. Va. Code of State Rules § 148-1-4.6. and § 148-1-6.3."

20. **WITH THE BID REQUIREMENTS:** In instances where these specifications require documentation or other information with the bid, and a vendor fails to provide it with the bid, the Director of the Purchasing Division reserves the right to request those items after bid opening and prior to contract award pursuant to the authority to waive minor irregularities in bids or specifications under W. Va. CSR § 148-1-4.7. This authority does not apply to instances where state law mandates receipt with the bid.

21. **EMAIL NOTIFICATION OF AWARD:** The Purchasing Division will attempt to provide bidders with e-mail notification of contract award when a solicitation that the bidder participated in has been awarded. For notification purposes, bidders must provide the Purchasing Division with a valid email address in the bid response. Bidders may also monitor *wv*OASIS or the Purchasing Division's website to determine when a contract has been awarded.

22. **EXCEPTIONS AND CLARIFICATIONS:** The Solicitation contains the specifications that **shall** form the basis of a contractual agreement. **Vendor shall clearly mark any exceptions, clarifications, or other proposed modifications in its bid.** Exceptions to, clarifications of, or modifications of a requirement or term and condition of the Solicitation may result in bid disqualification.

GENERAL TERMS AND CONDITIONS:

1. CONTRACTUAL AGREEMENT: Issuance of an Award Document signed by the Purchasing Division Director, or his designee, and approved as to form by the Attorney General's office constitutes acceptance by the State of this Contract made by and between the State of West Virginia and the Vendor. Vendor's signature on its bid, or on the Contract if the Contract is not the result of a bid solicitation, signifies Vendor's agreement to be bound by and accept the terms and conditions contained in this Contract.

2. DEFINITIONS: As used in this Solicitation/Contract, the following terms shall have the meanings attributed to them below. Additional definitions may be found in the specifications included with this Solicitation/Contract.

2.1. "Agency" or **"Agencies"** means the agency, board, commission, or other entity of the State of West Virginia that is identified on the first page of the Solicitation or any other public entity seeking to procure goods or services under this Contract.

2.2. "Bid" or **"Proposal"** means the vendors submitted response to this solicitation.

2.3. "Contract" means the binding agreement that is entered into between the State and the Vendor to provide the goods or services requested in the Solicitation.

2.4. "Director" means the Director of the West Virginia Department of Administration, Purchasing Division.

2.5. "Purchasing Division" means the West Virginia Department of Administration, Purchasing Division.

2.6. "Award Document" means the document signed by the Agency and the Purchasing Division, and approved as to form by the Attorney General, that identifies the Vendor as the contract holder.

2.7. "Solicitation" means the official notice of an opportunity to supply the State with goods or services that is published by the Purchasing Division.

2.8. "State" means the State of West Virginia and/or any of its agencies, commissions, boards, etc. as context requires.

2.9. "Vendor" or **"Vendors"** means any entity submitting a bid in response to the Solicitation, the entity that has been selected as the lowest responsible bidder, or the entity that has been awarded the Contract as context requires.

3. CONTRACT TERM; RENEWAL; EXTENSION: The term of this Contract shall be determined in accordance with the category that has been identified as applicable to this Contract below:

☐ **Term Contract**

Initial Contract Term: The Initial Contract Term will be for a period of _____ _____. The Initial Contract Term becomes effective on the effective start date listed on the first page of this Contract, identified as the State of West Virginia contract cover page containing the signatures of the Purchasing Division, Attorney General, and Encumbrance clerk (or another page identified as _____), and the Initial Contract Term ends on the effective end date also shown on the first page of this Contract.

Renewal Term: This Contract may be renewed upon the mutual written consent of the Agency, and the Vendor, with approval of the Purchasing Division and the Attorney General's office (Attorney General approval is as to form only). Any request for renewal should be delivered to the Agency and then submitted to the Purchasing Division thirty (30) days prior to the expiration date of the initial contract term or appropriate renewal term. A Contract renewal shall be in accordance with the terms and conditions of the original contract. Unless otherwise specified below, renewal of this Contract is limited to _____ successive one (1) year periods or multiple renewal periods of less than one year, provided that the multiple renewal periods do not exceed the total number of months available in all renewal years combined. Automatic renewal of this Contract is prohibited. Renewals must be approved by the Vendor, Agency, Purchasing Division and Attorney General's office (Attorney General approval is as to form only)

> ☐ **Alternate Renewal Term** – This contract may be renewed for _____ successive _____ year periods or shorter periods provided that they do not exceed the total number of months contained in all available renewals. Automatic renewal of this Contract is prohibited. Renewals must be approved by the Vendor, Agency, Purchasing Division and Attorney General's office (Attorney General approval is as to form only)

Delivery Order Limitations: In the event that this contract permits delivery orders, a delivery order may only be issued during the time this Contract is in effect. Any delivery order issued within one year of the expiration of this Contract shall be effective for one year from the date the delivery order is issued. No delivery order may be extended beyond one year after this Contract has expired.

☑ **Fixed Period Contract:** This Contract becomes effective upon Vendor's receipt of the notice to proceed and must be completed within One hundred eighty (180) calendar days.

☐ **Fixed Period Contract with Renewals:** This Contract becomes effective upon Vendor's receipt of the notice to proceed and part of the Contract more fully described in the attached specifications must be completed within _____ days. Upon completion of the work covered by the preceding sentence, the vendor agrees that:

☐ the contract will continue for _____ years;

☐ the contract may be renewed for _____ successive _____ year periods or shorter periods provided that they do not exceed the total number of months contained in all available renewals. Automatic renewal of this Contract is prohibited. Renewals must be approved by the Vendor, Agency, Purchasing Division and Attorney General's Office (Attorney General approval is as to form only).

☐ **One-Time Purchase:** The term of this Contract shall run from the issuance of the Award Document until all of the goods contracted for have been delivered, but in no event will this Contract extend for more than one fiscal year.

☐ **Construction/Project Oversight:** This Contract becomes effective on the effective start date listed on the first page of this Contract, identified as the State of West Virginia contract cover page containing the signatures of the Purchasing Division, Attorney General, and Encumbrance clerk (or another page identified as _____), and continues until the project for which the vendor is providing oversight is complete.

☐ **Other:** Contract Term specified in _____

4. AUTHORITY TO PROCEED: Vendor is authorized to begin performance of this contract on the date of encumbrance listed on the front page of the Award Document unless either the box for "Fixed Period Contract" or "Fixed Period Contract with Renewals" has been checked in Section 3 above. If either "Fixed Period Contract" or "Fixed Period Contract with Renewals" has been checked, Vendor must not begin work until it receives a separate notice to proceed from the State. The notice to proceed will then be incorporated into the Contract via change order to memorialize the official date that work commenced.

5. QUANTITIES: The quantities required under this Contract shall be determined in accordance with the category that has been identified as applicable to this Contract below.

☐ **Open End Contract:** Quantities listed in this Solicitation/Award Document are approximations only, based on estimates supplied by the Agency. It is understood and agreed that the Contract shall cover the quantities actually ordered for delivery during the term of the Contract, whether more or less than the quantities shown.

☐ **Service:** The scope of the service to be provided will be more clearly defined in the specifications included herewith.

☑ **Combined Service and Goods:** The scope of the service and deliverable goods to be provided will be more clearly defined in the specifications included herewith.

☐ **One-Time Purchase:** This Contract is for the purchase of a set quantity of goods that are identified in the specifications included herewith. Once those items have been delivered, no additional goods may be procured under this Contract without an appropriate change order approved by the Vendor, Agency, Purchasing Division, and Attorney General's office.

☑ **Construction:** This Contract is for construction activity more fully defined in the specifications.

6. EMERGENCY PURCHASES: The Purchasing Division Director may authorize the Agency to purchase goods or services in the open market that Vendor would otherwise provide under this Contract if those goods or services are for immediate or expedited delivery in an emergency. Emergencies shall include, but are not limited to, delays in transportation or an unanticipated increase in the volume of work. An emergency purchase in the open market, approved by the Purchasing Division Director, shall not constitute of breach of this Contract and shall not entitle the Vendor to any form of compensation or damages. This provision does not excuse the State from fulfilling its obligations under a One-Time Purchase contract.

7. REQUIRED DOCUMENTS: All of the items checked in this section must be provided to the Purchasing Division by the Vendor as specified:

☑ **LICENSE(S) / CERTIFICATIONS / PERMITS:** In addition to anything required under the Section of the General Terms and Conditions entitled Licensing, the apparent successful Vendor shall furnish proof of the following licenses, certifications, and/or permits upon request and in a form acceptable to the State. The request may be prior to or after contract award at the State's sole discretion.

☑ West Virginia Contractor's License

☐

☐

☐

The apparent successful Vendor shall also furnish proof of any additional licenses or certifications contained in the specifications regardless of whether or not that requirement is listed above.

8. INSURANCE: The apparent successful Vendor shall furnish proof of the insurance identified by a checkmark below prior to Contract award. The insurance coverages identified below must be maintained throughout the life of this contract. Thirty (30) days prior to the expiration of the insurance policies, Vendor shall provide the Agency with proof that the insurance mandated herein has been continued. Vendor must also provide Agency with immediate notice of any changes in its insurance policies, including but not limited to, policy cancelation, policy reduction, or change in insurers. The apparent successful Vendor shall also furnish proof of any additional insurance requirements contained in the specifications prior to Contract award regardless of whether that insurance requirement is listed in this section.

Vendor must maintain:

☑ **Commercial General Liability Insurance** in at least an amount of: $1,000,000.00 per occurrence.

☑ **Automobile Liability Insurance** in at least an amount of: $1,000,000.00 per occurrence.

☐ **Professional/Malpractice/Errors and Omission Insurance** in at least an amount of: _____per occurrence. Notwithstanding the forgoing, Vendor's are not required to list the State as an additional insured for this type of policy.

☐ **Commercial Crime and Third Party Fidelity Insurance** in an amount of: _____ per occurrence.

☐ **Cyber Liability Insurance** in an amount of: _____ per occurrence.

☐ **Builders Risk Insurance** in an amount equal to 100% of the amount of the Contract.

☐ **Pollution Insurance** in an amount of: _____ per occurrence.

☐ **Aircraft Liability** in an amount of: _____ per occurrence.

☐

☐

☐

☐

9. WORKERS' COMPENSATION INSURANCE: Vendor shall comply with laws relating to workers compensation, shall maintain workers' compensation insurance when required, and shall furnish proof of workers' compensation insurance upon request.

10. VENUE: All legal actions for damages brought by Vendor against the State shall be brought in the West Virginia Claims Commission. Other causes of action must be brought in the West Virginia court authorized by statute to exercise jurisdiction over it.

11. LIQUIDATED DAMAGES: This clause shall in no way be considered exclusive and shall not limit the State or Agency's right to pursue any other available remedy. Vendor shall pay liquidated damages in the amount specified below or as described in the specifications:

☐ _____ for _____.

☑ Liquidated Damages Contained in the Specifications.

☐ Liquidated Damages Are Not Included in this Contract.

12. ACCEPTANCE: Vendor's signature on its bid, or on the certification and signature page, constitutes an offer to the State that cannot be unilaterally withdrawn, signifies that the product or service proposed by vendor meets the mandatory requirements contained in the Solicitation for that product or service, unless otherwise indicated, and signifies acceptance of the terms and conditions contained in the Solicitation unless otherwise indicated.

13. PRICING: The pricing set forth herein is firm for the life of the Contract, unless specified elsewhere within this Solicitation/Contract by the State. A Vendor's inclusion of price adjustment provisions in its bid, without an express authorization from the State in the Solicitation to do so, may result in bid disqualification. Notwithstanding the foregoing, Vendor must extend any publicly advertised sale price to the State and invoice at the lower of the contract price or the publicly advertised sale price.

14. PAYMENT IN ARREARS: Payments for goods/services will be made in arrears only upon receipt of a proper invoice, detailing the goods/services provided or receipt of the goods/services, whichever is later. Notwithstanding the foregoing, payments for software maintenance, licenses, or subscriptions may be paid annually in advance.

15. PAYMENT METHODS: Vendor must accept payment by electronic funds transfer and P-Card. (The State of West Virginia's Purchasing Card program, administered under contract by a banking institution, processes payment for goods and services through state designated credit cards.)

16. TAXES: The Vendor shall pay any applicable sales, use, personal property or any other taxes arising out of this Contract and the transactions contemplated thereby. The State of West Virginia is exempt from federal and state taxes and will not pay or reimburse such taxes.

17. ADDITIONAL FEES: Vendor is not permitted to charge additional fees or assess additional charges that were not either expressly provided for in the solicitation published by the State of West Virginia, included in the Contract, or included in the unit price or lump sum bid amount that Vendor is required by the solicitation to provide. Including such fees or charges as notes to the solicitation may result in rejection of vendor's bid. Requesting such fees or charges be paid after the contract has been awarded may result in cancellation of the contract.

18. FUNDING: This Contract shall continue for the term stated herein, contingent upon funds being appropriated by the Legislature or otherwise being made available. In the event funds are not appropriated or otherwise made available, this Contract becomes void and of no effect beginning on July 1 of the fiscal year for which funding has not been appropriated or otherwise made available. If that occurs, the State may notify the Vendor that an alternative source of funding has been obtained and thereby avoid the automatic termination. Non-appropriation or non-funding shall not be considered an event of default.

19. CANCELLATION: The Purchasing Division Director reserves the right to cancel this Contract immediately upon written notice to the vendor if the materials or workmanship supplied do not conform to the specifications contained in the Contract. The Purchasing Division Director may also cancel any purchase or Contract upon 30 days written notice to the Vendor in accordance with West Virginia Code of State Rules § 148-1-5.2.b.

20. TIME: Time is of the essence regarding all matters of time and performance in this Contract.

21. APPLICABLE LAW: This Contract is governed by and interpreted under West Virginia law without giving effect to its choice of law principles. Any information provided in specification manuals, or any other source, verbal or written, which contradicts or violates the West Virginia Constitution, West Virginia Code, or West Virginia Code of State Rules is void and of no effect.

22. COMPLIANCE WITH LAWS: Vendor shall comply with all applicable federal, state, and local laws, regulations and ordinances. By submitting a bid, Vendor acknowledges that it has reviewed, understands, and will comply with all applicable laws, regulations, and ordinances.

> **SUBCONTRACTOR COMPLIANCE:** Vendor shall notify all subcontractors providing commodities or services related to this Contract that as subcontractors, they too are required to comply with all applicable laws, regulations, and ordinances. Notification under this provision must occur prior to the performance of any work under the contract by the subcontractor.

23. ARBITRATION: Any references made to arbitration contained in this Contract, Vendor's bid, or in any American Institute of Architects documents pertaining to this Contract are hereby deleted, void, and of no effect.

24. MODIFICATIONS: This writing is the parties' final expression of intent. Notwithstanding anything contained in this Contract to the contrary no modification of this Contract shall be binding without mutual written consent of the Agency, and the Vendor, with approval of the Purchasing Division and the Attorney General's office (Attorney General approval is as to form only). Any change to existing contracts that adds work or changes contract cost, and were not included in the original contract, must be approved by the Purchasing Division and the Attorney General's Office (as to form) prior to the implementation of the change or commencement of work affected by the change.

25. WAIVER: The failure of either party to insist upon a strict performance of any of the terms or provision of this Contract, or to exercise any option, right, or remedy herein contained, shall not be construed as a waiver or a relinquishment for the future of such term, provision, option, right, or remedy, but the same shall continue in full force and effect. Any waiver must be expressly stated in writing and signed by the waiving party.

26. SUBSEQUENT FORMS: The terms and conditions contained in this Contract shall supersede any and all subsequent terms and conditions which may appear on any form documents submitted by Vendor to the Agency or Purchasing Division such as price lists, order forms, invoices, sales agreements, or maintenance agreements, and includes internet websites or other electronic documents. Acceptance or use of Vendor's forms does not constitute acceptance of the terms and conditions contained thereon.

27. ASSIGNMENT: Neither this Contract nor any monies due, or to become due hereunder, may be assigned by the Vendor without the express written consent of the Agency, the Purchasing Division, the Attorney General's office (as to form only), and any other government agency or office that may be required to approve such assignments.

28. WARRANTY: The Vendor expressly warrants that the goods and/or services covered by this Contract will: (a) conform to the specifications, drawings, samples, or other description furnished or specified by the Agency; (b) be merchantable and fit for the purpose intended; and (c) be free from defect in material and workmanship.

29. STATE EMPLOYEES: State employees are not permitted to utilize this Contract for personal use and the Vendor is prohibited from permitting or facilitating the same.

30. PRIVACY, SECURITY, AND CONFIDENTIALITY: The Vendor agrees that it will not disclose to anyone, directly or indirectly, any such personally identifiable information or other confidential information gained from the Agency, unless the individual who is the subject of the information consents to the disclosure in writing or the disclosure is made pursuant to the Agency's policies, procedures, and rules. Vendor further agrees to comply with the Confidentiality Policies and Information Security Accountability Requirements, set forth in www.state.wv.us/admin/purchase/privacy.

31. YOUR SUBMISSION IS A PUBLIC DOCUMENT: Vendor's entire response to the Solicitation and the resulting Contract are public documents. As public documents, they will be disclosed to the public following the bid/proposal opening or award of the contract, as required by the competitive bidding laws of West Virginia Code §§ 5A-3-1 et seq., 5-22-1 et seq., and 5G-1-1 et seq. and the Freedom of Information Act West Virginia Code §§ 29B-1-1 et seq.

DO NOT SUBMIT MATERIAL YOU CONSIDER TO BE CONFIDENTIAL, A TRADE SECRET, OR OTHERWISE NOT SUBJECT TO PUBLIC DISCLOSURE.

Submission of any bid, proposal, or other document to the Purchasing Division constitutes your explicit consent to the subsequent public disclosure of the bid, proposal, or document. The Purchasing Division will disclose any document labeled "confidential," "proprietary," "trade secret," "private," or labeled with any other claim against public disclosure of the documents, to include any "trade secrets" as defined by West Virginia Code § 47-22-1 et seq. All submissions are subject to public disclosure without notice.

32. LICENSING: In accordance with West Virginia Code of State Rules § 148-1-6.1.e, Vendor must be licensed and in good standing in accordance with any and all state and local laws and requirements by any state or local agency of West Virginia, including, but not limited to, the West Virginia Secretary of State's Office, the West Virginia Tax Department, West Virginia Insurance Commission, or any other state agency or political subdivision. Obligations related to political subdivisions may include, but are not limited to, business licensing, business and occupation taxes, inspection compliance, permitting, etc. Upon request, the Vendor must provide all necessary releases to obtain information to enable the Purchasing Division Director or the Agency to verify that the Vendor is licensed and in good standing with the above entities.

> **SUBCONTRACTOR COMPLIANCE:** Vendor shall notify all subcontractors providing commodities or services related to this Contract that as subcontractors, they too are required to be licensed, in good standing, and up-to-date on all state and local obligations as described in this section. Obligations related to political subdivisions may include, but are not limited to, business licensing, business and occupation taxes, inspection compliance, permitting, etc. Notification under this provision must occur prior to the performance of any work under the contract by the subcontractor.

33. ANTITRUST: In submitting a bid to, signing a contract with, or accepting a Award Document from any agency of the State of West Virginia, the Vendor agrees to convey, sell, assign, or transfer to the State of West Virginia all rights, title, and interest in and to all causes of action it may now or hereafter acquire under the antitrust laws of the United States and the State of West Virginia for price fixing and/or unreasonable restraints of trade relating to the particular commodities or services purchased or acquired by the State of West Virginia. Such assignment shall be made and become effective at the time the purchasing agency tenders the initial payment to Vendor.

34. VENDOR NON-CONFLICT: Neither Vendor nor its representatives are permitted to have any interest, nor shall they acquire any interest, direct or indirect, which would compromise the performance of its services hereunder. Any such interests shall be promptly presented in detail to the Agency.

35. VENDOR RELATIONSHIP: The relationship of the Vendor to the State shall be that of an independent contractor and no principal-agent relationship or employer-employee relationship is contemplated or created by this Contract. The Vendor as an independent contractor is solely liable for the acts and omissions of its employees and agents. Vendor shall be responsible for selecting, supervising, and compensating any and all individuals employed pursuant to the terms of this Solicitation and resulting contract. Neither the Vendor, nor any employees or subcontractors of the Vendor, shall be deemed to be employees of the State for any purpose whatsoever. Vendor shall be exclusively responsible for payment of employees and contractors for all wages and salaries, taxes, withholding payments, penalties, fees, fringe benefits, professional liability insurance premiums, contributions to insurance and pension, or other deferred compensation plans, including but not limited to, Workers' Compensation and Social Security obligations, licensing fees, etc. and the filing of all necessary documents, forms, and returns pertinent to all of the foregoing.

Vendor shall hold harmless the State, and shall provide the State and Agency with a defense against any and all claims including, but not limited to, the foregoing payments, withholdings, contributions, taxes, Social Security taxes, and employer income tax returns.

36. INDEMNIFICATION: The Vendor agrees to indemnify, defend, and hold harmless the State and the Agency, their officers, and employees from and against: (1) Any claims or losses for services rendered by any subcontractor, person, or firm performing or supplying services, materials, or supplies in connection with the performance of the Contract; (2) Any claims or losses resulting to any person or entity injured or damaged by the Vendor, its officers, employees, or subcontractors by the publication, translation, reproduction, delivery, performance, use, or disposition of any data used under the Contract in a manner not authorized by the Contract, or by Federal or State statutes or regulations; and (3) Any failure of the Vendor, its officers, employees, or subcontractors to observe State and Federal laws including, but not limited to, labor and wage and hour laws.

37. NO DEBT CERTIFICATION: In accordance with West Virginia Code §§ 5A-3-10a and 5-22-1(i), the State is prohibited from awarding a contract to any bidder that owes a debt to the State or a political subdivision of the State. By submitting a bid, or entering into a contract with the State, Vendor is affirming that (1) for construction contracts, the Vendor is not in default on any monetary obligation owed to the state or a political subdivision of the state, and (2) for all other contracts, neither the Vendor nor any related party owe a debt as defined above, and neither the Vendor nor any related party are in employer default as defined in the statute cited above unless the debt or employer default is permitted under the statute.

38. CONFLICT OF INTEREST: Vendor, its officers or members or employees, shall not presently have or acquire an interest, direct or indirect, which would conflict with or compromise the performance of its obligations hereunder. Vendor shall periodically inquire of its officers, members and employees to ensure that a conflict of interest does not arise. Any conflict of interest discovered shall be promptly presented in detail to the Agency.

39. REPORTS: Vendor shall provide the Agency and/or the Purchasing Division with the following reports identified by a checked box below:

☑ Such reports as the Agency and/or the Purchasing Division may request. Requested reports may include, but are not limited to, quantities purchased, agencies utilizing the contract, total contract expenditures by agency, etc.

☐ Quarterly reports detailing the total quantity of purchases in units and dollars, along with a listing of purchases by agency. Quarterly reports should be delivered to the Purchasing Division via email at purchasing.division@wv.gov.

40. BACKGROUND CHECK: In accordance with W. Va. Code § 15-2D-3, the State reserves the right to prohibit a service provider's employees from accessing sensitive or critical information or to be present at the Capitol complex based upon results addressed from a criminal background check. Service providers should contact the West Virginia Division of Protective Services by phone at (304) 558-9911 for more information.

41. PREFERENCE FOR USE OF DOMESTIC STEEL PRODUCTS: Except when authorized by the Director of the Purchasing Division pursuant to W. Va. Code § 5A-3-56, no contractor may use or supply steel products for a State Contract Project other than those steel products made in the United States. A contractor who uses steel products in violation of this section may be subject to civil penalties pursuant to W. Va. Code § 5A-3-56. As used in this section:

a. "State Contract Project" means any erection or construction of, or any addition to, alteration of or other improvement to any building or structure, including, but not limited to, roads or highways, or the installation of any heating or cooling or ventilating plants or other equipment, or the supply of and materials for such projects, pursuant to a contract with the State of West Virginia for which bids were solicited on or after June 6, 2001.

b. "Steel Products" means products rolled, formed, shaped, drawn, extruded, forged, cast, fabricated or otherwise similarly processed, or processed by a combination of two or more or such operations, from steel made by the open heath, basic oxygen, electric furnace, Bessemer or other steel making process.

c. The Purchasing Division Director may, in writing, authorize the use of foreign steel products if:

    1. The cost for each contract item used does not exceed one tenth of one percent (.1%) of the total contract cost or two thousand five hundred dollars ($2,500.00), whichever is greater. For the purposes of this section, the cost is the value of the steel product as delivered to the project; or

    2. The Director of the Purchasing Division determines that specified steel materials are not produced in the United States in sufficient quantity or otherwise are not reasonably available to meet contract requirements.

42. PREFERENCE FOR USE OF DOMESTIC ALUMINUM, GLASS, AND STEEL: In Accordance with W. Va. Code § 5-19-1 et seq., and W. Va. CSR § 148-10-1 et seq., for every contract or subcontract, subject to the limitations contained herein, for the construction, reconstruction, alteration, repair, improvement or maintenance of public works or for the purchase of any item of machinery or equipment to be used at sites of public works, only domestic aluminum, glass or steel products shall be supplied unless the spending officer determines, in writing, after the receipt of offers or bids, (1) that the cost of domestic aluminum, glass or steel products is unreasonable or inconsistent with the public interest of the State of West Virginia, (2) that domestic aluminum, glass or steel products are not produced in sufficient quantities to meet the contract requirements, or (3) the available domestic aluminum, glass, or steel do not meet the contract specifications. This provision only applies to public works contracts awarded in an amount more than fifty thousand dollars ($50,000) or public works contracts that require more than ten thousand pounds of steel products.

The cost of domestic aluminum, glass, or steel products may be unreasonable if the cost is more than twenty percent (20%) of the bid or offered price for foreign made aluminum, glass, or steel products. If the domestic aluminum, glass or steel products to be supplied or produced in a "substantial labor surplus area", as defined by the United States Department of Labor, the cost of domestic aluminum, glass, or steel products may be unreasonable if the cost is more than thirty percent (30%) of the bid or offered price for foreign made aluminum, glass, or steel products. This preference shall be applied to an item of machinery or equipment, as indicated above, when the item is a single unit of equipment or machinery manufactured primarily of aluminum, glass or steel, is part of a public works contract and has the sole purpose or of being a permanent part of a single public works project. This provision does not apply to equipment or machinery purchased by a spending unit for use by that spending unit and not as part of a single public works project.

All bids and offers including domestic aluminum, glass or steel products that exceed bid or offer prices including foreign aluminum, glass or steel products after application of the preferences provided in this provision may be reduced to a price equal to or lower than the lowest bid or offer price for foreign aluminum, glass or steel products plus the applicable preference. If the reduced bid or offer prices are made in writing and supersede the prior bid or offer prices, all bids or offers, including the reduced bid or offer prices, will be reevaluated in accordance with this rule.

43. INTERESTED PARTY SUPPLEMENTAL DISCLOSURE: W. Va. Code § 6D-1-2 requires that for contracts with an actual or estimated value of at least $1 million, the Vendor must submit to the Agency a disclosure of interested parties prior to beginning work under this Contract. Additionally, the Vendor must submit a supplemental disclosure of interested parties reflecting any new or differing interested parties to the contract, which were not included in the original pre-work interested party disclosure, within 30 days following the completion or termination of the contract. A copy of that form is included with this solicitation or can be obtained from the WV Ethics Commission. This requirement does not apply to publicly traded companies listed on a national or international stock exchange. A more detailed definition of interested parties can be obtained from the form referenced above.

44. PROHIBITION AGAINST USED OR REFURBISHED: Unless expressly permitted in the solicitation published by the State, Vendor must provide new, unused commodities, and is prohibited from supplying used or refurbished commodities, in fulfilling its responsibilities under this Contract.

45. VOID CONTRACT CLAUSES: This Contract is subject to the provisions of West Virginia Code § 5A-3-62, which automatically voids certain contract clauses that violate State law.

46. ISRAEL BOYCOTT: Bidder understands and agrees that, pursuant to W. Va. Code § 5A-3-63, it is prohibited from engaging in a boycott of Israel during the term of this contract.

ADDITIONAL TERMS AND CONDITIONS (Construction Contracts Only)

1. CONTRACTOR'S LICENSE: Until June 15, 2021, West Virginia Code § 21-11-2, and after that date, § 30-42-2, requires that all persons desiring to perform contracting work in this state be licensed. The West Virginia Contractors Licensing Board is empowered to issue the contractor's license. Applications for a contractor's license may be made by contacting the West Virginia Contractor Licensing Board.

The apparent successful Vendor must furnish a copy of its contractor's license prior to the issuance of a contract award document.

2. BONDS: The following bonds must be submitted:

☑ **BID BOND:** Pursuant to the requirements contained in W. Va. Code § 5-22-1(c), All Vendors submitting a bid on a construction project shall furnish a valid bid bond in the amount of five percent (5%) of the total amount of the bid protecting the State of West Virginia. **THE BID BOND MUST BE SUBMITTED WITH THE BID OR VENDOR'S BID WILL BE DISQUALIFIED.**

☑ **PERFORMANCE BOND:** The apparent successful Vendor shall provide a performance bond in the amount of 100% of the contract. The performance bond must be received by the Purchasing Division prior to Contract award. (Attorney General requires use of the State approved bond forms found at: www.state.wv.us/admin/purchase/forms2.html)

☑ **LABOR/MATERIAL PAYMENT BOND**: The apparent successful Vendor shall provide a labor/material payment bond in the amount of 100% of the Contract value. The labor/material payment bond must be delivered to the Purchasing Division prior to Contract award. (Attorney General requires use of the State approved bond forms found at: www.state.wv.us/admin/purchase/forms2.html)

☐ **MAINTENANCE BOND:** The apparent successful Vendor shall provide a two (2) year maintenance bond covering the roofing system if the work impacts an existing roof. The amount of the bond must be equal to the price associated with the percentage of the project impacting the roof. The maintenance bond must be issued and delivered to the Purchasing Division prior to Contract award. (Attorney General requires use of the State approved bond forms found at: www.state.wv.us/admin/purchase/forms2.html)

At a minimum, all construction projects require a bid bond, performance bond, and labor/material payment bond. Failure on the part of the state of West Virginia to checkmark the required bonds above does not relieve the vendor from the legal requirement of providing these bonds.

In lieu of the Bid Bond, the Vendor may provide certified checks, cashier's checks, or irrevocable letters of credit. Any certified check, cashier's check, or irrevocable letter of credit provided in lieu of the bid bond must be of the same amount required of the Bid Bond and delivered with the bid.

3. DRUG-FREE WORKPLACE AFFIDAVIT: W. Va. Code § 21-1D-5 provides that any solicitation for a public improvement contract requires each Vendor that submits a bid for the work to submit an affidavit that the Vendor has a written plan for a drug-free workplace policy. If the affidavit is not submitted with the bid submission, the Purchasing Division shall promptly request by telephone and electronic mail that the low bidder and second low bidder provide the affidavit within one business day of the request. Failure to submit the affidavit within one business day of receiving the request shall result in disqualification of the bid. To comply with this law, Vendor should complete the enclosed drug-free workplace affidavit and submit the same with its bid. Failure to submit the signed and notarized drugfree workplace affidavit or a similar affidavit that fully complies with the requirements of the applicable code, within one business day of being requested to do so shall result in disqualification of Vendor's bid. Pursuant to W. Va. Code 21-1D-2(b) and (k), this provision does not apply to public improvement contracts the value of which is $100,000 or less or temporary or emergency repairs.

3.1. DRUG-FREE WORKPLACE POLICY: Pursuant to W. Va. Code § 21-1D-4, Vendor and its subcontractors must implement and maintain a written drug-free workplace policy that complies with said article. The awarding public authority shall cancel this contract if: (1) Vendor fails to implement and maintain a written drug-free workplace policy described in the preceding paragraph, (2) Vendor fails to provide information regarding implementation of its drug-free workplace policy at the request of the public authority; or (3) Vendor provides to the public authority false information regarding the contractor's drug-free workplace policy.

Pursuant to W. Va. Code 21-1D-2(b) and (k), this provision does not apply to public improvement contracts the value of which is $100,000 or less or temporary or emergency repairs.

4. DRUG FREE WORKPLACE REPORT: Pursuant to W. Va. Code § 21-1D-7b, no less than once per year, or upon completion of the project, every contractor shall provide a certified report to the public authority which let the contract. For contracts over $25,000, the public authority shall be the West Virginia Purchasing Division. For contracts of $25,000 or less, the public authority shall be the agency issuing the contract. The report shall include:

(1) Information to show that the education and training service to the requirements of West Virginia Code § 21-1D-5 was provided;

(2) The name of the laboratory certified by the United States Department of Health and Human Services or its successor that performs the drug tests;

(3) The average number of employees in connection with the construction on the public improvement;

(4) Drug test results for the following categories including the number of positive tests and the number of negative tests: (A) Pre-employment and new hires; (B) Reasonable suspicion; (C) Post-accident; and (D) Random.

Vendor should utilize the attached Certified Drug Free Workplace Report Coversheet when submitting the report required hereunder. Pursuant to W. Va. Code 21-1D-2(b) and (k), this provision does not apply to public improvement contracts the value of which is $100,000 or less or temporary or emergency repairs.

5. AIA DOCUMENTS: All construction contracts that will be completed in conjunction with architectural services procured under Chapter 5G of the West Virginia Code will be governed by the attached AIA documents, as amended by the Supplementary Conditions for the State of West Virginia, in addition to the terms and conditions contained herein.

6. PROHIBITION AGAINST GENERAL CONDITIONS: Notwithstanding anything contained in the AIA Documents or the Supplementary Conditions, the State of West Virginia will not pay for general conditions, or winter conditions, or any other condition representing a delay in the contracts. The Vendor is expected to mitigate delay costs to the greatest extent possible and any costs associated with Delays must be specifically and concretely identified. The state will not consider an average daily rate multiplied by the number of days extended to be an acceptable charge.

7. GREEN BUILDINGS MINIMUM ENERGY STANDARDS: In accordance with § 22-29-4, all new building construction projects of public agencies that have not entered the schematic design phase prior to July 1, 2012, or any building construction project receiving state grant funds and appropriations, including public schools, that have not entered the schematic design phase prior to July 1, 2012, shall be designed and constructed complying with the ICC International Energy Conservation Code, adopted by the State Fire Commission, and the ANSI/ASHRAE/IESNA Standard 90.1-2007: Provided, That if any construction project has a commitment of federal funds to pay for a portion of such project, this provision shall only apply to the extent such standards are consistent with the federal standards.

8. LOCAL LABOR MARKET HIRING REQUIREMENT: Pursuant to West Virginia Code §21-1C-1 et seq., Employers shall hire at least seventy-five percent of employees for public improvement construction projects from the local labor market, to be rounded off, with at least two employees from outside the local labor market permissible for each employer per project.

Any employer unable to employ the minimum number of employees from the local labor market shall inform the nearest office of Workforce West Virginia of the number of qualified employees needed and provide a job description of the positions to be filled.

If, within three business days following the placing of a job order, Workforce West Virginia is unable to refer any qualified job applicants to the employer or refers less qualified job applicants than the number requested, then Workforce West Virginia shall issue a waiver to the employer stating the unavailability of applicant and shall permit the employer to fill any positions covered by the waiver from outside the local labor market. The waiver shall be in writing and shall be issued within the prescribed three days. A waiver certificate shall be sent to both the employer for its permanent project records and to the public authority.

Any employer who violates this requirement is subject to a civil penalty of $250 per each employee less than the required threshold of seventy-five percent per day of violation after receipt of a notice of violation.

Any employer that continues to violate any provision of this article more than fourteen calendar days after receipt of a notice of violation is subject to a civil penalty of $500 per each employee less than the required threshold of seventy-five percent per day of violation.

The following terms used in this section have the meaning shown below.

(1) The term “construction project” means any construction, reconstruction, improvement, enlargement, painting, decorating or repair of any public improvement let to contract in an amount equal to or greater than $500,000. The term “construction project” does not include temporary or emergency repairs;

(2) The term “employee” means any person hired or permitted to perform hourly work for wages by a person, firm or corporation in the construction industry; The term “employee” does not include:(i) Bona fide employees of a public authority or individuals engaged in making temporary or emergency repairs;(ii) Bona fide independent contractors; or(iii) Salaried supervisory personnel necessary to assure efficient execution of the employee's work;

(3) The term “employer” means any person, firm or corporation employing one or more employees on any public improvement and includes all contractors and subcontractors;

(4) The term “local labor market” means every county in West Virginia and any county outside of West Virginia if any portion of that county is within fifty miles of the border of West Virginia;

(5) The term “public improvement” includes the construction of all buildings, roads, highways, bridges, streets, alleys, sewers, ditches, sewage disposal plants, waterworks, airports and all other structures that may be let to contract by a public authority, excluding improvements funded, in whole or in part, by federal funds.

9. DAVIS-BACON AND RELATED ACT WAGE RATES:

☑ The work performed under this contract is federally funded in whole, or in part. Pursuant to 2 CFR 200.317, Vendors are required to pay applicable Davis-Bacon wage rates.

☐ The work performed under this contract is not subject to Davis-Bacon wage rates.

10. SUBCONTRACTOR LIST SUBMISSION: In accordance with W. Va. Code § 5-22-1, the apparent low bidder on a contract valued at more than $250,000.00 for the construction, alteration, decoration, painting or improvement of a new or existing building or structure shall submit a list of all subcontractors who will perform more than $25,000.00 of work on the project including labor and materials. (This section does not apply to any other construction projects, such as highway, mine reclamation, water or sewer projects.) The subcontractor list shall be provided to the Purchasing Division within one business day of the opening of bids for review.
If the apparent low bidder fails to submit the subcontractor list, the Purchasing Division shall promptly request by telephone and electronic mail that the low bidder and second low bidder provide the subcontractor list within one business day of the request. Failure to submit the subcontractor list within one business day of receiving the request shall result in disqualification of the bid.

If no subcontractors who will perform more than $25,000.00 of work are to be used to complete the project, the apparent low bidder must make this clear on the subcontractor list, in the bid itself, or in response to the Purchasing Division's request for the subcontractor list.

a. Required Information. The subcontractor list must contain the following information:

i. Bidder's name

ii. Name of each subcontractor performing more than $25,000 of work on the project.

iii. The license number of each subcontractor, as required by W. Va. Code § 21-11-1 et. seq.

iv. If applicable, a notation that no subcontractor will be used to perform more than $25,000.00 of work. (This item iv. is not required if the vendor makes this clear in the bid itself or in documentation following the request for the subcontractor list.)

b. Subcontractor List Submission Form: The subcontractor list may be submitted in any form, including the attached form, as long as the required information noted above is included. If any information is missing from the bidder's subcontractor list submission, it may be obtained from other documents such as bids, emails, letters, etc. that accompany the subcontractor list submission.

c. Substitution of Subcontractor. Written approval must be obtained from the State Spending Unit before any subcontractor substitution is permitted. Substitutions are not permitted unless:

i. The subcontractor listed in the original bid has filed for bankruptcy;

ii. The subcontractor in the original bid has been debarred or suspended; or

iii. The contractor certifies in writing that the subcontractor listed in the original bid fails, is unable, or refuses to perform his subcontract.

Subcontractor List Submission (Construction Contracts Only)

Bidder's Name: McClanahan Construction Company, LLC

☒ Check this box if no subcontractors will perform more than $25,000.00 of work to complete the project.

Subcontractor Name	License Number if Required by W. Va. Code § 21-11-1 et. seq.

Attach additional pages if necessary

Revised 8/24/2023

DESIGNATED CONTACT: Vendor appoints the individual identified in this Section as the Contract Administrator and the initial point of contact for matters relating to this Contract.

(Printed Name and Title) Bruce D. McClanahan

(Address) 744 Poca River Rd N., Poca, WV 25159

(Phone Number) / (Fax Number) 304-776-3355

(email address) bruce@mcclanahanconstruction.com

CERTIFICATION AND SIGNATURE: By signing below, or submitting documentation through *wv*OASIS, I certify that: I have reviewed this Solicitation/Contract in its entirety; that I understand the requirements, terms and conditions, and other information contained herein; that this bid, offer or proposal constitutes an offer to the State that cannot be unilaterally withdrawn; that the product or service proposed meets the mandatory requirements contained in the Solicitation/Contract for that product or service, unless otherwise stated herein; that the Vendor accepts the terms and conditions contained in the Solicitation, unless otherwise stated herein; that I am submitting this bid, offer or proposal for review and consideration; that this bid or offer was made without prior understanding, agreement, or connection with any entity submitting a bid or offer for the same material, supplies, equipment or services; that this bid or offer is in all respects fair and without collusion or fraud; that this Contract is accepted or entered into without any prior understanding, agreement, or connection to any other entity that could be considered a violation of law; that I am authorized by the Vendor to execute and submit this bid, offer, or proposal, or any documents related thereto on Vendor's behalf; that I am authorized to bind the vendor in a contractual relationship; and that to the best of my knowledge, the vendor has properly registered with any State agency that may require registration.

By signing below, I further certify that I understand this Contract is subject to the provisions of West Virginia Code § 5A-3-62, which automatically voids certain contract clauses that violate State law; and that pursuant to W. Va. Code 5A-3-63, the entity entering into this contract is prohibited from engaging in a boycott against Israel.

McClanahan Construction Company, LLC
(Company)

Bruce D. McClanahan
(Signature of Authorized Representative)

Bruce D. McClanahan
(Printed Name and Title of Authorized Representative) (Date)

304-776-3355
(Phone Number) (Fax Number)

bruce@mcclanahanconstruction.com
(Email Address)

THRASHER

ARCHITECTURE
ENGINEERING
FIELD SERVICES

PROJECT MANUAL

AND

DETAILED SPECIFICATIONS

FOR THE

WEST VIRGINIA ARMY NATIONAL GUARD
WOOD COUNTY, WEST VIRGINIA

FOR THE

WILLIAMSTOWN DRAINAGE REPAIRS

AUGUST 2026

THRASHER PROJECT # T80-11652

600 White Oaks Blvd | P.O. Box 940 | Bridgeport, WV 26330 | tel: 1-800-273-6541 | www.thethrashergroup.com

WILLAMSTOWN DRAINAGE REPAIRS

FOR THE

WEST VIRGINIA ARMY NATIONAL GUARD

WOOD COUNTY, WEST VIRGINIA

PROFESSIONAL SEALS

WEST VIRGINIA ARMY NATIONAL GUARD
WOOD COUNTY, WEST VIRGINIA
FOR THE
WILLIAMSTOWN DRAINAGE REPAIRS

- I N D E X -

BIDDING DOCUMENTS

Bid Form

CONDITIONS OF WORK

Construction Change Directive	G714
Change Order	G701
Application for Certificate of Payment	G702
Certificate of Substantial Completion	C704
Consent of Surety to Final Payment	G070
Consent of Surety to Reduction in or Partial Release of Retainage	G070A

GENERAL CONDITIONS

General Conditions of the Contract for Construction

State of WV Supplementary Conditions to A201

WAGE RATES

TECHNICAL SPECIFICATIONS

Summary	011000
Unit Prices	012200
Payment Procedures	012900
Project Management and Coordination	013100
Submittal Procedures	013300
Execution	017300
Closeout Procedures	017700

BID FORM FOR CONSTRUCTION CONTRACT

The terms used in this Bid with initial capital letters have the meanings stated in the Instructions to Bidders, the General Conditions, and the Supplementary Conditions.

ARTICLE 1—OWNER AND BIDDER

1.01 This bid is submitted to: State Purchasing

1.02 The undersigned Bidder proposes and agrees, if this Bid is accepted, to enter into an Agreement with Owner in the form included in the Bidding Documents to perform all Work as specified or indicated in the Bidding Documents for the prices and within the times indicated in this Bid and in accordance with the other terms and conditions of the Bidding Documents.

ARTICLE 2—ATTACHMENTS TO THIS BID

2.01 The following documents are submitted with and made a condition of this Bid:

A. Bid Opening Requirements

ARTICLE 3—BASIS OF BID—LUMP SUM BID AND UNIT PRICES

GENERAL

The Bidder shall take notice of and shall be responsible for any local or state taxes levied and applicable, and the cost for the same shall be included as part of the submitted Bid.

The total Bid cost stated includes a complete operating installation including furnishing and installation of any and all changes or additions in plans, piping, mechanical work, additional electrical work, accessories, controls, etc. necessary to accommodate alternative equipment systems or materials used in construction.

BID PROPOSAL

The Bidder agrees to perform all required Work described in the detailed Specifications and as shown on the Plans for the complete construction and placing in satisfactory operation the Williamstown Drainage Repair. The Project "Sequence of Construction" has been detailed in the Drawings and Specification Division 1, Project Summary, Section 011000. The Bidder agrees to perform all the Work proposed for the total of the following Bid prices.

3.01 *Lump Sum Bids*

A. Bidder will complete the Work in accordance with the Contract Documents for the lump sum (stipulated) price(s), together with any Unit Prices indicated in Paragraph 3.02 and shown in the bid schedule.

B. Lump Sum Bids may be one of the following:

1. Lump Sum Price (Base Bid and Alternates)

Copyright© 2018 National Society of Professional Engineers, American Council of Engineering Companies, and American Society of Civil Engineers. All rights reserved.

3.02 *Unit Price Bids*

A. Bidder will perform the following Work at the indicated unit prices as shown in the Bid Schedule.

B. Bidder acknowledges that:

1. each Bid Unit Price includes an amount considered by Bidder to be adequate to cover Contractor's overhead and profit for each separately identified item, and

2. estimated quantities are not guaranteed, and are solely for the purpose of comparison of Bids, and final payment for all Unit Price Work will be based on actual quantities, determined as provided in the Contract Documents.

3.03 *Total Bid Price (Lump Sum and Unit Prices)*

Copyright© 2018 National Society of Professional Engineers, American Council of Engineering Companies, and American Society of Civil Engineers. All rights reserved.

BID SCHEDULE - Exhibit "A"

PROPOSED
WILLAMSTOWN DRAINAGE REPAIRS
FOR THE
WV ARMY NATIONAL GUARD
WOOD COUNTY, WEST VIRGINIA

NOTE: Bid PRICE amounts are to be shown in both words and figures. In case of discrepancy, the amount shown in words will govern. Bids shall include sales tax and all other applicable taxes and fees.

Item #	Qty.	UNIT	DESCRIPTION	UNIT PRICE	UNIT PRICE WRITTEN IN WORDS	TOTAL PRICE
1	1	LS	MOBILIZATION	$27,000.00	Twenty Seven Thousand Dollars and	$27,000.00
2	400	CY	UNCLASSIFIED BORROW EXCAVATION	$71.00	Seventy one Dollars and No Cents	$28,400.00
3	1	LS	CLEARING AND GRUBBING	No Cents $23,800.00	Twenty Three Thousand Eight Hundred	$23,800.00
4	202	LF	12" HDPE PIPE	$92.00	Ninety Two Dollars and No Cents	$18,584.00
5	564	LF	18" HDPE PIPE	Dollars and No Cent $93.00	Ninety Three Dollars and No Cents	$52,452.00

Copyright© 2018 National Society of Professional Engineers, American Council of Engineering Companies, and American Society of Civil Engineers. All rights reserved.

Item #	Qty.	UNIT	DESCRIPTION	UNIT PRICE	UNIT PRICE WRITTEN IN WORDS	TOTAL PRICE
6	134	LF	24" HPDE PIPE	$185.00	One Hundred Eighty Five Dollars	$24,790.00
7	12	EA	TYPE B INLET	$4,230.00	Four Thousand Two Hundred Thirty	$50,760.00
8	6	EA	MODIFIED TYPE B INLET	$6,150.00	Six Thousand One Hundred Fifty	$36,900.00
9	1	EA	TIE INTO EXISTING INLET	$2,600.00	Two Thousand Six Hundred Dollars	$2,600.00
10	1	EA	WINGWALL (18") W/ OUTLET PROTECTION	$7,100.00	Seven Thousand One Hundred	$7,100.00
11	1	EA	WINGWALL (12") W/ OUTLET PROTECTION	$7,100.00	Seven Thousand One Hundred	$7,100.00
12	2	EA	CONCRETE ANCRHORS	$1,300.00	One Thousand Three Hundred	$2,600.00
13	275	LF	GROUTED RIPRAP CHANNEL	$255.00	Two Hundred Fifty Five Dollars	$70,125.00

Dollars and No Cents

Dollars and No Cents

and No Cents

~~Dollars and No Cents~~

~~and No Cents~~

~~Dollars and No Cents~~

Dollars and No Cents

~~Dollars and No Cents~~

Copyright© 2018 National Society of Professional Engineers, American Council of Engineering Companies, and American Society of Civil Engineers. All rights reserved.

Item #	Qty.	UNIT	DESCRIPTION	UNIT PRICE	UNIT PRICE WRITTEN IN WORDS	TOTAL PRICE
14	30	LF	GRASS LINED CHANNEL	$78.00	Seventy Eight Dollars and No Cents	$2,340.00
15	1	LS	SEED AND MULCH	$20,800.00	Twenty Thousand Eight Hundred	$20,800.00

TOTAL BID: Three Hundred Seventy Five Thousand Three Hundred Fifty One Dollars and No Cents
(Words)

Dollars and No Cents ($ 375,351.00)
(Words) (Figures)

(Amounts are to be shown in both words and figures. In case of discrepancy, the amount shown in words will govern.)

Copyright© 2018 National Society of Professional Engineers, American Council of Engineering Companies, and American Society of Civil Engineers. All rights reserved.

3.04 *Method of Award*

If at the time this contract is to be awarded, the lowest total bid submitted by a qualified, responsive, responsible Bidder does not exceed the amount of funds then estimated by the Owner, as available to finance the contract, the construction contract will be awarded. If such bids exceed such amount, the Owner may reject all bids.

ARTICLE 4—TIME OF COMPLETION

4.01 Bidder agrees that the Work will be substantially complete and will be completed and ready for final payment on or before the dates or within the number of calendar days indicated in the Agreement.

4.02 Bidder accepts the provisions of the Specifications as to liquidated damages.

ARTICLE 5—BIDDER'S ACKNOWLEDGEMENTS: ACCEPTANCE PERIOD, INSTRUCTIONS, AND RECEIPT OF ADDENDA

5.01 *Bid Acceptance Period*

A. This Bid will remain subject to acceptance for 90 days after the Bid opening, or for such longer period of time that Bidder may agree to in writing upon request of Owner.

5.02 *Instructions to Bidders*

A. Bidder accepts all of the terms and conditions of the Instructions to Bidders, including without limitation those dealing with the disposition of Bid security.

ARTICLE 6—BIDDER'S REPRESENTATIONS AND CERTIFICATIONS

6.01 *Bidder's Representations*

A. In submitting this Bid, Bidder represents the following:

1. Bidder has examined and carefully studied the Bidding Documents, including Addenda.
2. Bidder has visited the Site, conducted a thorough visual examination of the Site and adjacent areas, and become familiar with the general, local, and Site conditions that may affect cost, progress, and performance of the Work.
3. Bidder is familiar with all Laws and Regulations that may affect cost, progress, and performance of the Work**.**
4. Bidder has carefully studied the reports of explorations and tests of subsurface conditions at or adjacent to the Site and the drawings of physical conditions relating to existing surface or subsurface structures at the Site that have been identified in the Supplementary Conditions, with respect to the Technical Data in such reports and drawings.
5. Bidder has carefully studied the reports and drawings relating to Hazardous Environmental Conditions, if any, at or adjacent to the Site that have been identified in the Supplementary Conditions, with respect to Technical Data in such reports and drawings.
6. Bidder has considered the information known to Bidder itself; information commonly known to contractors doing business in the locality of the Site; information and observations obtained from visits to the Site; the Bidding Documents; and the Technical Data identified in the Supplementary Conditions or by definition, with respect to the effect of such information, observations, and Technical Data on (a) the cost, progress, and

Copyright© 2018 National Society of Professional Engineers, American Council of Engineering Companies, and American Society of Civil Engineers. All rights reserved.

performance of the Work; (b) the means, methods, techniques, sequences, and procedures of construction to be employed by Bidder, if selected as Contractor; and (c) Bidder's (Contractor's) safety precautions and programs.

7. Based on the information and observations referred to in the preceding paragraph, Bidder agrees that no further examinations, investigations, explorations, tests, studies, or data are necessary for the performance of the Work at the Contract Price, within the Contract Times, and in accordance with the other terms and conditions of the Contract.

8. Bidder is aware of the general nature of work to be performed by Owner and others at the Site that relates to the Work as indicated in the Bidding Documents.

9. Bidder has given Engineer written notice of all conflicts, errors, ambiguities, or discrepancies that Bidder has discovered in the Bidding Documents, and of discrepancies between Site conditions and the Contract Documents, and the written resolution thereof by Engineer is acceptable to Contractor.

10. The Bidding Documents are generally sufficient to indicate and convey understanding of all terms and conditions for performance and furnishing of the Work.

11. The submission of this Bid constitutes an incontrovertible representation by Bidder that without exception the Bid and all prices in the Bid are premised upon performing and furnishing the Work required by the Bidding Documents.

6.02 *Bidder's Certifications*

A. The Bidder certifies the following:

1. This Bid is genuine and not made in the interest of or on behalf of any undisclosed individual or entity and is not submitted in conformity with any collusive agreement or rules of any group, association, organization, or corporation.

2. Bidder has not directly or indirectly induced or solicited any other Bidder to submit a false or sham Bid.

3. Bidder has not solicited or induced any individual or entity to refrain from bidding.

4. Bidder has not engaged in corrupt, fraudulent, collusive, or coercive practices in competing for the Contract. For the purposes of this Paragraph 8.02.A:

a. Corrupt practice means the offering, giving, receiving, or soliciting of anything of value likely to influence the action of a public official in the bidding process.

b. Fraudulent practice means an intentional misrepresentation of facts made (a) to influence the bidding process to the detriment of Owner, (b) to establish bid prices at artificial non-competitive levels, or (c) to deprive Owner of the benefits of free and open competition.

c. Collusive practice means a scheme or arrangement between two or more Bidders, with or without the knowledge of Owner, a purpose of which is to establish bid prices at artificial, non-competitive levels.

d. Coercive practice means harming or threatening to harm, directly or indirectly, persons or their property to influence their participation in the bidding process or affect the execution of the Contract.

Copyright© 2018 National Society of Professional Engineers, American Council of Engineering Companies, and American Society of Civil Engineers. All rights reserved.

BIDDER hereby submits this Bid as set forth above:

Bidder:

McClanahan Construction Company, LLC
(typed or printed name of organization)

By: Bruce D. McClanahan
(individual's signature)

Name: Bruce D. McClanahan
(typed or printed)

Title: Managing Member
(typed or printed)

Date: September 10, 2026
(typed or printed)

If Bidder is a corporation, a partnership, or a joint venture, attach evidence of authority to sign.

Attest: Bruce D. McClanahan
(individual's signature)

Name: Bruce D. McClanahan
(typed or printed)

Title: Managing Member
(typed or printed)

Date: September 10, 2026
(typed or printed)

Address for giving notices:
744 Poca River Rd N
Poca, WV 25159

Bidder's Contact:

Name: Bruce D. McClanahan
(typed or printed)

Title: Managing Member
(typed or printed)

Phone: 304-776-3355

Email: bruce@mcclanahanconstruction.com

Address:
744 Poca River Rd N
Poca, WV 25159

Bidder's Contractor License No.: (if applicable) WVCL #004165

Copyright© 2018 National Society of Professional Engineers, American Council of Engineering Companies, and American Society of Civil Engineers. All rights reserved.

CONDITIONS OF WORK

AIA® Document G714® – 2017

Construction Change Directive

PROJECT: *(name and address)*	**CONTRACT INFORMATION:**	**CCD INFORMATION:**
Williamstown Drainage Repairs	Contract For:	Directive Number:
Wood County, WV	Date: 08-06-2026	Date:
OWNER: *(name and address)*	**ARCHITECT:** *(name and address)*	**CONTRACTOR:** *(name and address)*
West Virginia Army National Guard 1707 Coonskin Drive Charleston, WV, WV 25311	The Thrasher Group, Inc P.O. Box 940 600 White Oaks Blvd. Bridgeport, WV 26330	

The Contractor is hereby directed to make the following change(s) in this Contract:
(Insert a detailed description of the change and, if applicable, attach or reference specific exhibits.)

PROPOSED ADJUSTMENTS

1. The proposed basis of adjustment to the Contract Sum or Guaranteed Maximum Price is:

[ ] Lump Sum unchanged $ 0.00

[ ] Unit Price of $ 0.00 per

[ ] Cost, as defined below, plus the following fee: 0.00
(Insert a definition of, or method for determining, cost)

[ ] As follows:

2. The Contract Time will be unchanged by (0) days.

NOTE: The Owner, Architect and Contractor should execute a Change Order to supersede this Construction Change Directive to the extent they agree upon adjustments to the Contract Sum, Contract Time, or Guaranteed Maximum price for the change(s) described herein.

When signed by the Owner and Architect and received by the Contractor, this document becomes effective IMMEDIATELY as a Construction Change Directive (CCD), and the Contractor shall proceed with the change(s) described above.

Contractor signature indicates agreement with the proposed adjustments in Contract Sum and Contract Time set forth in this CCD.

ARCHITECT *(Signature)*	**OWNER** *(Signature)*	**CONTRACTOR** *(Signature)*
(Printed name, title, and license number if required)	*(Printed name and title)*	*(Printed name and title)*
Date	*Date*	*Date*

DRAFT

AIA Document G714 – 2017. Copyright © 2001, 2007 and 2017. All rights reserved. "The American Institute of Architects," "American Institute of Architects," "AIA," the AIA Logo, and "AIA Contract Documents" are trademarks of The American Institute of Architects. This draft was produced at 20:19:31 EDT on 08/06/2026 under Subscription No.20250146710 which expires on 08/21/2026, is not for resale, is licensed for one-time use only, and may only be used in accordance with the AIA Contract Documents® Terms of Service. To report copyright violations, e-mail docinfo@aiacontracts.com.
User Notes: (6a74eb79102bfc0b7b1bee6d)

AIA® Document G701® – 2017

Change Order

PROJECT: *(Name and address)*	**CONTRACT INFORMATION:**	**CHANGE ORDER INFORMATION:**
Williamstown Drainage Repairs Wood County, WV	Contract For: Date: 08-06-2026	Change Order Number: 001 Date:
OWNER: *(Name and address)* West Virginia Army National Guard 1707 Coonskin Drive Charleston, WV, WV 25311	**ARCHITECT:** *(Name and address)* The Thrasher Group, Inc P.O. Box 940 600 White Oaks Blvd. Bridgeport, WV 26330	**CONTRACTOR:** *(Name and address)*

THE CONTRACT IS CHANGED AS FOLLOWS:
(Insert a detailed description of the change and, if applicable, attach or reference specific exhibits. Also include agreed upon adjustments attributable to executed Construction Change Directives.)

The original Contract Sum was	$ 0.00
The net change by previously authorized Change Orders	$ 0.00
The Contract Sum prior to this Change Order was	$ 0.00
The Contract Sum will be unchanged by this Change Order in the amount of	$ 0.00
The new Contract Sum including this Change Order will be	$ 0.00

The Contract Time will be unchanged by ( ) days.
The new date of Substantial Completion will be

NOTE: This Change Order does not include adjustments to the Contract Sum or Guaranteed Maximum Price, or the Contract Time, that have been authorized by Construction Change Directive until the cost and time have been agreed upon by both the Owner and Contractor, in which case a Change Order is executed to supersede the Construction Change Directive.

NOT VALID UNTIL SIGNED BY THE ARCHITECT, CONTRACTOR AND OWNER.

ARCHITECT *(Signature)*	**CONTRACTOR** *(Signature)*	**OWNER** *(Signature)*
(Printed name, title, and license number if required)	*(Printed name and title)*	*(Printed name and title)*
Date	*Date*	*Date*

DRAFT

AIA Document G701 – 2017. Copyright © 1979, 1987, 2000 , 2001 and 2017. All rights reserved. "The American Institute of Architects," "American Institute of Architects," "AIA," the AIA Logo, and "AIA Contract Documents" are trademarks of The American Institute of Architects. This draft was produced at 20:21:36 EDT on 08/06/2026 under Subscription No.20250146710 which expires on 08/21/2026, is not for resale, is licensed for one-time use only, and may only be used in accordance with the AIA Contract Documents® Terms of Service. To report copyright violations, e-mail docinfo@aiacontracts.com.
User Notes: (6a74ecb8102bfc0b7b1bee9b)

AIA® Document G702® – 1992

Application and Certificate for Payment

TO OWNER:	West Virginia Army National Guard 1707 Coonskin Drive Charleston, WV, WV 25311	**PROJECT:**	Williamstown Drainage Repairs WV	**APPLICATION NO:** 001	**Distribution to:**
				PERIOD TO: August 6, 2026	OWNER : [ ] ARCHITECT : [ ]
				CONTRACT FOR:	CONTRACTOR : [ ]
FROM		**VIA**	The Thrasher Group, Inc	**CONTRACT DATE:**	FIELD : [ ]
CONTRACTOR:		**ARCHITECT:**	P.O. Box 940 600 White Oaks Blvd. Bridgeport, WV 26330	**PROJECT NOS:** T80-11652/ /	OTHER : [ ]

CONTRACTOR'S APPLICATION FOR PAYMENT

Application is made for payment, as shown below, in connection with the Contract. AIA Document G703®, Continuation Sheet, is attached.

1. ORIGINALCONTRACT SUM..... $0.00

2. NET CHANGE BY CHANGE ORDERS..... $0.00

3. CONTRACT SUM TO DATE(Line 1 ± 2)..... $0.00

4. TOTAL COMPLETED & STORED TO DATE(Column G on G703)..... $0.00

5. RETAINAGE:

a. 0.00% of Completed Work
(Column D + E on G703: $0.00)= $0.00

b. 0.00% of Stored Material
(Column F on G703: $0.00)= $0.00

Total Retainage (Lines 5a + 5b or Total in Column I of G703)..... $0.00

6. TOTAL EARNED LESS RETAINAGE..... $0.00
(Line 4 Less Line 5 Total)

7. LESS PREVIOUS CERTIFICATES FOR PAYMENT..... $0.00
(Line 6 from prior Certificate)

8. CURRENT PAYMENT DUE..... $0.00

9. BALANCE TO FINISH, INCLUDING RETAINAGE
(Line 3 less Line 6) $0.00

CHANGE ORDER SUMMARY	ADDITIONS	DEDUCTIONS
Total changes approved in previous months by Owner	$0.00	$0.00
Total approved this Month	$0.00	$0.00
TOTALS	$0.00	$0.00
NET CHANGES by Change Order		$0.00

The undersigned Contractor certifies that to the best of the Contractor's knowledge, information and belief the Work covered by this Application for Payment has been completed in accordance with the Contract Documents, that all amounts have been paid by the Contractor for Work for which previous Certificates for Payment were issued and payments received from the Owner, and that current payment shown herein is now due.

CONTRACTOR:

By: _____ Date: _____

State of:

County of:

Subscribed and sworn to before me this day of

Notary Public:

My Commission expires:

ARCHITECT'S CERTIFICATE FOR PAYMENT

In accordance with the Contract Documents, based on on-site observations and the data comprising this application, the Architect certifies to the Owner that to the best of the Architect's knowledge, information and belief the Work has progressed as indicated, the quality of the Work is in accordance with the Contract Documents, and the Contractor is entitled to payment of the AMOUNT CERTIFIED.

AMOUNT CERTIFIED..... $0.00

(Attach explanation if amount certified differs from the amount applied. Initial all figures on this Application and on the Continuation Sheet that are changed to conform with the amount certified.)

ARCHITECT:

By: _____ Date: _____

This Certificate is not negotiable. The AMOUNT CERTIFIED is payable only to the Contractor named herein. Issuance, payment and acceptance of payment are without prejudice to any rights of the Owner or Contractor under this Contract.

DRAFT

AIA Document G702 – 1992. Copyright © 1953, 1963, 1965, 1971, 1978, 1983 and 1992. All rights reserved. "The American Institute of Architects," "American Institute of Architects," "AIA," the AIA Logo, and "AIA Contract Documents" are trademarks of The American Institute of Architects. This document was produced at 20:23:13 EDT on 08/06/2026 under Subscription No.20250146710 which expires on 08/21/2026, is not for resale, is licensed for one-time use only, and may only be used in accordance with the AIA Contract Documents® Terms of Service. To report copyright violations, e-mail docinfo@aiacontracts.com.

AIA® Document G703® – 1992

Continuation Sheet

AIA Document G702®, Application and Certification for Payment, or G732™, Application and Certificate for Payment, Construction Manager as Adviser Edition, containing Contractor's signed certification is attached.
Use Column I on Contracts where variable retainage for line items may apply.

Williamstown Drainage Repairs
WV

APPLICATION NO:	001
APPLICATION DATE:	08-06-2026
PERIOD TO:	August 6, 2026
ARCHITECT'S PROJECT NO:	T80-11652

A	B	C	D	E	F	G		H	I
			WORK COMPLETED						
ITEM NO.	DESCRIPTION OF WORK	SCHEDULED VALUE	FROM PREVIOUS APPLICATION (D + E)	THIS PERIOD	MATERIALS PRESENTLY STORED (NOT IN D OR E)	TOTAL COMPLETED AND STORED TO DATE (D + E + F)	% (G÷C)	BALANCE TO FINISH (C - G)	RETAINAGE (IF VARIABLE RATE)
		0.00	0.00	0.00	0.00	0.00	0.00%	0.00	0.00
		0.00	0.00	0.00	0.00	0.00	0.00%	0.00	0.00
		0.00	0.00	0.00	0.00	0.00	0.00%	0.00	0.00
		0.00	0.00	0.00	0.00	0.00	0.00%	0.00	0.00
		0.00	0.00	0.00	0.00	0.00	0.00%	0.00	0.00
		0.00	0.00	0.00	0.00	0.00	0.00%	0.00	0.00
		0.00	0.00	0.00	0.00	0.00	0.00%	0.00	0.00
		0.00	0.00	0.00	0.00	0.00	0.00%	0.00	0.00
		0.00	0.00	0.00	0.00	0.00	0.00%	0.00	0.00
		0.00	0.00	0.00	0.00	0.00	0.00%	0.00	0.00
		0.00	0.00	0.00	0.00	0.00	0.00%	0.00	0.00
		0.00	0.00	0.00	0.00	0.00	0.00%	0.00	0.00
		0.00	0.00	0.00	0.00	0.00	0.00%	0.00	0.00
		0.00	0.00	0.00	0.00	0.00	0.00%	0.00	0.00
		0.00	0.00	0.00	0.00	0.00	0.00%	0.00	0.00
		0.00	0.00	0.00	0.00	0.00	0.00%	0.00	0.00
		0.00	0.00	0.00	0.00	0.00	0.00%	0.00	0.00
		0.00	0.00	0.00	0.00	0.00	0.00%	0.00	0.00
		0.00	0.00	0.00	0.00	0.00	0.00%	0.00	0.00
		0.00	0.00	0.00	0.00	0.00	0.00%	0.00	0.00
		0.00	0.00	0.00	0.00	0.00	0.00%	0.00	0.00
	GRAND TOTAL	**0.00**	**0.00**	**0.00**	**0.00**	**0.00**	**0.00%**	**0.00**	**0.00**

DRAFT

AIA Document G703 – 1992. Copyright © 1963, 1965, 1966, 1967,1970, 1978, 1983 and 1992. All rights reserved. "The American Institute of Architects," "American Institute of Architects," "AIA," the AIA Logo, and "AIA Contract Documents" are trademarks of The American Institute of Architects. This document was produced at 20:23:13 EDT on 08/06/2026 under Subscription No.20250146710 which expires on 08/21/2026, is not for resale, is licensed for one-time use only, and may only be used in accordance with the AIA Contract Documents® Terms of Service. To report copyright violations, e-mail docinfo@aiacontracts.com.

AIA® Document G704® – 2017

Certificate of Substantial Completion

PROJECT: *(name and address)*	**CONTRACT INFORMATION:**	**CERTIFICATE INFORMATION:**
Williamstown Drainage Repairs Wood County, WV	Contract For: Date: 08-06-2026	Certificate Number: Date:
OWNER: *(name and address)*	**ARCHITECT:** *(name and address)*	**CONTRACTOR:** *(name and address)*
West Virginia Army National Guard 1707 Coonskin Drive Charleston, WV, WV 25311	The Thrasher Group, Inc P.O. Box 940 600 White Oaks Blvd. Bridgeport, WV 26330	

The Work identified below has been reviewed and found, to the Architect s best knowledge, information, and belief, to be substantially complete. Substantial Completion is the stage in the progress of the Work when the Work or designated portion is sufficiently complete in accordance with the Contract Documents so that the Owner can occupy or utilize the Work for its intended use. The date of Substantial Completion of the Project or portion designated below is the date established by this Certificate.
(Identify the Work, or portion thereof, that is substantially complete.)

ARCHITECT *(Signature)*	*(Printed name, title, and license number if required)*	*Date Of Substantial Completion*

WARRANTIES
The date of Substantial Completion of the Project or portion designated above is also the date of commencement of applicable warranties required by the Contract Documents, except as stated below:
(Identify warranties that do not commence on the date of Substantial Completion, if any, and indicate their date of commencement.)

WORK TO BE COMPLETED OR CORRECTED
A list of items to be completed or corrected is attached hereto, or transmitted as agreed upon by the parties, and identified as follows:
(Identify the list of Work to be completed or corrected.)

The failure to include any items on such list does not alter the responsibility of the Contractor to complete all Work in accordance with the Contract Documents. Unless otherwise agreed to in writing, the date of commencement of warranties for items on the attached list will be the date of issuance of the final Certificate of Payment or the date of final payment, whichever occurs first. The Contractor will complete or correct the Work on the list of items attached hereto within ( ) days from the above date of Substantial Completion.

Cost estimate of Work to be completed or corrected: $

The responsibilities of the Owner and Contractor for security, maintenance, heat, utilities, damage to the Work, insurance, and other items identified below shall be as follows:
(Note: Owner s and Contractor s legal and insurance counsel should review insurance requirements and coverage.)

The Owner and Contractor hereby accept the responsibilities assigned to them in this Certificate of Substantial Completion:

CONTRACTOR *(Signature)*	*(Printed name and title)*	*Date*
OWNER *(Signature)*	*(Printed name and title)*	*Date*

DRAFT

AIA Document G704 – 2017. Copyright © 1963, 1978, 1992, 2000 and 2017. All rights reserved. "The American Institute of Architects," "American Institute of Architects," "AIA," the AIA Logo, and "AIA Contract Documents" are trademarks of The American Institute of Architects. This draft was produced at 20:26:00 EDT on 08/06/2026 under Subscription No.20250146710 which expires on 08/21/2026, is not for resale, is licensed for one-time use only, and may only be used in accordance with the AIA Contract Documents® Terms of Service. To report copyright violations, e-mail docinfo@aiacontracts.com.
User Notes: (6a74edc8102bfc0b7b1beec3)

AIA® Document G707™ – 1994

Consent of Surety to Final Payment

PROJECT: *(Name and address)*

Williamstown Drainage Repairs

Wood County, WV

ARCHITECT'S PROJECT NUMBER:
T80-11652

CONTRACT FOR:

CONTRACT DATED:
08-06-2026

OWNER: [ ]
ARCHITECT: [ ]
CONTRACTOR: [ ]
SURETY: [ ]
OTHER: [ ]

TO OWNER: *(Name and address)*
West Virginia Army National Guard
1707 Coonskin Drive
Charleston, WV, WV 25311

In accordance with the provisions of the Contract between the Owner and the Contractor as indicated above, the
(Insert name and address of Surety)

, SURETY,

on bond of
(Insert name and address of Contractor)

, CONTRACTOR,

hereby approves of the final payment to the Contractor, and agrees that final payment to the Contractor shall not relieve the Surety of any of its obligations to
(Insert name and address of Owner)

West Virginia Army National Guard
1707 Coonskin Drive
Charleston, WV, WV 25311

, OWNER,

as set forth in said Surety's bond.

IN WITNESS WHEREOF, the Surety has hereunto set its hand on this date:
(Insert in writing the month followed by the numeric date and year.)

SURETY *(Signature)*

Attest:
(Seal):

(Printed name and title)

DRAFT

AIA Document G707 – 1994. Copyright © 1982 and 1994. All rights reserved. "The American Institute of Architects," "American Institute of Architects," "AIA," the AIA Logo, and "AIA Contract Documents" are trademarks of The American Institute of Architects. This draft was produced at 20:27:50 EDT on 08/06/2026 under Subscription No.20250146710 which expires on 08/21/2026, is not for resale, is licensed for one-time use only, and may only be used in accordance with the AIA Contract Documents® Terms of Service. To report copyright violations, e-mail docinfo@aiacontracts.com.
User Notes: (6a74ee29102bfc0b7b1beecb)

AIA® Document G707A™ – 1994

Consent of Surety to Reduction in or Partial Release of Retainage

PROJECT: *(Name and address)*
Williamstown Drainage Repairs

Wood County, WV

ARCHITECT'S PROJECT NUMBER:
T80-11652
CONTRACT FOR:

CONTRACT DATED:
08-06-2026

OWNER: [ ]
ARCHITECT: [ ]
CONTRACTOR: [ ]
SURETY: [ ]
OTHER: [ ]

TO OWNER: *(Name and address)*
West Virginia Army National Guard
1707 Coonskin Drive
Charleston, WV, WV 25311

In accordance with the provisions of the Contract between the Owner and the Contractor as indicated above, the
(Insert name and address of Surety)

, SURETY,

on bond of
(Insert name and address of Contractor)

, CONTRACTOR,

hereby approves the reduction in or partial release of retainage to the Contractor as follows:

The Surety agrees that such reduction in or partial release of retainage to the Contractor shall not relieve the Surety of any of its obligations to
(Insert name and address of Owner)

West Virginia Army National Guard
1707 Coonskin Drive
Charleston, WV, WV 25311

, OWNER,

as set forth in said Surety's bond.

IN WITNESS WHEREOF, the Surety has hereunto set its hand on this date:
(Insert in writing the month followed by the numeric date and year.)

SURETY *(Signature)*

Attest:
(Seal):

(Printed name and title)

DRAFT

AIA Document G707A – 1994. Copyright © 1971, 1982 and 1994. All rights reserved. "The American Institute of Architects," "American Institute of Architects," "AIA," the AIA Logo, and "AIA Contract Documents" are trademarks of The American Institute of Architects. This draft was produced at 20:29:10 EDT on 08/06/2026 under Subscription No.20250146710 which expires on 08/21/2026, is not for resale, is licensed for one-time use only, and may only be used in accordance with the AIA Contract Documents® Terms of Service. To report copyright violations, e-mail docinfo@aiacontracts.com.
User Notes: (6a74ee75102bfc0b7b1beed3)

AIA® Document A201® – 2017

General Conditions of the Contract for Construction

for the following PROJECT:
(Name and location or address)

Williamstown Drainage Repairs
Wood County,WV

THE OWNER:
(Name, legal status and address)

West Virginia Army National Guard
1707 Coonskin Drive
Charleston, WV, WV 25311

THE ARCHITECT:
(Name, legal status and address)

The Thrasher Group, Inc
P.O. Box 940 600 White Oaks Blvd.
Bridgeport, WV 26330

ADDITIONS AND DELETIONS:
The author of this document may have revised the text of the original AIA standard form. An *Additions and Deletions Report* that notes revisions to the standard form text is available from the author and should be reviewed. A vertical line in the left margin of this document indicates where the author has added to or deleted from the original AIA text.

This document has important legal consequences. Consultation with an attorney is encouraged with respect to its completion or modification.

For guidance in modifying this document to include supplementary conditions, see AIA Document A503™–2017, Guide for Supplementary Conditions.

TABLE OF ARTICLES

1 GENERAL PROVISIONS

2 OWNER

3 CONTRACTOR

4 ARCHITECT

5 SUBCONTRACTORS

6 CONSTRUCTION BY OWNER OR BY SEPARATE CONTRACTORS

7 CHANGES IN THE WORK

8 TIME

9 PAYMENTS AND COMPLETION

10 PROTECTION OF PERSONS AND PROPERTY

11 INSURANCE AND BONDS

12 UNCOVERING AND CORRECTION OF WORK

13 MISCELLANEOUS PROVISIONS

AIA Document A201 – 2017. Copyright © 1911, 1915, 1918, 1925, 1937, 1951, 1958, 1961, 1963, 1966, 1970, 1976, 1987, 1997, 2007 and 2017. All rights reserved. "The American Institute of Architects," "American Institute of Architects," "AIA," the AIA Logo, and "AIA Contract Documents" are trademarks of The American Institute of Architects. This document was produced at 20:31:18 EDT on 08/06/2026 under Subscription No.20250146710 which expires on 08/21/2026, is not for resale, is licensed for one-time use only, and may only be used in accordance with the AIA Contract Documents® Terms of Service. To report copyright violations, e-mail docinfo@aiacontracts.com.
User Notes: (6a74eee42a65beba85b6bb3c)

14 TERMINATION OR SUSPENSION OF THE CONTRACT

15 CLAIMS AND DISPUTES

AIA Document A201 – 2017. Copyright © 1911, 1915, 1918, 1925, 1937, 1951, 1958, 1961, 1963, 1966, 1970, 1976, 1987, 1997, 2007 and 2017. All rights reserved. "The American Institute of Architects," "American Institute of Architects," "AIA," the AIA Logo, and "AIA Contract Documents" are trademarks of The American Institute of Architects. This document was produced at 20:31:18 EDT on 08/06/2026 under Subscription No.20250146710 which expires on 08/21/2026, is not for resale, is licensed for one-time use only, and may only be used in accordance with the AIA Contract Documents® Terms of Service. To report copyright violations, e-mail docinfo@aiacontracts.com.
User Notes: (6a74eee42a65beba85b6bb3c)

INDEX
(Topics and numbers in bold are Section headings.)

Acceptance of Nonconforming Work
9.6.6, 9.9.3, **12.3**
Acceptance of Work
9.6.6, 9.8.2, 9.9.3, 9.10.1, 9.10.3, 12.3
Access to Work
3.16, 6.2.1, 12.1
Accident Prevention
10
Acts and Omissions
3.2, 3.3.2, 3.12.8, 3.18, 4.2.3, 8.3.1, 9.5.1, 10.2.5, 10.2.8, 13.3.2, 14.1, 15.1.2, 15.2
Addenda
1.1.1
Additional Costs, Claims for
3.7.4, 3.7.5, 10.3.2, 15.1.5
Additional Inspections and Testing
9.4.2, 9.8.3, 12.2.1, **13.4**
Additional Time, Claims for
3.2.4, 3.7.4, 3.7.5, 3.10.2, 8.3.2, **15.1.6**
Administration of the Contract
3.1.3, **4.2**, 9.4, 9.5
Advertisement or Invitation to Bid
1.1.1
Aesthetic Effect
4.2.13
Allowances
3.8
Applications for Payment
4.2.5, 7.3.9, 9.2, **9.3**, 9.4, 9.5.1, 9.5.4, 9.6.3, 9.7, 9.10
Approvals
2.1.1, 2.3.1, 2.5, 3.1.3, 3.10.2, 3.12.8, 3.12.9, 3.12.10.1, 4.2.7, 9.3.2, 13.4.1
Arbitration
8.3.1, 15.3.2, **15.4**
ARCHITECT
4
Architect, Definition of
4.1.1
Architect, Extent of Authority
2.5, 3.12.7, 4.1.2, 4.2, 5.2, 6.3, 7.1.2, 7.3.4, 7.4, 9.2, 9.3.1, 9.4, 9.5, 9.6.3, 9.8, 9.10.1, 9.10.3, 12.1, 12.2.1, 13.4.1, 13.4.2, 14.2.2, 14.2.4, 15.1.4, 15.2.1
Architect, Limitations of Authority and Responsibility
2.1.1, 3.12.4, 3.12.8, 3.12.10, 4.1.2, 4.2.1, 4.2.2, 4.2.3, 4.2.6, 4.2.7, 4.2.10, 4.2.12, 4.2.13, 5.2.1, 7.4, 9.4.2, 9.5.4, 9.6.4, 15.1.4, 15.2
Architect's Additional Services and Expenses
2.5, 12.2.1, 13.4.2, 13.4.3, 14.2.4
Architect's Administration of the Contract
3.1.3, 3.7.4, 15.2, 9.4.1, 9.5
Architect's Approvals
2.5, 3.1.3, 3.5, 3.10.2, 4.2.7
Architect's Authority to Reject Work
3.5, 4.2.6, 12.1.2, 12.2.1
Architect's Copyright
1.1.7, 1.5
Architect's Decisions
3.7.4, 4.2.6, 4.2.7, 4.2.11, 4.2.12, 4.2.13, 4.2.14, 6.3, 7.3.4, 7.3.9, 8.1.3, 8.3.1, 9.2, 9.4.1, 9.5, 9.8.4, 9.9.1, 13.4.2, 15.2
Architect's Inspections
3.7.4, 4.2.2, 4.2.9, 9.4.2, 9.8.3, 9.9.2, 9.10.1, 13.4
Architect's Instructions
3.2.4, 3.3.1, 4.2.6, 4.2.7, 13.4.2
Architect's Interpretations
4.2.11, 4.2.12
Architect's Project Representative
4.2.10
Architect's Relationship with Contractor
1.1.2, 1.5, 2.3.3, 3.1.3, 3.2.2, 3.2.3, 3.2.4, 3.3.1, 3.4.2, 3.5, 3.7.4, 3.7.5, 3.9.2, 3.9.3, 3.10, 3.11, 3.12, 3.16, 3.18, 4.1.2, 4.2, 5.2, 6.2.2, 7, 8.3.1, 9.2, 9.3, 9.4, 9.5, 9.7, 9.8, 9.9, 10.2.6, 10.3, 11.3, 12, 13.3.2, 13.4, 15.2
Architect's Relationship with Subcontractors
1.1.2, 4.2.3, 4.2.4, 4.2.6, 9.6.3, 9.6.4, 11.3
Architect's Representations
9.4.2, 9.5.1, 9.10.1
Architect's Site Visits
3.7.4, 4.2.2, 4.2.9, 9.4.2, 9.5.1, 9.9.2, 9.10.1, 13.4
Asbestos
10.3.1
Attorneys' Fees
3.18.1, 9.6.8, 9.10.2, 10.3.3
Award of Separate Contracts
6.1.1, 6.1.2
Award of Subcontracts and Other Contracts for Portions of the Work
5.2
Basic Definitions
1.1
Bidding Requirements
1.1.1
Binding Dispute Resolution
8.3.1, 9.7, 11.5, 13.1, 15.1.2, 15.1.3, 15.2.1, 15.2.5, 15.2.6.1, 15.3.1, 15.3.2, 15.3.3, 15.4.1
Bonds, Lien
7.3.4.4, 9.6.8, 9.10.2, 9.10.3
Bonds, Performance, and Payment
7.3.4.4, 9.6.7, 9.10.3, **11.1.2**, 11.1.3, **11.5**
Building Information Models Use and Reliance
1.8
Building Permit
3.7.1
Capitalization
1.3
Certificate of Substantial Completion
9.8.3, 9.8.4, 9.8.5
Certificates for Payment
4.2.1, 4.2.5, 4.2.9, 9.3.3, **9.4**, 9.5, 9.6.1, 9.6.6, 9.7, 9.10.1, 9.10.3, 14.1.1.3, 14.2.4, 15.1.4
Certificates of Inspection, Testing or Approval
13.4.4
Certificates of Insurance
9.10.2
Change Orders

AIA Document A201 – 2017. Copyright © 1911, 1915, 1918, 1925, 1937, 1951, 1958, 1961, 1963, 1966, 1970, 1976, 1987, 1997, 2007 and 2017. All rights reserved. "The American Institute of Architects," "American Institute of Architects," "AIA," the AIA Logo, and "AIA Contract Documents" are trademarks of The American Institute of Architects. This document was produced at 20:31:18 EDT on 08/06/2026 under Subscription No.20250146710 which expires on 08/21/2026, is not for resale, is licensed for one-time use only, and may only be used in accordance with the AIA Contract Documents® Terms of Service. To report copyright violations, e-mail docinfo@aiacontracts.com.
User Notes: (6a74eee42a65beba85b6bb3c)

1.1.1, 3.4.2, 3.7.4, 3.8.2.3, 3.11, 3.12.8, 4.2.8, 5.2.3, 7.1.2, 7.1.3, **7.2**, 7.3.2, 7.3.7, 7.3.9, 7.3.10, 8.3.1, 9.3.1.1, 9.10.3, 10.3.2, 11.2, 11.5, 12.1.2
Change Orders, Definition of
7.2.1
CHANGES IN THE WORK
2.2.2, 3.11, 4.2.8, **7**, 7.2.1, 7.3.1, 7.4, 8.3.1, 9.3.1.1, 11.5
Claims, Definition of
15.1.1
Claims, Notice of
1.6.2, 15.1.3
CLAIMS AND DISPUTES
3.2.4, 6.1.1, 6.3, 7.3.9, 9.3.3, 9.10.4, 10.3.3, **15**, 15.4
Claims and Timely Assertion of Claims
15.4.1
Claims for Additional Cost
3.2.4, 3.3.1, 3.7.4, 7.3.9, 9.5.2, 10.2.5, 10.3.2, **15.1.5**
Claims for Additional Time
3.2.4, 3.3.1, 3.7.4, 6.1.1, 8.3.2, 9.5.2, 10.3.2, **15.1.6**
Concealed or Unknown Conditions, Claims for
3.7.4
Claims for Damages
3.2.4, 3.18, 8.3.3, 9.5.1, 9.6.7, 10.2.5, 10.3.3, 11.3, 11.3.2, 14.2.4, 15.1.7
Claims Subject to Arbitration
15.4.1
Cleaning Up
3.15, 6.3
Commencement of the Work, Conditions Relating to
2.2.1, 3.2.2, 3.4.1, 3.7.1, 3.10.1, 3.12.6, 5.2.1, 5.2.3, 6.2.2, 8.1.2, 8.2.2, 8.3.1, 11.1, 11.2, **15.1.5**
Commencement of the Work, Definition of
8.1.2
Communications
3.9.1, **4.2.4**
Completion, Conditions Relating to
3.4.1, 3.11, 3.15, 4.2.2, 4.2.9, 8.2, 9.4.2, 9.8, 9.9.1, 9.10, 12.2, 14.1.2, 15.1.2
COMPLETION, PAYMENTS AND
9
Completion, Substantial
3.10.1, 4.2.9, 8.1.1, 8.1.3, 8.2.3, 9.4.2, 9.8, 9.9.1, 9.10.3, 12.2, 15.1.2
Compliance with Laws
2.3.2, 3.2.3, 3.6, 3.7, 3.12.10, 3.13, 9.6.4, 10.2.2, 13.1, 13.3, 13.4.1, 13.4.2, 13.5, 14.1.1, 14.2.1.3, 15.2.8, 15.4.2, 15.4.3
Concealed or Unknown Conditions
3.7.4, 4.2.8, 8.3.1, 10.3
Conditions of the Contract
1.1.1, 6.1.1, 6.1.4
Consent, Written
3.4.2, 3.14.2, 4.1.2, 9.8.5, 9.9.1, 9.10.2, 9.10.3, 13.2, 15.4.4.2
Consolidation or Joinder
15.4.4
CONSTRUCTION BY OWNER OR BY SEPARATE CONTRACTORS
1.1.4, **6**
Construction Change Directive, Definition of
7.3.1
Construction Change Directives
1.1.1, 3.4.2, 3.11, 3.12.8, 4.2.8, 7.1.1, 7.1.2, 7.1.3, **7.3**, 9.3.1.1
Construction Schedules, Contractor's
3.10, 3.11, 3.12.1, 3.12.2, 6.1.3, 15.1.6.2
Contingent Assignment of Subcontracts
5.4, 14.2.2.2
Continuing Contract Performance
15.1.4
Contract, Definition of
1.1.2
CONTRACT, TERMINATION OR SUSPENSION OF THE
5.4.1.1, 5.4.2, 11.5, **14**
Contract Administration
3.1.3, 4, 9.4, 9.5
Contract Award and Execution, Conditions Relating to
3.7.1, 3.10, 5.2, 6.1
Contract Documents, Copies Furnished and Use of
1.5.2, 2.3.6, 5.3
Contract Documents, Definition of
1.1.1
Contract Sum
2.2.2, 2.2.4, 3.7.4, 3.7.5, 3.8, 3.10.2, 5.2.3, 7.3, 7.4, **9.1**, 9.2, 9.4.2, 9.5.1.4, 9.6.7, 9.7, 10.3.2, 11.5, 12.1.2, 12.3, 14.2.4, 14.3.2, 15.1.4.2, **15.1.5, 15.2.5**
Contract Sum, Definition of
9.1
Contract Time
1.1.4, 2.2.1, 2.2.2, 3.7.4, 3.7.5, 3.10.2, 5.2.3, 6.1.5, 7.2.1.3, 7.3.1, 7.3.5, 7.3.6, 7, 7, 7.3.10, 7.4, 8.1.1, 8.2.1, 8.2.3, 8.3.1, 9.5.1, 9.7, 10.3.2, 12.1.1, 12.1.2, 14.3.2, 15.1.4.2, 15.1.6.1, 15.2.5
Contract Time, Definition of
8.1.1
CONTRACTOR
3
Contractor, Definition of
3.1, 6.1.2
Contractor's Construction and Submittal Schedules
3.10, 3.12.1, 3.12.2, 4.2.3, 6.1.3, 15.1.6.2
Contractor's Employees
2.2.4, 3.3.2, 3.4.3, 3.8.1, 3.9, 3.18.2, 4.2.3, 4.2.6, 10.2, 10.3, 11.3, 14.1, 14.2.1.1
Contractor's Liability Insurance
11.1
Contractor's Relationship with Separate Contractors and Owner's Forces
3.12.5, 3.14.2, 4.2.4, 6, 11.3, 12.2.4
Contractor's Relationship with Subcontractors
1.2.2, 2.2.4, 3.3.2, 3.18.1, 3.18.2, 4.2.4, 5, 9.6.2, 9.6.7, 9.10.2, 11.2, 11.3, 11.4
Contractor's Relationship with the Architect
1.1.2, 1.5, 2.3.3, 3.1.3, 3.2.2, 3.2.3, 3.2.4, 3.3.1, 3.4.2, 3.5.1, 3.7.4, 3.10, 3.11, 3.12, 3.16, 3.18, 4.2, 5.2, 6.2.2, 7, 8.3.1, 9.2, 9.3, 9.4, 9.5, 9.7, 9.8, 9.9, 10.2.6,

AIA Document A201 – 2017. Copyright © 1911, 1915, 1918, 1925, 1937, 1951, 1958, 1961, 1963, 1966, 1970, 1976, 1987, 1997, 2007 and 2017. All rights reserved. "The American Institute of Architects," "American Institute of Architects," "AIA," the AIA Logo, and "AIA Contract Documents" are trademarks of The American Institute of Architects. This document was produced at 20:31:18 EDT on 08/06/2026 under Subscription No.20250146710 which expires on 08/21/2026, is not for resale, is licensed for one-time use only, and may only be used in accordance with the AIA Contract Documents® Terms of Service. To report copyright violations, e-mail docinfo@aiacontracts.com.
User Notes: (6a74eee42a65beba85b6bb3c)

10.3, 11.3, 12, 13.4, 15.1.3, 15.2.1
Contractor's Representations
3.2.1, 3.2.2, 3.5, 3.12.6, 6.2.2, 8.2.1, 9.3.3, 9.8.2
Contractor's Responsibility for Those Performing the Work
3.3.2, 3.18, 5.3, 6.1.3, 6.2, 9.5.1, 10.2.8
Contractor's Review of Contract Documents
3.2
Contractor's Right to Stop the Work
2.2.2, 9.7
Contractor's Right to Terminate the Contract
14.1
Contractor's Submittals
3.10, 3.11, 3.12, 4.2.7, 5.2.1, 5.2.3, 9.2, 9.3, 9.8.2, 9.8.3, 9.9.1, 9.10.2, 9.10.3
Contractor's Superintendent
3.9, 10.2.6
Contractor's Supervision and Construction Procedures
1.2.2, 3.3, 3.4, 3.12.10, 4.2.2, 4.2.7, 6.1.3, 6.2.4, 7.1.3, 7.3.4, 7.3.6, 8.2, 10, 12, 14, 15.1.4
Coordination and Correlation
1.2, 3.2.1, 3.3.1, 3.10, 3.12.6, 6.1.3, 6.2.1
Copies Furnished of Drawings and Specifications
1.5, 2.3.6, 3.11
Copyrights
1.5, **3.17**
Correction of Work
2.5, 3.7.3, 9.4.2, 9.8.2, 9.8.3, 9.9.1, 12.1.2, **12.2**, 12.3, 15.1.3.1, 15.1.3.2, 15.2.1
Correlation and Intent of the Contract Documents
1.2
Cost, Definition of
7.3.4
Costs
2.5, 3.2.4, 3.7.3, 3.8.2, 3.15.2, 5.4.2, 6.1.1, 6.2.3, 7.3.3.3, 7.3.4, 7.3.8, 7.3.9, 9.10.2, 10.3.2, 10.3.6, 11.2, 12.1.2, 12.2.1, 12.2.4, 13.4, 14
Cutting and Patching
3.14, 6.2.5
Damage to Construction of Owner or Separate Contractors
3.14.2, 6.2.4, 10.2.1.2, 10.2.5, 10.4, 12.2.4
Damage to the Work
3.14.2, 9.9.1, 10.2.1.2, 10.2.5, 10.4, 12.2.4
Damages, Claims for
3.2.4, 3.18, 6.1.1, 8.3.3, 9.5.1, 9.6.7, 10.3.3, 11.3.2, 11.3, 14.2.4, 15.1.7
Damages for Delay
6.2.3, 8.3.3, 9.5.1.6, 9.7, 10.3.2, 14.3.2
Date of Commencement of the Work, Definition of
8.1.2
Date of Substantial Completion, Definition of
8.1.3
Day, Definition of
8.1.4
Decisions of the Architect
3.7.4, 4.2.6, 4.2.7, 4.2.11, 4.2.12, 4.2.13, 6.3, 7.3.4, 7.3.9, 8.1.3, 8.3.1, 9.2, 9.4, 9.5.1, 9.8.4, 9.9.1, 13.4.2, 14.2.2, 14.2.4, 15.1, 15.2
Decisions to Withhold Certification
9.4.1, **9.5**, 9.7, 14.1.1.3
Defective or Nonconforming Work, Acceptance, Rejection and Correction of
2.5, 3.5, 4.2.6, 6.2.3, 9.5.1, 9.5.3, 9.6.6, 9.8.2, 9.9.3, 9.10.4, 12.2.1
Definitions
1.1, 2.1.1, 3.1.1, 3.5, 3.12.1, 3.12.2, 3.12.3, 4.1.1, 5.1, 6.1.2, 7.2.1, 7.3.1, 8.1, 9.1, 9.8.1, 15.1.1
Delays and Extensions of Time
3.2, **3.7.4**, 5.2.3, 7.2.1, 7.3.1, **7.4**, **8.3**, 9.5.1, **9.7**, 10.3.2, **10.4**, 14.3.2, **15.1.6**, 15.2.5
Digital Data Use and Transmission
1.7
Disputes
6.3, 7.3.9, 15.1, 15.2
Documents and Samples at the Site
3.11
Drawings, Definition of
1.1.5
Drawings and Specifications, Use and Ownership of
3.11
Effective Date of Insurance
8.2.2
Emergencies
10.4, 14.1.1.2, **15.1.5**
Employees, Contractor's
3.3.2, 3.4.3, 3.8.1, 3.9, 3.18.2, 4.2.3, 4.2.6, 10.2, 10.3.3, 11.3, 14.1, 14.2.1.1
Equipment, Labor, or Materials
1.1.3, 1.1.6, 3.4, 3.5, 3.8.2, 3.8.3, 3.12, 3.13, 3.15.1, 4.2.6, 4.2.7, 5.2.1, 6.2.1, 7.3.4, 9.3.2, 9.3.3, 9.5.1.3, 9.10.2, 10.2.1, 10.2.4, 14.2.1.1, 14.2.1.2
Execution and Progress of the Work
1.1.3, 1.2.1, 1.2.2, 2.3.4, 2.3.6, 3.1, 3.3.1, 3.4.1, 3.7.1, 3.10.1, 3.12, 3.14, 4.2, 6.2.2, 7.1.3, 7.3.6, 8.2, 9.5.1, 9.9.1, 10.2, 10.3, 12.1, 12.2, 14.2, 14.3.1, 15.1.4
Extensions of Time
3.2.4, 3.7.4, 5.2.3, 7.2.1, 7.3, 7.4, 9.5.1, 9.7, 10.3.2, 10.4, 14.3, 15.1.6, **15.2.5**
Failure of Payment
9.5.1.3, **9.7**, 9.10.2, 13.5, 14.1.1.3, 14.2.1.2
Faulty Work
(See Defective or Nonconforming Work)
Final Completion and Final Payment
4.2.1, 4.2.9, 9.8.2, **9.10**, 12.3, 14.2.4, 14.4.3
Financial Arrangements, Owner's
2.2.1, 13.2.2, 14.1.1.4
GENERAL PROVISIONS
1
Governing Law
13.1
Guarantees (See Warranty)
Hazardous Materials and Substances
10.2.4, **10.3**
Identification of Subcontractors and Suppliers
5.2.1
Indemnification
3.17, **3.18**, 9.6.8, 9.10.2, 10.3.3, 11.3
Information and Services Required of the Owner

AIA Document A201 – 2017. Copyright © 1911, 1915, 1918, 1925, 1937, 1951, 1958, 1961, 1963, 1966, 1970, 1976, 1987, 1997, 2007 and 2017. All rights reserved. "The American Institute of Architects," "American Institute of Architects," "AIA," the AIA Logo, and "AIA Contract Documents" are trademarks of The American Institute of Architects. This document was produced at 20:31:18 EDT on 08/06/2026 under Subscription No.20250146710 which expires on 08/21/2026, is not for resale, is licensed for one-time use only, and may only be used in accordance with the AIA Contract Documents® Terms of Service. To report copyright violations, e-mail docinfo@aiacontracts.com.
User Notes: (6a74eee42a65beba85b6bb3c)

2.1.2, **2.2**, 2.3, 3.2.2, 3.12.10.1, 6.1.3, 6.1.4, 6.2.5, 9.6.1, 9.9.2, 9.10.3, 10.3.3, 11.2, 13.4.1, 13.4.2, 14.1.1.4, 14.1.4, 15.1.4
Initial Decision
15.2
Initial Decision Maker, Definition of
1.1.8
Initial Decision Maker, Decisions
14.2.4, 15.1.4.2, 15.2.1, 15.2.2, 15.2.3, 15.2.4, 15.2.5
Initial Decision Maker, Extent of Authority
14.2.4, 15.1.4.2, 15.2.1, 15.2.2, 15.2.3, 15.2.4, 15.2.5
Injury or Damage to Person or Property
10.2.8, 10.4
Inspections
3.1.3, 3.3.3, 3.7.1, 4.2.2, 4.2.6, 4.2.9, 9.4.2, 9.8.3, 9.9.2, 9.10.1, 12.2.1, 13.4
Instructions to Bidders
1.1.1
Instructions to the Contractor
3.2.4, 3.3.1, 3.8.1, 5.2.1, 7, 8.2.2, 12, 13.4.2
Instruments of Service, Definition of
1.1.7
Insurance
6.1.1, 7.3.4, 8.2.2, 9.3.2, 9.8.4, 9.9.1, 9.10.2, 10.2.5, **11**
Insurance, Notice of Cancellation or Expiration
11.1.4, 11.2.3
Insurance, Contractor's Liability
11.1
Insurance, Effective Date of
8.2.2, 14.4.2
Insurance, Owner's Liability
11.2
Insurance, Property
10.2.5, 11.2, 11.4, 11.5
Insurance, Stored Materials
9.3.2
INSURANCE AND BONDS
11
Insurance Companies, Consent to Partial Occupancy
9.9.1
Insured loss, Adjustment and Settlement of
11.5
Intent of the Contract Documents
1.2.1, 4.2.7, 4.2.12, 4.2.13
Interest
13.5
Interpretation
1.1.8, 1.2.3, **1.4**, 4.1.1, 5.1, 6.1.2, 15.1.1
Interpretations, Written
4.2.11, 4.2.12
Judgment on Final Award
15.4.2
Labor and Materials, Equipment
1.1.3, 1.1.6, **3.4**, 3.5, 3.8.2, 3.8.3, 3.12, 3.13, 3.15.1, 5.2.1, 6.2.1, 7.3.4, 9.3.2, 9.3.3, 9.5.1.3, 9.10.2, 10.2.1, 10.2.4, 14.2.1.1, 14.2.1.2
Labor Disputes
8.3.1
Laws and Regulations
1.5, 2.3.2, 3.2.3, 3.2.4, 3.6, 3.7, 3.12.10, 3.13, 9.6.4, 9.9.1, 10.2.2, 13.1, 13.3.1, 13.4.2, 13.5, 14, 15.2.8, 15.4
Liens
2.1.2, 9.3.1, 9.3.3, 9.6.8, 9.10.2, 9.10.4, 15.2.8
Limitations, Statutes of
12.2.5, 15.1.2, 15.4.1.1
Limitations of Liability
3.2.2, 3.5, 3.12.10, 3.12.10.1, 3.17, 3.18.1, 4.2.6, 4.2.7, 6.2.2, 9.4.2, 9.6.4, 9.6.7, 9.6.8, 10.2.5, 10.3.3, 11.3, 12.2.5, 13.3.1
Limitations of Time
2.1.2, 2.2, 2.5, 3.2.2, 3.10, 3.11, 3.12.5, 3.15.1, 4.2.7, 5.2, 5.3, 5.4.1, 6.2.4, 7.3, 7.4, 8.2, 9.2, 9.3.1, 9.3.3, 9.4.1, 9.5, 9.6, 9.7, 9.8, 9.9, 9.10, 12.2, 13.4, 14, 15, 15.1.2, 15.1.3, 15.1.5
Materials, Hazardous
10.2.4, **10.3**
Materials, Labor, Equipment and
1.1.3, 1.1.6, 3.4.1, 3.5, 3.8.2, 3.8.3, 3.12, 3.13, 3.15.1, 5.2.1, 6.2.1, 7.3.4, 9.3.2, 9.3.3, 9.5.1.3, 9.10.2, 10.2.1.2, 10.2.4, 14.2.1.1, 14.2.1.2
Means, Methods, Techniques, Sequences and Procedures of Construction
3.3.1, 3.12.10, 4.2.2, 4.2.7, 9.4.2
Mechanic's Lien
2.1.2, 9.3.1, 9.3.3, 9.6.8, 9.10.2, 9.10.4, 15.2.8
Mediation
8.3.1, 15.1.3.2, 15.2.1, 15.2.5, 15.2.6, **15.3**, 15.4.1, 15.4.1.1
Minor Changes in the Work
1.1.1, 3.4.2, 3.12.8, 4.2.8, 7.1, **7.4**
MISCELLANEOUS PROVISIONS
13
Modifications, Definition of
1.1.1
Modifications to the Contract
1.1.1, 1.1.2, 2.5, 3.11, 4.1.2, 4.2.1, 5.2.3, 7, 8.3.1, 9.7, 10.3.2
Mutual Responsibility
6.2
Nonconforming Work, Acceptance of
9.6.6, 9.9.3, **12.3**
Nonconforming Work, Rejection and Correction of
2.4, 2.5, 3.5, 4.2.6, 6.2.4, 9.5.1, 9.8.2, 9.9.3, 9.10.4, 12.2
Notice
1.6, 1.6.1, 1.6.2, 2.1.2, 2.2.2., 2.2.3, 2.2.4, 2.5, 3.2.4, 3.3.1, 3.7.4, 3.7.5, 3.9.2, 3.12.9, 3.12.10, 5.2.1, 7.4, 8.2.2 9.6.8, 9.7, 9.10.1, 10.2.8, 10.3.2, 11.5, 12.2.2.1, 13.4.1, 13.4.2, 14.1, 14.2.2, 14.4.2, 15.1.3, 15.1.5, 15.1.6, 15.4.1
Notice of Cancellation or Expiration of Insurance
11.1.4, 11.2.3
Notice of Claims
1.6.2, 2.1.2, 3.7.4, 9.6.8, 10.2.8, **15.1.3**, 15.1.5, 15.1.6, 15.2.8, 15.3.2, 15.4.1
Notice of Testing and Inspections
13.4.1, 13.4.2
Observations, Contractor's

AIA Document A201 – 2017. Copyright © 1911, 1915, 1918, 1925, 1937, 1951, 1958, 1961, 1963, 1966, 1970, 1976, 1987, 1997, 2007 and 2017. All rights reserved. "The American Institute of Architects," "American Institute of Architects," "AIA," the AIA Logo, and "AIA Contract Documents" are trademarks of The American Institute of Architects. This document was produced at 20:31:18 EDT on 08/06/2026 under Subscription No.20250146710 which expires on 08/21/2026, is not for resale, is licensed for one-time use only, and may only be used in accordance with the AIA Contract Documents® Terms of Service. To report copyright violations, e-mail docinfo@aiacontracts.com.
User Notes: (6a74eee42a65beba85b6bb3c)

3.2, 3.7.4
Occupancy
2.3.1, 9.6.6, 9.8
Orders, Written
1.1.1, 2.4, 3.9.2, 7, 8.2.2, 11.5, 12.1, 12.2.2.1, 13.4.2, 14.3.1
OWNER
2
Owner, Definition of
2.1.1
Owner, Evidence of Financial Arrangements
2.2, 13.2.2, 14.1.1.4
Owner, Information and Services Required of the
2.1.2, **2.2**, 2.3, 3.2.2, 3.12.10, 6.1.3, 6.1.4, 6.2.5, 9.3.2, 9.6.1, 9.6.4, 9.9.2, 9.10.3, 10.3.3, 11.2, 13.4.1, 13.4.2, 14.1.1.4, 14.1.4, 15.1.4
Owner's Authority
1.5, 2.1.1, 2.3.32.4, 2.5, 3.4.2, 3.8.1, 3.12.10, 3.14.2, 4.1.2, 4.2.4, 4.2.9, 5.2.1, 5.2.4, 5.4.1, 6.1, 6.3, 7.2.1, 7.3.1, 8.2.2, 8.3.1, 9.3.2, 9.5.1, 9.6.4, 9.9.1, 9.10.2, 10.3.2, 11.4, 11.5, 12.2.2, 12.3, 13.2.2, 14.3, 14.4, 15.2.7
Owner's Insurance
11.2
Owner's Relationship with Subcontractors
1.1.2, 5.2, 5.3, 5.4, 9.6.4, 9.10.2, 14.2.2
Owner's Right to Carry Out the Work
2.5, 14.2.2
Owner's Right to Clean Up
6.3
Owner's Right to Perform Construction and to Award Separate Contracts
6.1
Owner's Right to Stop the Work
2.4
Owner's Right to Suspend the Work
14.3
Owner's Right to Terminate the Contract
14.2, 14.4
Ownership and Use of Drawings, Specifications and Other Instruments of Service
1.1.1, 1.1.6, 1.1.7, **1.5**, 2.3.6, 3.2.2, 3.11, 3.17, 4.2.12, 5.3
Partial Occupancy or Use
9.6.6, **9.9**
Patching, Cutting and
3.14, 6.2.5
Patents
3.17
Payment, Applications for
4.2.5, 7.3.9, 9.2, **9.3**, 9.4, 9.5, 9.6.3, 9.7, 9.8.5, 9.10.1, 14.2.3, 14.2.4, 14.4.3
Payment, Certificates for
4.2.5, 4.2.9, 9.3.3, **9.4**, 9.5, 9.6.1, 9.6.6, 9.7, 9.10.1, 9.10.3, 14.1.1.3, 14.2.4
Payment, Failure of
9.5.1.3, **9.7**, 9.10.2, 13.5, 14.1.1.3, 14.2.1.2
Payment, Final
4.2.1, 4.2.9, **9.10**, 12.3, 14.2.4, 14.4.3
Payment Bond, Performance Bond and
7.3.4.4, 9.6.7, 9.10.3, **11.1.2**
Payments, Progress
9.3, **9.6**, 9.8.5, 9.10.3, 14.2.3, 15.1.4
PAYMENTS AND COMPLETION
9
Payments to Subcontractors
5.4.2, 9.5.1.3, 9.6.2, 9.6.3, 9.6.4, 9.6.7, 14.2.1.2
PCB
10.3.1
Performance Bond and Payment Bond
7.3.4.4, 9.6.7, 9.10.3, **11.1.2**
Permits, Fees, Notices and Compliance with Laws
2.3.1, **3.7**, 3.13, 7.3.4.4, 10.2.2
PERSONS AND PROPERTY, PROTECTION OF
10
Polychlorinated Biphenyl
10.3.1
Product Data, Definition of
3.12.2
Product Data and Samples, Shop Drawings
3.11, **3.12**, 4.2.7
Progress and Completion
4.2.2, **8.2**, 9.8, 9.9.1, 14.1.4, 15.1.4
Progress Payments
9.3, **9.6**, 9.8.5, 9.10.3, 14.2.3, 15.1.4
Project, Definition of
1.1.4
Project Representatives
4.2.10
Property Insurance
10.2.5, **11.2**
Proposal Requirements
1.1.1
PROTECTION OF PERSONS AND PROPERTY
10
Regulations and Laws
1.5, 2.3.2, 3.2.3, 3.6, 3.7, 3.12.10, 3.13, 9.6.4, 9.9.1, 10.2.2, 13.1, 13.3, 13.4.1, 13.4.2, 13.5, 14, 15.2.8, 15.4
Rejection of Work
4.2.6, 12.2.1
Releases and Waivers of Liens
9.3.1, 9.10.2
Representations
3.2.1, 3.5, 3.12.6, 8.2.1, 9.3.3, 9.4.2, 9.5.1, 9.10.1
Representatives
2.1.1, 3.1.1, 3.9, 4.1.1, 4.2.10, 13.2.1
Responsibility for Those Performing the Work
3.3.2, 3.18, 4.2.2, 4.2.3, 5.3, 6.1.3, 6.2, 6.3, 9.5.1, 10
Retainage
9.3.1, 9.6.2, 9.8.5, 9.9.1, 9.10.2, 9.10.3
Review of Contract Documents and Field Conditions by Contractor
3.2, 3.12.7, 6.1.3
Review of Contractor's Submittals by Owner and Architect
3.10.1, 3.10.2, 3.11, 3.12, 4.2, 5.2, 6.1.3, 9.2, 9.8.2
Review of Shop Drawings, Product Data and Samples by Contractor

AIA Document A201 – 2017. Copyright © 1911, 1915, 1918, 1925, 1937, 1951, 1958, 1961, 1963, 1966, 1970, 1976, 1987, 1997, 2007 and 2017. All rights reserved. "The American Institute of Architects," "American Institute of Architects," "AIA," the AIA Logo, and "AIA Contract Documents" are trademarks of The American Institute of Architects. This document was produced at 20:31:18 EDT on 08/06/2026 under Subscription No.20250146710 which expires on 08/21/2026, is not for resale, is licensed for one-time use only, and may only be used in accordance with the AIA Contract Documents® Terms of Service. To report copyright violations, e-mail docinfo@aiacontracts.com.
User Notes: (6a74eee42a65beba85b6bb3c)

3.12
Rights and Remedies
1.1.2, 2.4, 2.5, 3.5, 3.7.4, 3.15.2, 4.2.6, 5.3, 5.4, 6.1, 6.3, 7.3.1, 8.3, 9.5.1, 9.7, 10.2.5, 10.3, 12.2.1, 12.2.2, 12.2.4, **13.3**, 14, 15.4
Royalties, Patents and Copyrights
3.17
Rules and Notices for Arbitration
15.4.1
Safety of Persons and Property
10.2, 10.4
Safety Precautions and Programs
3.3.1, 4.2.2, 4.2.7, 5.3, **10.1**, 10.2, 10.4
Samples, Definition of
3.12.3
Samples, Shop Drawings, Product Data and
3.11, **3.12**, 4.2.7
Samples at the Site, Documents and
3.11
Schedule of Values
9.2, 9.3.1
Schedules, Construction
3.10, 3.12.1, 3.12.2, 6.1.3, 15.1.6.2
Separate Contracts and Contractors
1.1.4, 3.12.5, 3.14.2, 4.2.4, 4.2.7, 6, 8.3.1, 12.1.2
Separate Contractors, Definition of
6.1.1
Shop Drawings, Definition of
3.12.1
Shop Drawings, Product Data and Samples
3.11, **3.12**, 4.2.7
Site, Use of
3.13, 6.1.1, 6.2.1
Site Inspections
3.2.2, 3.3.3, 3.7.1, 3.7.4, 4.2, 9.9.2, 9.4.2, 9.10.1, 13.4
Site Visits, Architect's
3.7.4, 4.2.2, 4.2.9, 9.4.2, 9.5.1, 9.9.2, 9.10.1, 13.4
Special Inspections and Testing
4.2.6, 12.2.1, 13.4
Specifications, Definition of
1.1.6
Specifications
1.1.1, **1.1.6**, 1.2.2, 1.5, 3.12.10, 3.17, 4.2.14
Statute of Limitations
15.1.2, 15.4.1.1
Stopping the Work
2.2.2, 2.4, 9.7, 10.3, 14.1
Stored Materials
6.2.1, 9.3.2, 10.2.1.2, 10.2.4
Subcontractor, Definition of
5.1.1
SUBCONTRACTORS
5
Subcontractors, Work by
1.2.2, 3.3.2, 3.12.1, 3.18, 4.2.3, 5.2.3, 5.3, 5.4, 9.3.1.2, 9.6.7
Subcontractual Relations
5.3, 5.4, 9.3.1.2, 9.6, 9.10, 10.2.1, 14.1, 14.2.1
Submittals
3.10, 3.11, 3.12, 4.2.7, 5.2.1, 5.2.3, 7.3.4, 9.2, 9.3, 9.8, 9.9.1, 9.10.2, 9.10.3
Submittal Schedule
3.10.2, 3.12.5, 4.2.7
Subrogation, Waivers of
6.1.1, **11.3**
Substances, Hazardous
10.3
Substantial Completion
4.2.9, 8.1.1, 8.1.3, 8.2.3, 9.4.2, **9.8**, 9.9.1, 9.10.3, 12.2, 15.1.2
Substantial Completion, Definition of
9.8.1
Substitution of Subcontractors
5.2.3, 5.2.4
Substitution of Architect
2.3.3
Substitutions of Materials
3.4.2, 3.5, 7.3.8
Sub-subcontractor, Definition of
5.1.2
Subsurface Conditions
3.7.4
Successors and Assigns
13.2
Superintendent
3.9, 10.2.6
Supervision and Construction Procedures
1.2.2, **3.3**, 3.4, 3.12.10, 4.2.2, 4.2.7, 6.1.3, 6.2.4, 7.1.3, 7.3.4, 8.2, 8.3.1, 9.4.2, 10, 12, 14, 15.1.4
Suppliers
1.5, 3.12.1, 4.2.4, 4.2.6, 5.2.1, 9.3, 9.4.2, 9.5.4, 9.6, 9.10.5, 14.2.1
Surety
5.4.1.2, 9.6.8, 9.8.5, 9.10.2, 9.10.3, 11.1.2, 14.2.2, 15.2.7
Surety, Consent of
9.8.5, 9.10.2, 9.10.3
Surveys
1.1.7, 2.3.4
Suspension by the Owner for Convenience
14.3
Suspension of the Work
3.7.5, 5.4.2, 14.3
Suspension or Termination of the Contract
5.4.1.1, 14
Taxes
3.6, 3.8.2.1, 7.3.4.4
Termination by the Contractor
14.1, 15.1.7
Termination by the Owner for Cause
5.4.1.1, **14.2,** 15.1.7
Termination by the Owner for Convenience
14.4
Termination of the Architect
2.3.3
Termination of the Contractor Employment
14.2.2

AIA Document A201 – 2017. Copyright © 1911, 1915, 1918, 1925, 1937, 1951, 1958, 1961, 1963, 1966, 1970, 1976, 1987, 1997, 2007 and 2017. All rights reserved. "The American Institute of Architects," "American Institute of Architects," "AIA," the AIA Logo, and "AIA Contract Documents" are trademarks of The American Institute of Architects. This document was produced at 20:31:18 EDT on 08/06/2026 under Subscription No.20250146710 which expires on 08/21/2026, is not for resale, is licensed for one-time use only, and may only be used in accordance with the AIA Contract Documents® Terms of Service. To report copyright violations, e-mail docinfo@aiacontracts.com.
User Notes: (6a74eee42a65beba85b6bb3c)

TERMINATION OR SUSPENSION OF THE CONTRACT
14
Tests and Inspections
3.1.3, 3.3.3, 3.7.1, 4.2.2, 4.2.6, 4.2.9, 9.4.2, 9.8.3, 9.9.2, 9.10.1, 10.3.2, 12.2.1, **13.4**
TIME
8
Time, Delays and Extensions of
3.2.4, 3.7.4, 5.2.3, 7.2.1, 7.3.1, 7.4, **8.3**, 9.5.1, 9.7, 10.3.2, 10.4, 14.3.2, 15.1.6, 15.2.5
Time Limits
2.1.2, 2.2, 2.5, 3.2.2, 3.10, 3.11, 3.12.5, 3.15.1, 4.2, 5.2, 5.3, 5.4, 6.2.4, 7.3, 7.4, 8.2, 9.2, 9.3.1, 9.3.3, 9.4.1, 9.5, 9.6, 9.7, 9.8, 9.9, 9.10, 12.2, 13.4, 14, 15.1.2, 15.1.3, 15.4
Time Limits on Claims
3.7.4, 10.2.8, 15.1.2, 15.1.3
Title to Work
9.3.2, 9.3.3
UNCOVERING AND CORRECTION OF WORK
12
Uncovering of Work
12.1
Unforeseen Conditions, Concealed or Unknown
3.7.4, 8.3.1, 10.3
Unit Prices
7.3.3.2, 9.1.2
Use of Documents
1.1.1, 1.5, 2.3.6, 3.12.6, 5.3
Use of Site
3.13, 6.1.1, 6.2.1
Values, Schedule of
9.2, 9.3.1
Waiver of Claims by the Architect
13.3.2
Waiver of Claims by the Contractor
9.10.5, 13.3.2, **15.1.7**
Waiver of Claims by the Owner
9.9.3, 9.10.3, 9.10.4, 12.2.2.1, 13.3.2, 14.2.4, **15.1.7**
Waiver of Consequential Damages
14.2.4, 15.1.7
Waiver of Liens
9.3, 9.10.2, 9.10.4
Waivers of Subrogation
6.1.1, **11.3**
Warranty
3.5, 4.2.9, 9.3.3, 9.8.4, 9.9.1, 9.10.2, 9.10.4, 12.2.2, 15.1.2
Weather Delays
8.3, 15.1.6.2
Work, Definition of
1.1.3
Written Consent
1.5.2, 3.4.2, 3.7.4, 3.12.8, 3.14.2, 4.1.2, 9.3.2, 9.10.3, 13.2, 13.3.2, 15.4.4.2
Written Interpretations
4.2.11, 4.2.12
Written Orders
1.1.1, 2.4, 3.9, 7, 8.2.2, 12.1, 12.2, 13.4.2, 14.3.1

AIA Document A201 – 2017. Copyright © 1911, 1915, 1918, 1925, 1937, 1951, 1958, 1961, 1963, 1966, 1970, 1976, 1987, 1997, 2007 and 2017. All rights reserved. "The American Institute of Architects," "American Institute of Architects," "AIA," the AIA Logo, and "AIA Contract Documents" are trademarks of The American Institute of Architects. This document was produced at 20:31:18 EDT on 08/06/2026 under Subscription No.20250146710 which expires on 08/21/2026, is not for resale, is licensed for one-time use only, and may only be used in accordance with the AIA Contract Documents® Terms of Service. To report copyright violations, e-mail docinfo@aiacontracts.com.
User Notes: (6a74eee42a65beba85b6bb3c)

ARTICLE 1 GENERAL PROVISIONS

§ 1.1 Basic Definitions

§ 1.1.1 The Contract Documents

The Contract Documents are enumerated in the Agreement between the Owner and Contractor (hereinafter the Agreement) and consist of the Agreement, Conditions of the Contract (General, Supplementary and other Conditions), Drawings, Specifications, Addenda issued prior to execution of the Contract, other documents listed in the Agreement, and Modifications issued after execution of the Contract. A Modification is (1) a written amendment to the Contract signed by both parties, (2) a Change Order, (3) a Construction Change Directive, or (4) a written order for a minor change in the Work issued by the Architect. Unless specifically enumerated in the Agreement, the Contract Documents do not include the advertisement or invitation to bid, Instructions to Bidders, sample forms, other information furnished by the Owner in anticipation of receiving bids or proposals, the Contractor's bid or proposal, or portions of Addenda relating to bidding or proposal requirements.

§ 1.1.2 The Contract

The Contract Documents form the Contract for Construction. The Contract represents the entire and integrated agreement between the parties hereto and supersedes prior negotiations, representations, or agreements, either written or oral. The Contract may be amended or modified only by a Modification. The Contract Documents shall not be construed to create a contractual relationship of any kind (1) between the Contractor and the Architect or the Architect's consultants, (2) between the Owner and a Subcontractor or a Sub-subcontractor, (3) between the Owner and the Architect or the Architect's consultants, or (4) between any persons or entities other than the Owner and the Contractor. The Architect shall, however, be entitled to performance and enforcement of obligations under the Contract intended to facilitate performance of the Architect's duties.

§ 1.1.3 The Work

The term "Work" means the construction and services required by the Contract Documents, whether completed or partially completed, and includes all other labor, materials, equipment, and services provided or to be provided by the Contractor to fulfill the Contractor's obligations. The Work may constitute the whole or a part of the Project.

§ 1.1.4 The Project

The Project is the total construction of which the Work performed under the Contract Documents may be the whole or a part and which may include construction by the Owner and by Separate Contractors.

§ 1.1.5 The Drawings

The Drawings are the graphic and pictorial portions of the Contract Documents showing the design, location and dimensions of the Work, generally including plans, elevations, sections, details, schedules, and diagrams.

§ 1.1.6 The Specifications

The Specifications are that portion of the Contract Documents consisting of the written requirements for materials, equipment, systems, standards and workmanship for the Work, and performance of related services.

§ 1.1.7 Instruments of Service

Instruments of Service are representations, in any medium of expression now known or later developed, of the tangible and intangible creative work performed by the Architect and the Architect's consultants under their respective professional services agreements. Instruments of Service may include, without limitation, studies, surveys, models, sketches, drawings, specifications, and other similar materials.

§ 1.1.8 Initial Decision Maker

The Initial Decision Maker is the person identified in the Agreement to render initial decisions on Claims in accordance with Section 15.2. The Initial Decision Maker shall not show partiality to the Owner or Contractor and shall not be liable for results of interpretations or decisions rendered in good faith.

§ 1.2 Correlation and Intent of the Contract Documents

§ 1.2.1 The intent of the Contract Documents is to include all items necessary for the proper execution and completion of the Work by the Contractor. The Contract Documents are complementary, and what is required by one shall be as binding as if required by all; performance by the Contractor shall be required only to the extent consistent with the Contract Documents and reasonably inferable from them as being necessary to produce the indicated results.

AIA Document A201 – 2017. Copyright © 1911, 1915, 1918, 1925, 1937, 1951, 1958, 1961, 1963, 1966, 1970, 1976, 1987, 1997, 2007 and 2017. All rights reserved. "The American Institute of Architects," "American Institute of Architects," "AIA," the AIA Logo, and "AIA Contract Documents" are trademarks of The American Institute of Architects. This document was produced at 20:31:18 EDT on 08/06/2026 under Subscription No.20250146710 which expires on 08/21/2026, is not for resale, is licensed for one-time use only, and may only be used in accordance with the AIA Contract Documents® Terms of Service. To report copyright violations, e-mail docinfo@aiacontracts.com.
User Notes: (6a74eee42a65beba85b6bb3c)

§ 1.2.1.1 The invalidity of any provision of the Contract Documents shall not invalidate the Contract or its remaining provisions. If it is determined that any provision of the Contract Documents violates any law, or is otherwise invalid or unenforceable, then that provision shall be revised to the extent necessary to make that provision legal and enforceable. In such case the Contract Documents shall be construed, to the fullest extent permitted by law, to give effect to the parties' intentions and purposes in executing the Contract.

§ 1.2.2 Organization of the Specifications into divisions, sections and articles, and arrangement of Drawings shall not control the Contractor in dividing the Work among Subcontractors or in establishing the extent of Work to be performed by any trade.

§ 1.2.3 Unless otherwise stated in the Contract Documents, words that have well-known technical or construction industry meanings are used in the Contract Documents in accordance with such recognized meanings.

§ 1.3 Capitalization

Terms capitalized in these General Conditions include those that are (1) specifically defined, (2) the titles of numbered articles, or (3) the titles of other documents published by the American Institute of Architects.

§ 1.4 Interpretation

In the interest of brevity the Contract Documents frequently omit modifying words such as "all" and "any" and articles such as "the" and "an," but the fact that a modifier or an article is absent from one statement and appears in another is not intended to affect the interpretation of either statement.

§ 1.5 Ownership and Use of Drawings, Specifications, and Other Instruments of Service

§ 1.5.1 The Architect and the Architect's consultants shall be deemed the authors and owners of their respective Instruments of Service, including the Drawings and Specifications, and retain all common law, statutory, and other reserved rights in their Instruments of Service, including copyrights. The Contractor, Subcontractors, Sub-subcontractors, and suppliers shall not own or claim a copyright in the Instruments of Service. Submittal or distribution to meet official regulatory requirements or for other purposes in connection with the Project is not to be construed as publication in derogation of the Architect's or Architect's consultants' reserved rights.

§ 1.5.2 The Contractor, Subcontractors, Sub-subcontractors, and suppliers are authorized to use and reproduce the Instruments of Service provided to them, subject to any protocols established pursuant to Sections 1.7 and 1.8, solely and exclusively for execution of the Work. All copies made under this authorization shall bear the copyright notice, if any, shown on the Instruments of Service. The Contractor, Subcontractors, Sub-subcontractors, and suppliers may not use the Instruments of Service on other projects or for additions to the Project outside the scope of the Work without the specific written consent of the Owner, Architect, and the Architect's consultants.

§ 1.6 Notice

§ 1.6.1 Except as otherwise provided in Section 1.6.2, where the Contract Documents require one party to notify or give notice to the other party, such notice shall be provided in writing to the designated representative of the party to whom the notice is addressed and shall be deemed to have been duly served if delivered in person, by mail, by courier, or by electronic transmission if a method for electronic transmission is set forth in the Agreement.

§ 1.6.2 Notice of Claims as provided in Section 15.1.3 shall be provided in writing and shall be deemed to have been duly served only if delivered to the designated representative of the party to whom the notice is addressed by certified or registered mail, or by courier providing proof of delivery.

§ 1.7 Digital Data Use and Transmission

The parties shall agree upon written protocols governing the transmission and use of, and reliance on, Instruments of Service or any other information or documentation in digital form.

§ 1.8 Building Information Models Use and Reliance

Any use of, or reliance on, all or a portion of a building information model without agreement to written protocols governing the use of, and reliance on, the information contained in the model shall be at the using or relying party's sole risk and without liability to the other party and its contractors or consultants, the authors of, or contributors to, the building information model, and each of their agents and employees.

AIA Document A201 – 2017. Copyright © 1911, 1915, 1918, 1925, 1937, 1951, 1958, 1961, 1963, 1966, 1970, 1976, 1987, 1997, 2007 and 2017. All rights reserved. "The American Institute of Architects," "American Institute of Architects," "AIA," the AIA Logo, and "AIA Contract Documents" are trademarks of The American Institute of Architects. This document was produced at 20:31:18 EDT on 08/06/2026 under Subscription No.20250146710 which expires on 08/21/2026, is not for resale, is licensed for one-time use only, and may only be used in accordance with the AIA Contract Documents® Terms of Service. To report copyright violations, e-mail docinfo@aiacontracts.com.
User Notes: (6a74eee42a65beba85b6bb3c)

ARTICLE 2 OWNER

§ 2.1 General

§ 2.1.1 The Owner is the person or entity identified as such in the Agreement and is referred to throughout the Contract Documents as if singular in number. The Owner shall designate in writing a representative who shall have express authority to bind the Owner with respect to all matters requiring the Owner's approval or authorization. Except as otherwise provided in Section 4.2.1, the Architect does not have such authority. The term "Owner" means the Owner or the Owner's authorized representative.

§ 2.1.2 The Owner shall furnish to the Contractor, within fifteen days after receipt of a written request, information necessary and relevant for the Contractor to evaluate, give notice of, or enforce mechanic's lien rights. Such information shall include a correct statement of the record legal title to the property on which the Project is located, usually referred to as the site, and the Owner's interest therein.

§ 2.2 Evidence of the Owner's Financial Arrangements

§ 2.2.1 Prior to commencement of the Work and upon written request by the Contractor, the Owner shall furnish to the Contractor reasonable evidence that the Owner has made financial arrangements to fulfill the Owner's obligations under the Contract. The Contractor shall have no obligation to commence the Work until the Owner provides such evidence. If commencement of the Work is delayed under this Section 2.2.1, the Contract Time shall be extended appropriately.

§ 2.2.2 Following commencement of the Work and upon written request by the Contractor, the Owner shall furnish to the Contractor reasonable evidence that the Owner has made financial arrangements to fulfill the Owner's obligations under the Contract only if (1) the Owner fails to make payments to the Contractor as the Contract Documents require; (2) the Contractor identifies in writing a reasonable concern regarding the Owner's ability to make payment when due; or (3) a change in the Work materially changes the Contract Sum. If the Owner fails to provide such evidence, as required, within fourteen days of the Contractor's request, the Contractor may immediately stop the Work and, in that event, shall notify the Owner that the Work has stopped. However, if the request is made because a change in the Work materially changes the Contract Sum under (3) above, the Contractor may immediately stop only that portion of the Work affected by the change until reasonable evidence is provided. If the Work is stopped under this Section 2.2.2, the Contract Time shall be extended appropriately and the Contract Sum shall be increased by the amount of the Contractor's reasonable costs of shutdown, delay and start-up, plus interest as provided in the Contract Documents.

§ 2.2.3 After the Owner furnishes evidence of financial arrangements under this Section 2.2, the Owner shall not materially vary such financial arrangements without prior notice to the Contractor.

§ 2.2.4 Where the Owner has designated information furnished under this Section 2.2 as "confidential," the Contractor shall keep the information confidential and shall not disclose it to any other person. However, the Contractor may disclose "confidential" information, after seven (7) days' notice to the Owner, where disclosure is required by law, including a subpoena or other form of compulsory legal process issued by a court or governmental entity, or by court or arbitrator(s) order. The Contractor may also disclose "confidential" information to its employees, consultants, sureties, Subcontractors and their employees, Sub-subcontractors, and others who need to know the content of such information solely and exclusively for the Project and who agree to maintain the confidentiality of such information.

§ 2.3 Information and Services Required of the Owner

§ 2.3.1 Except for permits and fees that are the responsibility of the Contractor under the Contract Documents, including those required under Section 3.7.1, the Owner shall secure and pay for necessary approvals, easements, assessments and charges required for construction, use or occupancy of permanent structures or for permanent changes in existing facilities.

§ 2.3.2 The Owner shall retain an architect lawfully licensed to practice architecture, or an entity lawfully practicing architecture, in the jurisdiction where the Project is located. That person or entity is identified as the Architect in the Agreement and is referred to throughout the Contract Documents as if singular in number.

§ 2.3.3 If the employment of the Architect terminates, the Owner shall employ a successor to whom the Contractor has no reasonable objection and whose status under the Contract Documents shall be that of the Architect.

AIA Document A201 – 2017. Copyright © 1911, 1915, 1918, 1925, 1937, 1951, 1958, 1961, 1963, 1966, 1970, 1976, 1987, 1997, 2007 and 2017. All rights reserved. "The American Institute of Architects," "American Institute of Architects," "AIA," the AIA Logo, and "AIA Contract Documents" are trademarks of The American Institute of Architects. This document was produced at 20:31:18 EDT on 08/06/2026 under Subscription No.20250146710 which expires on 08/21/2026, is not for resale, is licensed for one-time use only, and may only be used in accordance with the AIA Contract Documents® Terms of Service. To report copyright violations, e-mail docinfo@aiacontracts.com.
User Notes: (6a74eee42a65beba85b6bb3c)

§ 2.3.4 The Owner shall furnish surveys describing physical characteristics, legal limitations and utility locations for the site of the Project, and a legal description of the site. The Contractor shall be entitled to rely on the accuracy of information furnished by the Owner but shall exercise proper precautions relating to the safe performance of the Work.

§ 2.3.5 The Owner shall furnish information or services required of the Owner by the Contract Documents with reasonable promptness. The Owner shall also furnish any other information or services under the Owner's control and relevant to the Contractor's performance of the Work with reasonable promptness after receiving the Contractor's written request for such information or services.

§ 2.3.6 Unless otherwise provided in the Contract Documents, the Owner shall furnish to the Contractor one copy of the Contract Documents for purposes of making reproductions pursuant to Section 1.5.2.

§ 2.4 Owner's Right to Stop the Work

If the Contractor fails to correct Work that is not in accordance with the requirements of the Contract Documents as required by Section 12.2 or repeatedly fails to carry out Work in accordance with the Contract Documents, the Owner may issue a written order to the Contractor to stop the Work, or any portion thereof, until the cause for such order has been eliminated; however, the right of the Owner to stop the Work shall not give rise to a duty on the part of the Owner to exercise this right for the benefit of the Contractor or any other person or entity, except to the extent required by Section 6.1.3.

§ 2.5 Owner's Right to Carry Out the Work

If the Contractor defaults or neglects to carry out the Work in accordance with the Contract Documents and fails within a ten-day period after receipt of notice from the Owner to commence and continue correction of such default or neglect with diligence and promptness, the Owner may, without prejudice to other remedies the Owner may have, correct such default or neglect. Such action by the Owner and amounts charged to the Contractor are both subject to prior approval of the Architect and the Architect may, pursuant to Section 9.5.1, withhold or nullify a Certificate for Payment in whole or in part, to the extent reasonably necessary to reimburse the Owner for the reasonable cost of correcting such deficiencies, including Owner's expenses and compensation for the Architect's additional services made necessary by such default, neglect, or failure. If current and future payments are not sufficient to cover such amounts, the Contractor shall pay the difference to the Owner. If the Contractor disagrees with the actions of the Owner or the Architect, or the amounts claimed as costs to the Owner, the Contractor may file a Claim pursuant to Article 15.

ARTICLE 3 CONTRACTOR

§ 3.1 General

§ 3.1.1 The Contractor is the person or entity identified as such in the Agreement and is referred to throughout the Contract Documents as if singular in number. The Contractor shall be lawfully licensed, if required in the jurisdiction where the Project is located. The Contractor shall designate in writing a representative who shall have express authority to bind the Contractor with respect to all matters under this Contract. The term "Contractor" means the Contractor or the Contractor's authorized representative.

§ 3.1.2 The Contractor shall perform the Work in accordance with the Contract Documents.

§ 3.1.3 The Contractor shall not be relieved of its obligations to perform the Work in accordance with the Contract Documents either by activities or duties of the Architect in the Architect's administration of the Contract, or by tests, inspections or approvals required or performed by persons or entities other than the Contractor.

§ 3.2 Review of Contract Documents and Field Conditions by Contractor

§ 3.2.1 Execution of the Contract by the Contractor is a representation that the Contractor has visited the site, become generally familiar with local conditions under which the Work is to be performed, and correlated personal observations with requirements of the Contract Documents.

§ 3.2.2 Because the Contract Documents are complementary, the Contractor shall, before starting each portion of the Work, carefully study and compare the various Contract Documents relative to that portion of the Work, as well as the information furnished by the Owner pursuant to Section 2.3.4, shall take field measurements of any existing conditions related to that portion of the Work, and shall observe any conditions at the site affecting it. These obligations are for the purpose of facilitating coordination and construction by the Contractor and are not for the

AIA Document A201 – 2017. Copyright © 1911, 1915, 1918, 1925, 1937, 1951, 1958, 1961, 1963, 1966, 1970, 1976, 1987, 1997, 2007 and 2017. All rights reserved. "The American Institute of Architects," "American Institute of Architects," "AIA," the AIA Logo, and "AIA Contract Documents" are trademarks of The American Institute of Architects. This document was produced at 20:31:18 EDT on 08/06/2026 under Subscription No.20250146710 which expires on 08/21/2026, is not for resale, is licensed for one-time use only, and may only be used in accordance with the AIA Contract Documents® Terms of Service. To report copyright violations, e-mail docinfo@aiacontracts.com.
User Notes: (6a74eee42a65beba85b6bb3c)

purpose of discovering errors, omissions, or inconsistencies in the Contract Documents; however, the Contractor shall promptly report to the Architect any errors, inconsistencies or omissions discovered by or made known to the Contractor as a request for information in such form as the Architect may require. It is recognized that the Contractor's review is made in the Contractor's capacity as a contractor and not as a licensed design professional, unless otherwise specifically provided in the Contract Documents.

§ 3.2.3 The Contractor is not required to ascertain that the Contract Documents are in accordance with applicable laws, statutes, ordinances, codes, rules and regulations, or lawful orders of public authorities, but the Contractor shall promptly report to the Architect any nonconformity discovered by or made known to the Contractor as a request for information in such form as the Architect may require.

§ 3.2.4 If the Contractor believes that additional cost or time is involved because of clarifications or instructions the Architect issues in response to the Contractor's notices or requests for information pursuant to Sections 3.2.2 or 3.2.3, the Contractor shall submit Claims as provided in Article 15. If the Contractor fails to perform the obligations of Sections 3.2.2 or 3.2.3, the Contractor shall pay such costs and damages to the Owner, subject to Section 15.1.7, as would have been avoided if the Contractor had performed such obligations. If the Contractor performs those obligations, the Contractor shall not be liable to the Owner or Architect for damages resulting from errors, inconsistencies or omissions in the Contract Documents, for differences between field measurements or conditions and the Contract Documents, or for nonconformities of the Contract Documents to applicable laws, statutes, ordinances, codes, rules and regulations, and lawful orders of public authorities.

§ 3.3 Supervision and Construction Procedures

§ 3.3.1 The Contractor shall supervise and direct the Work, using the Contractor's best skill and attention. The Contractor shall be solely responsible for, and have control over, construction means, methods, techniques, sequences, and procedures, and for coordinating all portions of the Work under the Contract. If the Contract Documents give specific instructions concerning construction means, methods, techniques, sequences, or procedures, the Contractor shall evaluate the jobsite safety thereof and shall be solely responsible for the jobsite safety of such means, methods, techniques, sequences, or procedures. If the Contractor determines that such means, methods, techniques, sequences or procedures may not be safe, the Contractor shall give timely notice to the Owner and Architect, and shall propose alternative means, methods, techniques, sequences, or procedures. The Architect shall evaluate the proposed alternative solely for conformance with the design intent for the completed construction. Unless the Architect objects to the Contractor's proposed alternative, the Contractor shall perform the Work using its alternative means, methods, techniques, sequences, or procedures.

§ 3.3.2 The Contractor shall be responsible to the Owner for acts and omissions of the Contractor's employees, Subcontractors and their agents and employees, and other persons or entities performing portions of the Work for, or on behalf of, the Contractor or any of its Subcontractors.

§ 3.3.3 The Contractor shall be responsible for inspection of portions of Work already performed to determine that such portions are in proper condition to receive subsequent Work.

§ 3.4 Labor and Materials

§ 3.4.1 Unless otherwise provided in the Contract Documents, the Contractor shall provide and pay for labor, materials, equipment, tools, construction equipment and machinery, water, heat, utilities, transportation, and other facilities and services necessary for proper execution and completion of the Work, whether temporary or permanent and whether or not incorporated or to be incorporated in the Work.

§ 3.4.2 Except in the case of minor changes in the Work approved by the Architect in accordance with Section 3.12.8 or ordered by the Architect in accordance with Section 7.4, the Contractor may make substitutions only with the consent of the Owner, after evaluation by the Architect and in accordance with a Change Order or Construction Change Directive.

§ 3.4.3 The Contractor shall enforce strict discipline and good order among the Contractor's employees and other persons carrying out the Work. The Contractor shall not permit employment of unfit persons or persons not properly skilled in tasks assigned to them.

AIA Document A201 – 2017. Copyright © 1911, 1915, 1918, 1925, 1937, 1951, 1958, 1961, 1963, 1966, 1970, 1976, 1987, 1997, 2007 and 2017. All rights reserved. "The American Institute of Architects," "American Institute of Architects," "AIA," the AIA Logo, and "AIA Contract Documents" are trademarks of The American Institute of Architects. This document was produced at 20:31:18 EDT on 08/06/2026 under Subscription No.20250146710 which expires on 08/21/2026, is not for resale, is licensed for one-time use only, and may only be used in accordance with the AIA Contract Documents® Terms of Service. To report copyright violations, e-mail docinfo@aiacontracts.com.
User Notes: (6a74eee42a65beba85b6bb3c)

§ 3.5 Warranty

§ 3.5.1 The Contractor warrants to the Owner and Architect that materials and equipment furnished under the Contract will be of good quality and new unless the Contract Documents require or permit otherwise. The Contractor further warrants that the Work will conform to the requirements of the Contract Documents and will be free from defects, except for those inherent in the quality of the Work the Contract Documents require or permit. Work, materials, or equipment not conforming to these requirements may be considered defective. The Contractor's warranty excludes remedy for damage or defect caused by abuse, alterations to the Work not executed by the Contractor, improper or insufficient maintenance, improper operation, or normal wear and tear and normal usage. If required by the Architect, the Contractor shall furnish satisfactory evidence as to the kind and quality of materials and equipment.

§ 3.5.2 All material, equipment, or other special warranties required by the Contract Documents shall be issued in the name of the Owner, or shall be transferable to the Owner, and shall commence in accordance with Section 9.8.4.

§ 3.6 Taxes

The Contractor shall pay sales, consumer, use and similar taxes for the Work provided by the Contractor that are legally enacted when bids are received or negotiations concluded, whether or not yet effective or merely scheduled to go into effect.

§ 3.7 Permits, Fees, Notices and Compliance with Laws

§ 3.7.1 Unless otherwise provided in the Contract Documents, the Contractor shall secure and pay for the building permit as well as for other permits, fees, licenses, and inspections by government agencies necessary for proper execution and completion of the Work that are customarily secured after execution of the Contract and legally required at the time bids are received or negotiations concluded.

§ 3.7.2 The Contractor shall comply with and give notices required by applicable laws, statutes, ordinances, codes, rules and regulations, and lawful orders of public authorities applicable to performance of the Work.

§ 3.7.3 If the Contractor performs Work knowing it to be contrary to applicable laws, statutes, ordinances, codes, rules and regulations, or lawful orders of public authorities, the Contractor shall assume appropriate responsibility for such Work and shall bear the costs attributable to correction.

§ 3.7.4 Concealed or Unknown Conditions

If the Contractor encounters conditions at the site that are (1) subsurface or otherwise concealed physical conditions that differ materially from those indicated in the Contract Documents or (2) unknown physical conditions of an unusual nature that differ materially from those ordinarily found to exist and generally recognized as inherent in construction activities of the character provided for in the Contract Documents, the Contractor shall promptly provide notice to the Owner and the Architect before conditions are disturbed and in no event later than 14 days after first observance of the conditions. The Architect will promptly investigate such conditions and, if the Architect determines that they differ materially and cause an increase or decrease in the Contractor's cost of, or time required for, performance of any part of the Work, will recommend that an equitable adjustment be made in the Contract Sum or Contract Time, or both. If the Architect determines that the conditions at the site are not materially different from those indicated in the Contract Documents and that no change in the terms of the Contract is justified, the Architect shall promptly notify the Owner and Contractor, stating the reasons. If either party disputes the Architect's determination or recommendation, that party may submit a Claim as provided in Article 15.

§ 3.7.5 If, in the course of the Work, the Contractor encounters human remains or recognizes the existence of burial markers, archaeological sites or wetlands not indicated in the Contract Documents, the Contractor shall immediately suspend any operations that would affect them and shall notify the Owner and Architect. Upon receipt of such notice, the Owner shall promptly take any action necessary to obtain governmental authorization required to resume the operations. The Contractor shall continue to suspend such operations until otherwise instructed by the Owner but shall continue with all other operations that do not affect those remains or features. Requests for adjustments in the Contract Sum and Contract Time arising from the existence of such remains or features may be made as provided in Article 15.

§ 3.8 Allowances

§ 3.8.1 The Contractor shall include in the Contract Sum all allowances stated in the Contract Documents. Items covered by allowances shall be supplied for such amounts and by such persons or entities as the Owner may direct,

AIA Document A201 – 2017. Copyright © 1911, 1915, 1918, 1925, 1937, 1951, 1958, 1961, 1963, 1966, 1970, 1976, 1987, 1997, 2007 and 2017. All rights reserved. "The American Institute of Architects," "American Institute of Architects," "AIA," the AIA Logo, and "AIA Contract Documents" are trademarks of The American Institute of Architects. This document was produced at 20:31:18 EDT on 08/06/2026 under Subscription No.20250146710 which expires on 08/21/2026, is not for resale, is licensed for one-time use only, and may only be used in accordance with the AIA Contract Documents® Terms of Service. To report copyright violations, e-mail docinfo@aiacontracts.com.
User Notes: (6a74eee42a65beba85b6bb3c)

but the Contractor shall not be required to employ persons or entities to whom the Contractor has reasonable objection.

§ 3.8.2 Unless otherwise provided in the Contract Documents,

- **.1** allowances shall cover the cost to the Contractor of materials and equipment delivered at the site and all required taxes, less applicable trade discounts;
- **.2** Contractor's costs for unloading and handling at the site, labor, installation costs, overhead, profit, and other expenses contemplated for stated allowance amounts shall be included in the Contract Sum but not in the allowances; and
- **.3** whenever costs are more than or less than allowances, the Contract Sum shall be adjusted accordingly by Change Order. The amount of the Change Order shall reflect (1) the difference between actual costs and the allowances under Section 3.8.2.1 and (2) changes in Contractor's costs under Section 3.8.2.2.

§ 3.8.3 Materials and equipment under an allowance shall be selected by the Owner with reasonable promptness.

§ 3.9 Superintendent

§ 3.9.1 The Contractor shall employ a competent superintendent and necessary assistants who shall be in attendance at the Project site during performance of the Work. The superintendent shall represent the Contractor, and communications given to the superintendent shall be as binding as if given to the Contractor.

§ 3.9.2 The Contractor, as soon as practicable after award of the Contract, shall notify the Owner and Architect of the name and qualifications of a proposed superintendent. Within 14 days of receipt of the information, the Architect may notify the Contractor, stating whether the Owner or the Architect (1) has reasonable objection to the proposed superintendent or (2) requires additional time for review. Failure of the Architect to provide notice within the 14-day period shall constitute notice of no reasonable objection.

§ 3.9.3 The Contractor shall not employ a proposed superintendent to whom the Owner or Architect has made reasonable and timely objection. The Contractor shall not change the superintendent without the Owner's consent, which shall not unreasonably be withheld or delayed.

§ 3.10 Contractor's Construction and Submittal Schedules

§ 3.10.1 The Contractor, promptly after being awarded the Contract, shall submit for the Owner's and Architect's information a Contractor's construction schedule for the Work. The schedule shall contain detail appropriate for the Project, including (1) the date of commencement of the Work, interim schedule milestone dates, and the date of Substantial Completion; (2) an apportionment of the Work by construction activity; and (3) the time required for completion of each portion of the Work. The schedule shall provide for the orderly progression of the Work to completion and shall not exceed time limits current under the Contract Documents. The schedule shall be revised at appropriate intervals as required by the conditions of the Work and Project.

§ 3.10.2 The Contractor, promptly after being awarded the Contract and thereafter as necessary to maintain a current submittal schedule, shall submit a submittal schedule for the Architect's approval. The Architect's approval shall not be unreasonably delayed or withheld. The submittal schedule shall (1) be coordinated with the Contractor's construction schedule, and (2) allow the Architect reasonable time to review submittals. If the Contractor fails to submit a submittal schedule, or fails to provide submittals in accordance with the approved submittal schedule, the Contractor shall not be entitled to any increase in Contract Sum or extension of Contract Time based on the time required for review of submittals.

§ 3.10.3 The Contractor shall perform the Work in general accordance with the most recent schedules submitted to the Owner and Architect.

§ 3.11 Documents and Samples at the Site

The Contractor shall make available, at the Project site, the Contract Documents, including Change Orders, Construction Change Directives, and other Modifications, in good order and marked currently to indicate field changes and selections made during construction, and the approved Shop Drawings, Product Data, Samples, and similar required submittals. These shall be in electronic form or paper copy, available to the Architect and Owner, and delivered to the Architect for submittal to the Owner upon completion of the Work as a record of the Work as

AIA Document A201 – 2017. Copyright © 1911, 1915, 1918, 1925, 1937, 1951, 1958, 1961, 1963, 1966, 1970, 1976, 1987, 1997, 2007 and 2017. All rights reserved. "The American Institute of Architects," "American Institute of Architects," "AIA," the AIA Logo, and "AIA Contract Documents" are trademarks of The American Institute of Architects. This document was produced at 20:31:18 EDT on 08/06/2026 under Subscription No.20250146710 which expires on 08/21/2026, is not for resale, is licensed for one-time use only, and may only be used in accordance with the AIA Contract Documents® Terms of Service. To report copyright violations, e-mail docinfo@aiacontracts.com.
User Notes: (6a74eee42a65beba85b6bb3c)

constructed.

§ 3.12 Shop Drawings, Product Data and Samples

§ 3.12.1 Shop Drawings are drawings, diagrams, schedules, and other data specially prepared for the Work by the Contractor or a Subcontractor, Sub-subcontractor, manufacturer, supplier, or distributor to illustrate some portion of the Work.

§ 3.12.2 Product Data are illustrations, standard schedules, performance charts, instructions, brochures, diagrams, and other information furnished by the Contractor to illustrate materials or equipment for some portion of the Work.

§ 3.12.3 Samples are physical examples that illustrate materials, equipment, or workmanship, and establish standards by which the Work will be judged.

§ 3.12.4 Shop Drawings, Product Data, Samples, and similar submittals are not Contract Documents. Their purpose is to demonstrate how the Contractor proposes to conform to the information given and the design concept expressed in the Contract Documents for those portions of the Work for which the Contract Documents require submittals. Review by the Architect is subject to the limitations of Section 4.2.7. Informational submittals upon which the Architect is not expected to take responsive action may be so identified in the Contract Documents. Submittals that are not required by the Contract Documents may be returned by the Architect without action.

§ 3.12.5 The Contractor shall review for compliance with the Contract Documents, approve, and submit to the Architect, Shop Drawings, Product Data, Samples, and similar submittals required by the Contract Documents, in accordance with the submittal schedule approved by the Architect or, in the absence of an approved submittal schedule, with reasonable promptness and in such sequence as to cause no delay in the Work or in the activities of the Owner or of Separate Contractors.

§ 3.12.6 By submitting Shop Drawings, Product Data, Samples, and similar submittals, the Contractor represents to the Owner and Architect that the Contractor has (1) reviewed and approved them, (2) determined and verified materials, field measurements and field construction criteria related thereto, or will do so, and (3) checked and coordinated the information contained within such submittals with the requirements of the Work and of the Contract Documents.

§ 3.12.7 The Contractor shall perform no portion of the Work for which the Contract Documents require submittal and review of Shop Drawings, Product Data, Samples, or similar submittals, until the respective submittal has been approved by the Architect.

§ 3.12.8 The Work shall be in accordance with approved submittals except that the Contractor shall not be relieved of responsibility for deviations from the requirements of the Contract Documents by the Architect's approval of Shop Drawings, Product Data, Samples, or similar submittals, unless the Contractor has specifically notified the Architect of such deviation at the time of submittal and (1) the Architect has given written approval to the specific deviation as a minor change in the Work, or (2) a Change Order or Construction Change Directive has been issued authorizing the deviation. The Contractor shall not be relieved of responsibility for errors or omissions in Shop Drawings, Product Data, Samples, or similar submittals, by the Architect's approval thereof.

§ 3.12.9 The Contractor shall direct specific attention, in writing or on resubmitted Shop Drawings, Product Data, Samples, or similar submittals, to revisions other than those requested by the Architect on previous submittals. In the absence of such notice, the Architect's approval of a resubmission shall not apply to such revisions.

§ 3.12.10 The Contractor shall not be required to provide professional services that constitute the practice of architecture or engineering unless such services are specifically required by the Contract Documents for a portion of the Work or unless the Contractor needs to provide such services in order to carry out the Contractor's responsibilities for construction means, methods, techniques, sequences, and procedures. The Contractor shall not be required to provide professional services in violation of applicable law.

§ 3.12.10.1 If professional design services or certifications by a design professional related to systems, materials, or equipment are specifically required of the Contractor by the Contract Documents, the Owner and the Architect will specify all performance and design criteria that such services must satisfy. The Contractor shall be entitled to rely upon the adequacy and accuracy of the performance and design criteria provided in the Contract Documents. The

AIA Document A201 – 2017. Copyright © 1911, 1915, 1918, 1925, 1937, 1951, 1958, 1961, 1963, 1966, 1970, 1976, 1987, 1997, 2007 and 2017. All rights reserved. "The American Institute of Architects," "American Institute of Architects," "AIA," the AIA Logo, and "AIA Contract Documents" are trademarks of The American Institute of Architects. This document was produced at 20:31:18 EDT on 08/06/2026 under Subscription No.20250146710 which expires on 08/21/2026, is not for resale, is licensed for one-time use only, and may only be used in accordance with the AIA Contract Documents® Terms of Service. To report copyright violations, e-mail docinfo@aiacontracts.com.
User Notes: (6a74eee42a65beba85b6bb3c)

Contractor shall cause such services or certifications to be provided by an appropriately licensed design professional, whose signature and seal shall appear on all drawings, calculations, specifications, certifications, Shop Drawings, and other submittals prepared by such professional. Shop Drawings, and other submittals related to the Work, designed or certified by such professional, if prepared by others, shall bear such professional's written approval when submitted to the Architect. The Owner and the Architect shall be entitled to rely upon the adequacy and accuracy of the services, certifications, and approvals performed or provided by such design professionals, provided the Owner and Architect have specified to the Contractor the performance and design criteria that such services must satisfy. Pursuant to this Section 3.12.10, the Architect will review and approve or take other appropriate action on submittals only for the limited purpose of checking for conformance with information given and the design concept expressed in the Contract Documents.

§ 3.12.10.2 If the Contract Documents require the Contractor's design professional to certify that the Work has been performed in accordance with the design criteria, the Contractor shall furnish such certifications to the Architect at the time and in the form specified by the Architect.

§ 3.13 Use of Site
The Contractor shall confine operations at the site to areas permitted by applicable laws, statutes, ordinances, codes, rules and regulations, lawful orders of public authorities, and the Contract Documents and shall not unreasonably encumber the site with materials or equipment.

§ 3.14 Cutting and Patching
§ 3.14.1 The Contractor shall be responsible for cutting, fitting, or patching required to complete the Work or to make its parts fit together properly. All areas requiring cutting, fitting, or patching shall be restored to the condition existing prior to the cutting, fitting, or patching, unless otherwise required by the Contract Documents.

§ 3.14.2 The Contractor shall not damage or endanger a portion of the Work or fully or partially completed construction of the Owner or Separate Contractors by cutting, patching, or otherwise altering such construction, or by excavation. The Contractor shall not cut or otherwise alter construction by the Owner or a Separate Contractor except with written consent of the Owner and of the Separate Contractor. Consent shall not be unreasonably withheld. The Contractor shall not unreasonably withhold, from the Owner or a Separate Contractor, its consent to cutting or otherwise altering the Work.

§ 3.15 Cleaning Up
§ 3.15.1 The Contractor shall keep the premises and surrounding area free from accumulation of waste materials and rubbish caused by operations under the Contract. At completion of the Work, the Contractor shall remove waste materials, rubbish, the Contractor's tools, construction equipment, machinery, and surplus materials from and about the Project.

§ 3.15.2 If the Contractor fails to clean up as provided in the Contract Documents, the Owner may do so and the Owner shall be entitled to reimbursement from the Contractor.

§ 3.16 Access to Work
The Contractor shall provide the Owner and Architect with access to the Work in preparation and progress wherever located.

§ 3.17 Royalties, Patents and Copyrights
The Contractor shall pay all royalties and license fees. The Contractor shall defend suits or claims for infringement of copyrights and patent rights and shall hold the Owner and Architect harmless from loss on account thereof, but shall not be responsible for defense or loss when a particular design, process, or product of a particular manufacturer or manufacturers is required by the Contract Documents, or where the copyright violations are contained in Drawings, Specifications, or other documents prepared by the Owner or Architect. However, if an infringement of a copyright or patent is discovered by, or made known to, the Contractor, the Contractor shall be responsible for the loss unless the information is promptly furnished to the Architect.

§ 3.18 Indemnification
§ 3.18.1 To the fullest extent permitted by law, the Contractor shall indemnify and hold harmless the Owner, Architect, Architect's consultants, and agents and employees of any of them from and against claims, damages, losses, and expenses, including but not limited to attorneys' fees, arising out of or resulting from performance of the

AIA Document A201 – 2017. Copyright © 1911, 1915, 1918, 1925, 1937, 1951, 1958, 1961, 1963, 1966, 1970, 1976, 1987, 1997, 2007 and 2017. All rights reserved. "The American Institute of Architects," "American Institute of Architects," "AIA," the AIA Logo, and "AIA Contract Documents" are trademarks of The American Institute of Architects. This document was produced at 20:31:18 EDT on 08/06/2026 under Subscription No.20250146710 which expires on 08/21/2026, is not for resale, is licensed for one-time use only, and may only be used in accordance with the AIA Contract Documents® Terms of Service. To report copyright violations, e-mail docinfo@aiacontracts.com.
User Notes: (6a74eee42a65beba85b6bb3c)

Work, provided that such claim, damage, loss, or expense is attributable to bodily injury, sickness, disease or death, or to injury to or destruction of tangible property (other than the Work itself), but only to the extent caused by the negligent acts or omissions of the Contractor, a Subcontractor, anyone directly or indirectly employed by them, or anyone for whose acts they may be liable, regardless of whether or not such claim, damage, loss, or expense is caused in part by a party indemnified hereunder. Such obligation shall not be construed to negate, abridge, or reduce other rights or obligations of indemnity that would otherwise exist as to a party or person described in this Section 3.18.

§ 3.18.2 In claims against any person or entity indemnified under this Section 3.18 by an employee of the Contractor, a Subcontractor, anyone directly or indirectly employed by them, or anyone for whose acts they may be liable, the indemnification obligation under Section 3.18.1 shall not be limited by a limitation on amount or type of damages, compensation, or benefits payable by or for the Contractor or a Subcontractor under workers' compensation acts, disability benefit acts, or other employee benefit acts.

ARTICLE 4 ARCHITECT

§ 4.1 General

§ 4.1.1 The Architect is the person or entity retained by the Owner pursuant to Section 2.3.2 and identified as such in the Agreement.

§ 4.1.2 Duties, responsibilities, and limitations of authority of the Architect as set forth in the Contract Documents shall not be restricted, modified, or extended without written consent of the Owner, Contractor, and Architect. Consent shall not be unreasonably withheld.

§ 4.2 Administration of the Contract

§ 4.2.1 The Architect will provide administration of the Contract as described in the Contract Documents and will be an Owner's representative during construction until the date the Architect issues the final Certificate for Payment. The Architect will have authority to act on behalf of the Owner only to the extent provided in the Contract Documents.

§ 4.2.2 The Architect will visit the site at intervals appropriate to the stage of construction, or as otherwise agreed with the Owner, to become generally familiar with the progress and quality of the portion of the Work completed, and to determine in general if the Work observed is being performed in a manner indicating that the Work, when fully completed, will be in accordance with the Contract Documents. However, the Architect will not be required to make exhaustive or continuous on-site inspections to check the quality or quantity of the Work. The Architect will not have control over, charge of, or responsibility for the construction means, methods, techniques, sequences or procedures, or for the safety precautions and programs in connection with the Work, since these are solely the Contractor's rights and responsibilities under the Contract Documents.

§ 4.2.3 On the basis of the site visits, the Architect will keep the Owner reasonably informed about the progress and quality of the portion of the Work completed, and promptly report to the Owner (1) known deviations from the Contract Documents, (2) known deviations from the most recent construction schedule submitted by the Contractor, and (3) defects and deficiencies observed in the Work. The Architect will not be responsible for the Contractor's failure to perform the Work in accordance with the requirements of the Contract Documents. The Architect will not have control over or charge of, and will not be responsible for acts or omissions of, the Contractor, Subcontractors, or their agents or employees, or any other persons or entities performing portions of the Work.

§ 4.2.4 Communications

The Owner and Contractor shall include the Architect in all communications that relate to or affect the Architect's services or professional responsibilities. The Owner shall promptly notify the Architect of the substance of any direct communications between the Owner and the Contractor otherwise relating to the Project. Communications by and with the Architect's consultants shall be through the Architect. Communications by and with Subcontractors and suppliers shall be through the Contractor. Communications by and with Separate Contractors shall be through the Owner. The Contract Documents may specify other communication protocols.

§ 4.2.5 Based on the Architect's evaluations of the Contractor's Applications for Payment, the Architect will review and certify the amounts due the Contractor and will issue Certificates for Payment in such amounts.

AIA Document A201 – 2017. Copyright © 1911, 1915, 1918, 1925, 1937, 1951, 1958, 1961, 1963, 1966, 1970, 1976, 1987, 1997, 2007 and 2017. All rights reserved. "The American Institute of Architects," "American Institute of Architects," "AIA," the AIA Logo, and "AIA Contract Documents" are trademarks of The American Institute of Architects. This document was produced at 20:31:18 EDT on 08/06/2026 under Subscription No.20250146710 which expires on 08/21/2026, is not for resale, is licensed for one-time use only, and may only be used in accordance with the AIA Contract Documents® Terms of Service. To report copyright violations, e-mail docinfo@aiacontracts.com.
User Notes: (6a74eee42a65beba85b6bb3c)

§ 4.2.6 The Architect has authority to reject Work that does not conform to the Contract Documents. Whenever the Architect considers it necessary or advisable, the Architect will have authority to require inspection or testing of the Work in accordance with Sections 13.4.2 and 13.4.3, whether or not the Work is fabricated, installed or completed. However, neither this authority of the Architect nor a decision made in good faith either to exercise or not to exercise such authority shall give rise to a duty or responsibility of the Architect to the Contractor, Subcontractors, suppliers, their agents or employees, or other persons or entities performing portions of the Work.

§ 4.2.7 The Architect will review and approve, or take other appropriate action upon, the Contractor's submittals such as Shop Drawings, Product Data, and Samples, but only for the limited purpose of checking for conformance with information given and the design concept expressed in the Contract Documents. The Architect's action will be taken in accordance with the submittal schedule approved by the Architect or, in the absence of an approved submittal schedule, with reasonable promptness while allowing sufficient time in the Architect's professional judgment to permit adequate review. Review of such submittals is not conducted for the purpose of determining the accuracy and completeness of other details such as dimensions and quantities, or for substantiating instructions for installation or performance of equipment or systems, all of which remain the responsibility of the Contractor as required by the Contract Documents. The Architect's review of the Contractor's submittals shall not relieve the Contractor of the obligations under Sections 3.3, 3.5, and 3.12. The Architect's review shall not constitute approval of safety precautions or of any construction means, methods, techniques, sequences, or procedures. The Architect's approval of a specific item shall not indicate approval of an assembly of which the item is a component.

§ 4.2.8 The Architect will prepare Change Orders and Construction Change Directives, and may order minor changes in the Work as provided in Section 7.4. The Architect will investigate and make determinations and recommendations regarding concealed and unknown conditions as provided in Section 3.7.4.

§ 4.2.9 The Architect will conduct inspections to determine the date or dates of Substantial Completion and the date of final completion; issue Certificates of Substantial Completion pursuant to Section 9.8; receive and forward to the Owner, for the Owner's review and records, written warranties and related documents required by the Contract and assembled by the Contractor pursuant to Section 9.10; and issue a final Certificate for Payment pursuant to Section 9.10.

§ 4.2.10 If the Owner and Architect agree, the Architect will provide one or more Project representatives to assist in carrying out the Architect's responsibilities at the site. The Owner shall notify the Contractor of any change in the duties, responsibilities and limitations of authority of the Project representatives.

§ 4.2.11 The Architect will interpret and decide matters concerning performance under, and requirements of, the Contract Documents on written request of either the Owner or Contractor. The Architect's response to such requests will be made in writing within any time limits agreed upon or otherwise with reasonable promptness.

§ 4.2.12 Interpretations and decisions of the Architect will be consistent with the intent of, and reasonably inferable from, the Contract Documents and will be in writing or in the form of drawings. When making such interpretations and decisions, the Architect will endeavor to secure faithful performance by both Owner and Contractor, will not show partiality to either, and will not be liable for results of interpretations or decisions rendered in good faith.

§ 4.2.13 The Architect's decisions on matters relating to aesthetic effect will be final if consistent with the intent expressed in the Contract Documents.

§ 4.2.14 The Architect will review and respond to requests for information about the Contract Documents. The Architect's response to such requests will be made in writing within any time limits agreed upon or otherwise with reasonable promptness. If appropriate, the Architect will prepare and issue supplemental Drawings and Specifications in response to the requests for information.

ARTICLE 5 SUBCONTRACTORS

§ 5.1 Definitions

§ 5.1.1 A Subcontractor is a person or entity who has a direct contract with the Contractor to perform a portion of the Work at the site. The term "Subcontractor" is referred to throughout the Contract Documents as if singular in number and means a Subcontractor or an authorized representative of the Subcontractor. The term "Subcontractor" does not include a Separate Contractor or the subcontractors of a Separate Contractor.

AIA Document A201 – 2017. Copyright © 1911, 1915, 1918, 1925, 1937, 1951, 1958, 1961, 1963, 1966, 1970, 1976, 1987, 1997, 2007 and 2017. All rights reserved. "The American Institute of Architects," "American Institute of Architects," "AIA," the AIA Logo, and "AIA Contract Documents" are trademarks of The American Institute of Architects. This document was produced at 20:31:18 EDT on 08/06/2026 under Subscription No.20250146710 which expires on 08/21/2026, is not for resale, is licensed for one-time use only, and may only be used in accordance with the AIA Contract Documents® Terms of Service. To report copyright violations, e-mail docinfo@aiacontracts.com.
User Notes: (6a74eee42a65beba85b6bb3c)

§ 5.1.2 A Sub-subcontractor is a person or entity who has a direct or indirect contract with a Subcontractor to perform a portion of the Work at the site. The term "Sub-subcontractor" is referred to throughout the Contract Documents as if singular in number and means a Sub-subcontractor or an authorized representative of the Sub-subcontractor.

§ 5.2 Award of Subcontracts and Other Contracts for Portions of the Work

§ 5.2.1 Unless otherwise stated in the Contract Documents, the Contractor, as soon as practicable after award of the Contract, shall notify the Owner and Architect of the persons or entities proposed for each principal portion of the Work, including those who are to furnish materials or equipment fabricated to a special design. Within 14 days of receipt of the information, the Architect may notify the Contractor whether the Owner or the Architect (1) has reasonable objection to any such proposed person or entity or (2) requires additional time for review. Failure of the Architect to provide notice within the 14-day period shall constitute notice of no reasonable objection.

§ 5.2.2 The Contractor shall not contract with a proposed person or entity to whom the Owner or Architect has made reasonable and timely objection. The Contractor shall not be required to contract with anyone to whom the Contractor has made reasonable objection.

§ 5.2.3 If the Owner or Architect has reasonable objection to a person or entity proposed by the Contractor, the Contractor shall propose another to whom the Owner or Architect has no reasonable objection. If the proposed but rejected Subcontractor was reasonably capable of performing the Work, the Contract Sum and Contract Time shall be increased or decreased by the difference, if any, occasioned by such change, and an appropriate Change Order shall be issued before commencement of the substitute Subcontractor's Work. However, no increase in the Contract Sum or Contract Time shall be allowed for such change unless the Contractor has acted promptly and responsively in submitting names as required.

§ 5.2.4 The Contractor shall not substitute a Subcontractor, person, or entity for one previously selected if the Owner or Architect makes reasonable objection to such substitution.

§ 5.3 Subcontractual Relations

By appropriate written agreement, the Contractor shall require each Subcontractor, to the extent of the Work to be performed by the Subcontractor, to be bound to the Contractor by terms of the Contract Documents, and to assume toward the Contractor all the obligations and responsibilities, including the responsibility for safety of the Subcontractor's Work that the Contractor, by these Contract Documents, assumes toward the Owner and Architect. Each subcontract agreement shall preserve and protect the rights of the Owner and Architect under the Contract Documents with respect to the Work to be performed by the Subcontractor so that subcontracting thereof will not prejudice such rights, and shall allow to the Subcontractor, unless specifically provided otherwise in the subcontract agreement, the benefit of all rights, remedies, and redress against the Contractor that the Contractor, by the Contract Documents, has against the Owner. Where appropriate, the Contractor shall require each Subcontractor to enter into similar agreements with Sub-subcontractors. The Contractor shall make available to each proposed Subcontractor, prior to the execution of the subcontract agreement, copies of the Contract Documents to which the Subcontractor will be bound, and, upon written request of the Subcontractor, identify to the Subcontractor terms and conditions of the proposed subcontract agreement that may be at variance with the Contract Documents. Subcontractors will similarly make copies of applicable portions of such documents available to their respective proposed Sub-subcontractors.

§ 5.4 Contingent Assignment of Subcontracts

§ 5.4.1 Each subcontract agreement for a portion of the Work is assigned by the Contractor to the Owner, provided that

- **.1** assignment is effective only after termination of the Contract by the Owner for cause pursuant to Section 14.2 and only for those subcontract agreements that the Owner accepts by notifying the Subcontractor and Contractor; and
- **.2** assignment is subject to the prior rights of the surety, if any, obligated under bond relating to the Contract.

When the Owner accepts the assignment of a subcontract agreement, the Owner assumes the Contractor's rights and obligations under the subcontract.

AIA Document A201 – 2017. Copyright © 1911, 1915, 1918, 1925, 1937, 1951, 1958, 1961, 1963, 1966, 1970, 1976, 1987, 1997, 2007 and 2017. All rights reserved. "The American Institute of Architects," "American Institute of Architects," "AIA," the AIA Logo, and "AIA Contract Documents" are trademarks of The American Institute of Architects. This document was produced at 20:31:18 EDT on 08/06/2026 under Subscription No.20250146710 which expires on 08/21/2026, is not for resale, is licensed for one-time use only, and may only be used in accordance with the AIA Contract Documents® Terms of Service. To report copyright violations, e-mail docinfo@aiacontracts.com.
User Notes: (6a74eee42a65beba85b6bb3c)

§ 5.4.2 Upon such assignment, if the Work has been suspended for more than 30 days, the Subcontractor's compensation shall be equitably adjusted for increases in cost resulting from the suspension.

§ 5.4.3 Upon assignment to the Owner under this Section 5.4, the Owner may further assign the subcontract to a successor contractor or other entity. If the Owner assigns the subcontract to a successor contractor or other entity, the Owner shall nevertheless remain legally responsible for all of the successor contractor's obligations under the subcontract.

ARTICLE 6 CONSTRUCTION BY OWNER OR BY SEPARATE CONTRACTORS

§ 6.1 Owner's Right to Perform Construction and to Award Separate Contracts

§ 6.1.1 The term "Separate Contractor(s)" shall mean other contractors retained by the Owner under separate agreements. The Owner reserves the right to perform construction or operations related to the Project with the Owner's own forces, and with Separate Contractors retained under Conditions of the Contract substantially similar to those of this Contract, including those provisions of the Conditions of the Contract related to insurance and waiver of subrogation.

§ 6.1.2 When separate contracts are awarded for different portions of the Project or other construction or operations on the site, the term "Contractor" in the Contract Documents in each case shall mean the Contractor who executes each separate Owner-Contractor Agreement.

§ 6.1.3 The Owner shall provide for coordination of the activities of the Owner's own forces and of each Separate Contractor with the Work of the Contractor, who shall cooperate with them. The Contractor shall participate with any Separate Contractors and the Owner in reviewing their construction schedules. The Contractor shall make any revisions to its construction schedule deemed necessary after a joint review and mutual agreement. The construction schedules shall then constitute the schedules to be used by the Contractor, Separate Contractors, and the Owner until subsequently revised.

§ 6.1.4 Unless otherwise provided in the Contract Documents, when the Owner performs construction or operations related to the Project with the Owner's own forces or with Separate Contractors, the Owner or its Separate Contractors shall have the same obligations and rights that the Contractor has under the Conditions of the Contract, including, without excluding others, those stated in Article 3, this Article 6, and Articles 10, 11, and 12.

§ 6.2 Mutual Responsibility

§ 6.2.1 The Contractor shall afford the Owner and Separate Contractors reasonable opportunity for introduction and storage of their materials and equipment and performance of their activities, and shall connect and coordinate the Contractor's construction and operations with theirs as required by the Contract Documents.

§ 6.2.2 If part of the Contractor's Work depends for proper execution or results upon construction or operations by the Owner or a Separate Contractor, the Contractor shall, prior to proceeding with that portion of the Work, promptly notify the Architect of apparent discrepancies or defects in the construction or operations by the Owner or Separate Contractor that would render it unsuitable for proper execution and results of the Contractor's Work. Failure of the Contractor to notify the Architect of apparent discrepancies or defects prior to proceeding with the Work shall constitute an acknowledgment that the Owner's or Separate Contractor's completed or partially completed construction is fit and proper to receive the Contractor's Work. The Contractor shall not be responsible for discrepancies or defects in the construction or operations by the Owner or Separate Contractor that are not apparent.

§ 6.2.3 The Contractor shall reimburse the Owner for costs the Owner incurs that are payable to a Separate Contractor because of the Contractor's delays, improperly timed activities or defective construction. The Owner shall be responsible to the Contractor for costs the Contractor incurs because of a Separate Contractor's delays, improperly timed activities, damage to the Work or defective construction.

§ 6.2.4 The Contractor shall promptly remedy damage that the Contractor wrongfully causes to completed or partially completed construction or to property of the Owner or Separate Contractor as provided in Section 10.2.5.

§ 6.2.5 The Owner and each Separate Contractor shall have the same responsibilities for cutting and patching as are described for the Contractor in Section 3.14.

AIA Document A201 – 2017. Copyright © 1911, 1915, 1918, 1925, 1937, 1951, 1958, 1961, 1963, 1966, 1970, 1976, 1987, 1997, 2007 and 2017. All rights reserved. "The American Institute of Architects," "American Institute of Architects," "AIA," the AIA Logo, and "AIA Contract Documents" are trademarks of The American Institute of Architects. This document was produced at 20:31:18 EDT on 08/06/2026 under Subscription No.20250146710 which expires on 08/21/2026, is not for resale, is licensed for one-time use only, and may only be used in accordance with the AIA Contract Documents® Terms of Service. To report copyright violations, e-mail docinfo@aiacontracts.com.
User Notes: (6a74eee42a65beba85b6bb3c)

§ 6.3 Owner's Right to Clean Up
If a dispute arises among the Contractor, Separate Contractors, and the Owner as to the responsibility under their respective contracts for maintaining the premises and surrounding area free from waste materials and rubbish, the Owner may clean up and the Architect will allocate the cost among those responsible.

ARTICLE 7 CHANGES IN THE WORK

§ 7.1 General
§ 7.1.1 Changes in the Work may be accomplished after execution of the Contract, and without invalidating the Contract, by Change Order, Construction Change Directive or order for a minor change in the Work, subject to the limitations stated in this Article 7 and elsewhere in the Contract Documents.

§ 7.1.2 A Change Order shall be based upon agreement among the Owner, Contractor, and Architect. A Construction Change Directive requires agreement by the Owner and Architect and may or may not be agreed to by the Contractor. An order for a minor change in the Work may be issued by the Architect alone.

§ 7.1.3 Changes in the Work shall be performed under applicable provisions of the Contract Documents. The Contractor shall proceed promptly with changes in the Work, unless otherwise provided in the Change Order, Construction Change Directive, or order for a minor change in the Work.

§ 7.2 Change Orders
§ 7.2.1 A Change Order is a written instrument prepared by the Architect and signed by the Owner, Contractor, and Architect stating their agreement upon all of the following:

- **.1** The change in the Work;
- **.2** The amount of the adjustment, if any, in the Contract Sum; and
- **.3** The extent of the adjustment, if any, in the Contract Time.

§ 7.3 Construction Change Directives
§ 7.3.1 A Construction Change Directive is a written order prepared by the Architect and signed by the Owner and Architect, directing a change in the Work prior to agreement on adjustment, if any, in the Contract Sum or Contract Time, or both. The Owner may by Construction Change Directive, without invalidating the Contract, order changes in the Work within the general scope of the Contract consisting of additions, deletions, or other revisions, the Contract Sum and Contract Time being adjusted accordingly.

§ 7.3.2 A Construction Change Directive shall be used in the absence of total agreement on the terms of a Change Order.

§ 7.3.3 If the Construction Change Directive provides for an adjustment to the Contract Sum, the adjustment shall be based on one of the following methods:

- **.1** Mutual acceptance of a lump sum properly itemized and supported by sufficient substantiating data to permit evaluation;
- **.2** Unit prices stated in the Contract Documents or subsequently agreed upon;
- **.3** Cost to be determined in a manner agreed upon by the parties and a mutually acceptable fixed or percentage fee; or
- **.4** As provided in Section 7.3.4.

§ 7.3.4 If the Contractor does not respond promptly or disagrees with the method for adjustment in the Contract Sum, the Architect shall determine the adjustment on the basis of reasonable expenditures and savings of those performing the Work attributable to the change, including, in case of an increase in the Contract Sum, an amount for overhead and profit as set forth in the Agreement, or if no such amount is set forth in the Agreement, a reasonable amount. In such case, and also under Section 7.3.3.3, the Contractor shall keep and present, in such form as the Architect may prescribe, an itemized accounting together with appropriate supporting data. Unless otherwise provided in the Contract Documents, costs for the purposes of this Section 7.3.4 shall be limited to the following:

- **.1** Costs of labor, including applicable payroll taxes, fringe benefits required by agreement or custom, workers' compensation insurance, and other employee costs approved by the Architect;
- **.2** Costs of materials, supplies, and equipment, including cost of transportation, whether incorporated or consumed;

AIA Document A201 – 2017. Copyright © 1911, 1915, 1918, 1925, 1937, 1951, 1958, 1961, 1963, 1966, 1970, 1976, 1987, 1997, 2007 and 2017. All rights reserved. "The American Institute of Architects," "American Institute of Architects," "AIA," the AIA Logo, and "AIA Contract Documents" are trademarks of The American Institute of Architects. This document was produced at 20:31:18 EDT on 08/06/2026 under Subscription No.20250146710 which expires on 08/21/2026, is not for resale, is licensed for one-time use only, and may only be used in accordance with the AIA Contract Documents® Terms of Service. To report copyright violations, e-mail docinfo@aiacontracts.com.
User Notes: (6a74eee42a65beba85b6bb3c)

.3 Rental costs of machinery and equipment, exclusive of hand tools, whether rented from the Contractor or others;

.4 Costs of premiums for all bonds and insurance, permit fees, and sales, use, or similar taxes, directly related to the change; and

.5 Costs of supervision and field office personnel directly attributable to the change.

§ 7.3.5 If the Contractor disagrees with the adjustment in the Contract Time, the Contractor may make a Claim in accordance with applicable provisions of Article 15.

§ 7.3.6 Upon receipt of a Construction Change Directive, the Contractor shall promptly proceed with the change in the Work involved and advise the Architect of the Contractor's agreement or disagreement with the method, if any, provided in the Construction Change Directive for determining the proposed adjustment in the Contract Sum or Contract Time.

§ 7.3.7 A Construction Change Directive signed by the Contractor indicates the Contractor's agreement therewith, including adjustment in Contract Sum and Contract Time or the method for determining them. Such agreement shall be effective immediately and shall be recorded as a Change Order.

§ 7.3.8 The amount of credit to be allowed by the Contractor to the Owner for a deletion or change that results in a net decrease in the Contract Sum shall be actual net cost as confirmed by the Architect. When both additions and credits covering related Work or substitutions are involved in a change, the allowance for overhead and profit shall be figured on the basis of net increase, if any, with respect to that change.

§ 7.3.9 Pending final determination of the total cost of a Construction Change Directive to the Owner, the Contractor may request payment for Work completed under the Construction Change Directive in Applications for Payment. The Architect will make an interim determination for purposes of monthly certification for payment for those costs and certify for payment the amount that the Architect determines, in the Architect's professional judgment, to be reasonably justified. The Architect's interim determination of cost shall adjust the Contract Sum on the same basis as a Change Order, subject to the right of either party to disagree and assert a Claim in accordance with Article 15.

§ 7.3.10 When the Owner and Contractor agree with a determination made by the Architect concerning the adjustments in the Contract Sum and Contract Time, or otherwise reach agreement upon the adjustments, such agreement shall be effective immediately and the Architect will prepare a Change Order. Change Orders may be issued for all or any part of a Construction Change Directive.

§ 7.4 Minor Changes in the Work

The Architect may order minor changes in the Work that are consistent with the intent of the Contract Documents and do not involve an adjustment in the Contract Sum or an extension of the Contract Time. The Architect's order for minor changes shall be in writing. If the Contractor believes that the proposed minor change in the Work will affect the Contract Sum or Contract Time, the Contractor shall notify the Architect and shall not proceed to implement the change in the Work. If the Contractor performs the Work set forth in the Architect's order for a minor change without prior notice to the Architect that such change will affect the Contract Sum or Contract Time, the Contractor waives any adjustment to the Contract Sum or extension of the Contract Time.

ARTICLE 8 TIME

§ 8.1 Definitions

§ 8.1.1 Unless otherwise provided, Contract Time is the period of time, including authorized adjustments, allotted in the Contract Documents for Substantial Completion of the Work.

§ 8.1.2 The date of commencement of the Work is the date established in the Agreement.

§ 8.1.3 The date of Substantial Completion is the date certified by the Architect in accordance with Section 9.8.

§ 8.1.4 The term "day" as used in the Contract Documents shall mean calendar day unless otherwise specifically defined.

AIA Document A201 – 2017. Copyright © 1911, 1915, 1918, 1925, 1937, 1951, 1958, 1961, 1963, 1966, 1970, 1976, 1987, 1997, 2007 and 2017. All rights reserved. "The American Institute of Architects," "American Institute of Architects," "AIA," the AIA Logo, and "AIA Contract Documents" are trademarks of The American Institute of Architects. This document was produced at 20:31:18 EDT on 08/06/2026 under Subscription No.20250146710 which expires on 08/21/2026, is not for resale, is licensed for one-time use only, and may only be used in accordance with the AIA Contract Documents® Terms of Service. To report copyright violations, e-mail docinfo@aiacontracts.com.
User Notes: (6a74eee42a65beba85b6bb3c)

§ 8.2 Progress and Completion

§ 8.2.1 Time limits stated in the Contract Documents are of the essence of the Contract. By executing the Agreement, the Contractor confirms that the Contract Time is a reasonable period for performing the Work.

§ 8.2.2 The Contractor shall not knowingly, except by agreement or instruction of the Owner in writing, commence the Work prior to the effective date of insurance required to be furnished by the Contractor and Owner.

§ 8.2.3 The Contractor shall proceed expeditiously with adequate forces and shall achieve Substantial Completion within the Contract Time.

§ 8.3 Delays and Extensions of Time

§ 8.3.1 If the Contractor is delayed at any time in the commencement or progress of the Work by (1) an act or neglect of the Owner or Architect, of an employee of either, or of a Separate Contractor; (2) by changes ordered in the Work; (3) by labor disputes, fire, unusual delay in deliveries, unavoidable casualties, adverse weather conditions documented in accordance with Section 15.1.6.2, or other causes beyond the Contractor's control; (4) by delay authorized by the Owner pending mediation and binding dispute resolution; or (5) by other causes that the Contractor asserts, and the Architect determines, justify delay, then the Contract Time shall be extended for such reasonable time as the Architect may determine.

§ 8.3.2 Claims relating to time shall be made in accordance with applicable provisions of Article 15.

§ 8.3.3 This Section 8.3 does not preclude recovery of damages for delay by either party under other provisions of the Contract Documents.

ARTICLE 9 PAYMENTS AND COMPLETION

§ 9.1 Contract Sum

§ 9.1.1 The Contract Sum is stated in the Agreement and, including authorized adjustments, is the total amount payable by the Owner to the Contractor for performance of the Work under the Contract Documents.

§ 9.1.2 If unit prices are stated in the Contract Documents or subsequently agreed upon, and if quantities originally contemplated are materially changed so that application of such unit prices to the actual quantities causes substantial inequity to the Owner or Contractor, the applicable unit prices shall be equitably adjusted.

§ 9.2 Schedule of Values

Where the Contract is based on a stipulated sum or Guaranteed Maximum Price, the Contractor shall submit a schedule of values to the Architect before the first Application for Payment, allocating the entire Contract Sum to the various portions of the Work. The schedule of values shall be prepared in the form, and supported by the data to substantiate its accuracy, required by the Architect. This schedule, unless objected to by the Architect, shall be used as a basis for reviewing the Contractor's Applications for Payment. Any changes to the schedule of values shall be submitted to the Architect and supported by such data to substantiate its accuracy as the Architect may require, and unless objected to by the Architect, shall be used as a basis for reviewing the Contractor's subsequent Applications for Payment.

§ 9.3 Applications for Payment

§ 9.3.1 At least ten days before the date established for each progress payment, the Contractor shall submit to the Architect an itemized Application for Payment prepared in accordance with the schedule of values, if required under Section 9.2, for completed portions of the Work. The application shall be notarized, if required, and supported by all data substantiating the Contractor's right to payment that the Owner or Architect require, such as copies of requisitions, and releases and waivers of liens from Subcontractors and suppliers, and shall reflect retainage if provided for in the Contract Documents.

§ 9.3.1.1 As provided in Section 7.3.9, such applications may include requests for payment on account of changes in the Work that have been properly authorized by Construction Change Directives, or by interim determinations of the Architect, but not yet included in Change Orders.

§ 9.3.1.2 Applications for Payment shall not include requests for payment for portions of the Work for which the Contractor does not intend to pay a Subcontractor or supplier, unless such Work has been performed by others

AIA Document A201 – 2017. Copyright © 1911, 1915, 1918, 1925, 1937, 1951, 1958, 1961, 1963, 1966, 1970, 1976, 1987, 1997, 2007 and 2017. All rights reserved. "The American Institute of Architects," "American Institute of Architects," "AIA," the AIA Logo, and "AIA Contract Documents" are trademarks of The American Institute of Architects. This document was produced at 20:31:18 EDT on 08/06/2026 under Subscription No.20250146710 which expires on 08/21/2026, is not for resale, is licensed for one-time use only, and may only be used in accordance with the AIA Contract Documents® Terms of Service. To report copyright violations, e-mail docinfo@aiacontracts.com.
User Notes: (6a74eee42a65beba85b6bb3c)

whom the Contractor intends to pay.

§ 9.3.2 Unless otherwise provided in the Contract Documents, payments shall be made on account of materials and equipment delivered and suitably stored at the site for subsequent incorporation in the Work. If approved in advance by the Owner, payment may similarly be made for materials and equipment suitably stored off the site at a location agreed upon in writing. Payment for materials and equipment stored on or off the site shall be conditioned upon compliance by the Contractor with procedures satisfactory to the Owner to establish the Owner's title to such materials and equipment or otherwise protect the Owner's interest, and shall include the costs of applicable insurance, storage, and transportation to the site, for such materials and equipment stored off the site.

§ 9.3.3 The Contractor warrants that title to all Work covered by an Application for Payment will pass to the Owner no later than the time of payment. The Contractor further warrants that upon submittal of an Application for Payment all Work for which Certificates for Payment have been previously issued and payments received from the Owner shall, to the best of the Contractor's knowledge, information, and belief, be free and clear of liens, claims, security interests, or encumbrances, in favor of the Contractor, Subcontractors, suppliers, or other persons or entities that provided labor, materials, and equipment relating to the Work.

§ 9.4 Certificates for Payment

§ 9.4.1 The Architect will, within seven days after receipt of the Contractor's Application for Payment, either (1) issue to the Owner a Certificate for Payment in the full amount of the Application for Payment, with a copy to the Contractor; or (2) issue to the Owner a Certificate for Payment for such amount as the Architect determines is properly due, and notify the Contractor and Owner of the Architect's reasons for withholding certification in part as provided in Section 9.5.1; or (3) withhold certification of the entire Application for Payment, and notify the Contractor and Owner of the Architect's reason for withholding certification in whole as provided in Section 9.5.1.

§ 9.4.2 The issuance of a Certificate for Payment will constitute a representation by the Architect to the Owner, based on the Architect's evaluation of the Work and the data in the Application for Payment, that, to the best of the Architect's knowledge, information, and belief, the Work has progressed to the point indicated, the quality of the Work is in accordance with the Contract Documents, and that the Contractor is entitled to payment in the amount certified. The foregoing representations are subject to an evaluation of the Work for conformance with the Contract Documents upon Substantial Completion, to results of subsequent tests and inspections, to correction of minor deviations from the Contract Documents prior to completion, and to specific qualifications expressed by the Architect. However, the issuance of a Certificate for Payment will not be a representation that the Architect has (1) made exhaustive or continuous on-site inspections to check the quality or quantity of the Work; (2) reviewed construction means, methods, techniques, sequences, or procedures; (3) reviewed copies of requisitions received from Subcontractors and suppliers and other data requested by the Owner to substantiate the Contractor's right to payment; or (4) made examination to ascertain how or for what purpose the Contractor has used money previously paid on account of the Contract Sum.

§ 9.5 Decisions to Withhold Certification

§ 9.5.1 The Architect may withhold a Certificate for Payment in whole or in part, to the extent reasonably necessary to protect the Owner, if in the Architect's opinion the representations to the Owner required by Section 9.4.2 cannot be made. If the Architect is unable to certify payment in the amount of the Application, the Architect will notify the Contractor and Owner as provided in Section 9.4.1. If the Contractor and Architect cannot agree on a revised amount, the Architect will promptly issue a Certificate for Payment for the amount for which the Architect is able to make such representations to the Owner. The Architect may also withhold a Certificate for Payment or, because of subsequently discovered evidence, may nullify the whole or a part of a Certificate for Payment previously issued, to such extent as may be necessary in the Architect's opinion to protect the Owner from loss for which the Contractor is responsible, including loss resulting from acts and omissions described in Section 3.3.2, because of

- **.1** defective Work not remedied;
- **.2** third party claims filed or reasonable evidence indicating probable filing of such claims, unless security acceptable to the Owner is provided by the Contractor;
- **.3** failure of the Contractor to make payments properly to Subcontractors or suppliers for labor, materials or equipment;
- **.4** reasonable evidence that the Work cannot be completed for the unpaid balance of the Contract Sum;
- **.5** damage to the Owner or a Separate Contractor;
- **.6** reasonable evidence that the Work will not be completed within the Contract Time, and that the unpaid balance would not be adequate to cover actual or liquidated damages for the anticipated delay;

AIA Document A201 – 2017. Copyright © 1911, 1915, 1918, 1925, 1937, 1951, 1958, 1961, 1963, 1966, 1970, 1976, 1987, 1997, 2007 and 2017. All rights reserved. "The American Institute of Architects," "American Institute of Architects," "AIA," the AIA Logo, and "AIA Contract Documents" are trademarks of The American Institute of Architects. This document was produced at 20:31:18 EDT on 08/06/2026 under Subscription No.20250146710 which expires on 08/21/2026, is not for resale, is licensed for one-time use only, and may only be used in accordance with the AIA Contract Documents® Terms of Service. To report copyright violations, e-mail docinfo@aiacontracts.com.
User Notes: (6a74eee42a65beba85b6bb3c)

or

.7 repeated failure to carry out the Work in accordance with the Contract Documents.

§ 9.5.2 When either party disputes the Architect's decision regarding a Certificate for Payment under Section 9.5.1, in whole or in part, that party may submit a Claim in accordance with Article 15.

§ 9.5.3 When the reasons for withholding certification are removed, certification will be made for amounts previously withheld.

§ 9.5.4 If the Architect withholds certification for payment under Section 9.5.1.3, the Owner may, at its sole option, issue joint checks to the Contractor and to any Subcontractor or supplier to whom the Contractor failed to make payment for Work properly performed or material or equipment suitably delivered. If the Owner makes payments by joint check, the Owner shall notify the Architect and the Contractor shall reflect such payment on its next Application for Payment.

§ 9.6 Progress Payments

§ 9.6.1 After the Architect has issued a Certificate for Payment, the Owner shall make payment in the manner and within the time provided in the Contract Documents, and shall so notify the Architect.

§ 9.6.2 The Contractor shall pay each Subcontractor, no later than seven days after receipt of payment from the Owner, the amount to which the Subcontractor is entitled, reflecting percentages actually retained from payments to the Contractor on account of the Subcontractor's portion of the Work. The Contractor shall, by appropriate agreement with each Subcontractor, require each Subcontractor to make payments to Sub-subcontractors in a similar manner.

§ 9.6.3 The Architect will, on request, furnish to a Subcontractor, if practicable, information regarding percentages of completion or amounts applied for by the Contractor and action taken thereon by the Architect and Owner on account of portions of the Work done by such Subcontractor.

§ 9.6.4 The Owner has the right to request written evidence from the Contractor that the Contractor has properly paid Subcontractors and suppliers amounts paid by the Owner to the Contractor for subcontracted Work. If the Contractor fails to furnish such evidence within seven days, the Owner shall have the right to contact Subcontractors and suppliers to ascertain whether they have been properly paid. Neither the Owner nor Architect shall have an obligation to pay, or to see to the payment of money to, a Subcontractor or supplier, except as may otherwise be required by law.

§ 9.6.5 The Contractor's payments to suppliers shall be treated in a manner similar to that provided in Sections 9.6.2, 9.6.3 and 9.6.4.

§ 9.6.6 A Certificate for Payment, a progress payment, or partial or entire use or occupancy of the Project by the Owner shall not constitute acceptance of Work not in accordance with the Contract Documents.

§ 9.6.7 Unless the Contractor provides the Owner with a payment bond in the full penal sum of the Contract Sum, payments received by the Contractor for Work properly performed by Subcontractors or provided by suppliers shall be held by the Contractor for those Subcontractors or suppliers who performed Work or furnished materials, or both, under contract with the Contractor for which payment was made by the Owner. Nothing contained herein shall require money to be placed in a separate account and not commingled with money of the Contractor, create any fiduciary liability or tort liability on the part of the Contractor for breach of trust, or entitle any person or entity to an award of punitive damages against the Contractor for breach of the requirements of this provision.

§ 9.6.8 Provided the Owner has fulfilled its payment obligations under the Contract Documents, the Contractor shall defend and indemnify the Owner from all loss, liability, damage or expense, including reasonable attorney's fees and litigation expenses, arising out of any lien claim or other claim for payment by any Subcontractor or supplier of any tier. Upon receipt of notice of a lien claim or other claim for payment, the Owner shall notify the Contractor. If approved by the applicable court, when required, the Contractor may substitute a surety bond for the property against which the lien or other claim for payment has been asserted.

AIA Document A201 – 2017. Copyright © 1911, 1915, 1918, 1925, 1937, 1951, 1958, 1961, 1963, 1966, 1970, 1976, 1987, 1997, 2007 and 2017. All rights reserved. "The American Institute of Architects," "American Institute of Architects," "AIA," the AIA Logo, and "AIA Contract Documents" are trademarks of The American Institute of Architects. This document was produced at 20:31:18 EDT on 08/06/2026 under Subscription No.20250146710 which expires on 08/21/2026, is not for resale, is licensed for one-time use only, and may only be used in accordance with the AIA Contract Documents® Terms of Service. To report copyright violations, e-mail docinfo@aiacontracts.com.
User Notes: (6a74eee42a65beba85b6bb3c)

§ 9.7 Failure of Payment
If the Architect does not issue a Certificate for Payment, through no fault of the Contractor, within seven days after receipt of the Contractor's Application for Payment, or if the Owner does not pay the Contractor within seven days after the date established in the Contract Documents, the amount certified by the Architect or awarded by binding dispute resolution, then the Contractor may, upon seven additional days' notice to the Owner and Architect, stop the Work until payment of the amount owing has been received. The Contract Time shall be extended appropriately and the Contract Sum shall be increased by the amount of the Contractor's reasonable costs of shutdown, delay and start-up, plus interest as provided for in the Contract Documents.

§ 9.8 Substantial Completion
§ 9.8.1 Substantial Completion is the stage in the progress of the Work when the Work or designated portion thereof is sufficiently complete in accordance with the Contract Documents so that the Owner can occupy or utilize the Work for its intended use.

§ 9.8.2 When the Contractor considers that the Work, or a portion thereof which the Owner agrees to accept separately, is substantially complete, the Contractor shall prepare and submit to the Architect a comprehensive list of items to be completed or corrected prior to final payment. Failure to include an item on such list does not alter the responsibility of the Contractor to complete all Work in accordance with the Contract Documents.

§ 9.8.3 Upon receipt of the Contractor's list, the Architect will make an inspection to determine whether the Work or designated portion thereof is substantially complete. If the Architect's inspection discloses any item, whether or not included on the Contractor's list, which is not sufficiently complete in accordance with the Contract Documents so that the Owner can occupy or utilize the Work or designated portion thereof for its intended use, the Contractor shall, before issuance of the Certificate of Substantial Completion, complete or correct such item upon notification by the Architect. In such case, the Contractor shall then submit a request for another inspection by the Architect to determine Substantial Completion.

§ 9.8.4 When the Work or designated portion thereof is substantially complete, the Architect will prepare a Certificate of Substantial Completion that shall establish the date of Substantial Completion; establish responsibilities of the Owner and Contractor for security, maintenance, heat, utilities, damage to the Work and insurance; and fix the time within which the Contractor shall finish all items on the list accompanying the Certificate. Warranties required by the Contract Documents shall commence on the date of Substantial Completion of the Work or designated portion thereof unless otherwise provided in the Certificate of Substantial Completion.

§ 9.8.5 The Certificate of Substantial Completion shall be submitted to the Owner and Contractor for their written acceptance of responsibilities assigned to them in the Certificate. Upon such acceptance, and consent of surety if any, the Owner shall make payment of retainage applying to the Work or designated portion thereof. Such payment shall be adjusted for Work that is incomplete or not in accordance with the requirements of the Contract Documents.

§ 9.9 Partial Occupancy or Use
§ 9.9.1 The Owner may occupy or use any completed or partially completed portion of the Work at any stage when such portion is designated by separate agreement with the Contractor, provided such occupancy or use is consented to by the insurer and authorized by public authorities having jurisdiction over the Project. Such partial occupancy or use may commence whether or not the portion is substantially complete, provided the Owner and Contractor have accepted in writing the responsibilities assigned to each of them for payments, retainage, if any, security, maintenance, heat, utilities, damage to the Work and insurance, and have agreed in writing concerning the period for correction of the Work and commencement of warranties required by the Contract Documents. When the Contractor considers a portion substantially complete, the Contractor shall prepare and submit a list to the Architect as provided under Section 9.8.2. Consent of the Contractor to partial occupancy or use shall not be unreasonably withheld. The stage of the progress of the Work shall be determined by written agreement between the Owner and Contractor or, if no agreement is reached, by decision of the Architect.

§ 9.9.2 Immediately prior to such partial occupancy or use, the Owner, Contractor, and Architect shall jointly inspect the area to be occupied or portion of the Work to be used in order to determine and record the condition of the Work.

§ 9.9.3 Unless otherwise agreed upon, partial occupancy or use of a portion or portions of the Work shall not constitute acceptance of Work not complying with the requirements of the Contract Documents.

AIA Document A201 – 2017. Copyright © 1911, 1915, 1918, 1925, 1937, 1951, 1958, 1961, 1963, 1966, 1970, 1976, 1987, 1997, 2007 and 2017. All rights reserved. "The American Institute of Architects," "American Institute of Architects," "AIA," the AIA Logo, and "AIA Contract Documents" are trademarks of The American Institute of Architects. This document was produced at 20:31:18 EDT on 08/06/2026 under Subscription No.20250146710 which expires on 08/21/2026, is not for resale, is licensed for one-time use only, and may only be used in accordance with the AIA Contract Documents® Terms of Service. To report copyright violations, e-mail docinfo@aiacontracts.com.
User Notes: (6a74eee42a65beba85b6bb3c)

§ 9.10 Final Completion and Final Payment

§ 9.10.1 Upon receipt of the Contractor's notice that the Work is ready for final inspection and acceptance and upon receipt of a final Application for Payment, the Architect will promptly make such inspection. When the Architect finds the Work acceptable under the Contract Documents and the Contract fully performed, the Architect will promptly issue a final Certificate for Payment stating that to the best of the Architect's knowledge, information and belief, and on the basis of the Architect's on-site visits and inspections, the Work has been completed in accordance with the Contract Documents and that the entire balance found to be due the Contractor and noted in the final Certificate is due and payable. The Architect's final Certificate for Payment will constitute a further representation that conditions listed in Section 9.10.2 as precedent to the Contractor's being entitled to final payment have been fulfilled.

§ 9.10.2 Neither final payment nor any remaining retained percentage shall become due until the Contractor submits to the Architect (1) an affidavit that payrolls, bills for materials and equipment, and other indebtedness connected with the Work for which the Owner or the Owner's property might be responsible or encumbered (less amounts withheld by Owner) have been paid or otherwise satisfied, (2) a certificate evidencing that insurance required by the Contract Documents to remain in force after final payment is currently in effect, (3) a written statement that the Contractor knows of no reason that the insurance will not be renewable to cover the period required by the Contract Documents, (4) consent of surety, if any, to final payment, (5) documentation of any special warranties, such as manufacturers' warranties or specific Subcontractor warranties, and (6) if required by the Owner, other data establishing payment or satisfaction of obligations, such as receipts and releases and waivers of liens, claims, security interests, or encumbrances arising out of the Contract, to the extent and in such form as may be designated by the Owner. If a Subcontractor refuses to furnish a release or waiver required by the Owner, the Contractor may furnish a bond satisfactory to the Owner to indemnify the Owner against such lien, claim, security interest, or encumbrance. If a lien, claim, security interest, or encumbrance remains unsatisfied after payments are made, the Contractor shall refund to the Owner all money that the Owner may be compelled to pay in discharging the lien, claim, security interest, or encumbrance, including all costs and reasonable attorneys' fees.

§ 9.10.3 If, after Substantial Completion of the Work, final completion thereof is materially delayed through no fault of the Contractor or by issuance of Change Orders affecting final completion, and the Architect so confirms, the Owner shall, upon application by the Contractor and certification by the Architect, and without terminating the Contract, make payment of the balance due for that portion of the Work fully completed, corrected, and accepted. If the remaining balance for Work not fully completed or corrected is less than retainage stipulated in the Contract Documents, and if bonds have been furnished, the written consent of the surety to payment of the balance due for that portion of the Work fully completed and accepted shall be submitted by the Contractor to the Architect prior to certification of such payment. Such payment shall be made under terms and conditions governing final payment, except that it shall not constitute a waiver of Claims.

§ 9.10.4 The making of final payment shall constitute a waiver of Claims by the Owner except those arising from

- **.1** liens, Claims, security interests, or encumbrances arising out of the Contract and unsettled;
- **.2** failure of the Work to comply with the requirements of the Contract Documents;
- **.3** terms of special warranties required by the Contract Documents; or
- **.4** audits performed by the Owner, if permitted by the Contract Documents, after final payment.

§ 9.10.5 Acceptance of final payment by the Contractor, a Subcontractor, or a supplier, shall constitute a waiver of claims by that payee except those previously made in writing and identified by that payee as unsettled at the time of final Application for Payment.

ARTICLE 10 PROTECTION OF PERSONS AND PROPERTY

§ 10.1 Safety Precautions and Programs

The Contractor shall be responsible for initiating, maintaining, and supervising all safety precautions and programs in connection with the performance of the Contract.

§ 10.2 Safety of Persons and Property

§ 10.2.1 The Contractor shall take reasonable precautions for safety of, and shall provide reasonable protection to prevent damage, injury, or loss to

- **.1** employees on the Work and other persons who may be affected thereby;

AIA Document A201 – 2017. Copyright © 1911, 1915, 1918, 1925, 1937, 1951, 1958, 1961, 1963, 1966, 1970, 1976, 1987, 1997, 2007 and 2017. All rights reserved. "The American Institute of Architects," "American Institute of Architects," "AIA," the AIA Logo, and "AIA Contract Documents" are trademarks of The American Institute of Architects. This document was produced at 20:31:18 EDT on 08/06/2026 under Subscription No.20250146710 which expires on 08/21/2026, is not for resale, is licensed for one-time use only, and may only be used in accordance with the AIA Contract Documents® Terms of Service. To report copyright violations, e-mail docinfo@aiacontracts.com.
User Notes: (6a74eee42a65beba85b6bb3c)

.2 the Work and materials and equipment to be incorporated therein, whether in storage on or off the site, under care, custody, or control of the Contractor, a Subcontractor, or a Sub-subcontractor; and

.3 other property at the site or adjacent thereto, such as trees, shrubs, lawns, walks, pavements, roadways, structures, and utilities not designated for removal, relocation, or replacement in the course of construction.

§ 10.2.2 The Contractor shall comply with, and give notices required by applicable laws, statutes, ordinances, codes, rules and regulations, and lawful orders of public authorities, bearing on safety of persons or property or their protection from damage, injury, or loss.

§ 10.2.3 The Contractor shall implement, erect, and maintain, as required by existing conditions and performance of the Contract, reasonable safeguards for safety and protection, including posting danger signs and other warnings against hazards; promulgating safety regulations; and notifying the owners and users of adjacent sites and utilities of the safeguards.

§ 10.2.4 When use or storage of explosives or other hazardous materials or equipment, or unusual methods are necessary for execution of the Work, the Contractor shall exercise utmost care and carry on such activities under supervision of properly qualified personnel.

§ 10.2.5 The Contractor shall promptly remedy damage and loss (other than damage or loss insured under property insurance required by the Contract Documents) to property referred to in Sections 10.2.1.2 and 10.2.1.3 caused in whole or in part by the Contractor, a Subcontractor, a Sub-subcontractor, or anyone directly or indirectly employed by any of them, or by anyone for whose acts they may be liable and for which the Contractor is responsible under Sections 10.2.1.2 and 10.2.1.3. The Contractor may make a Claim for the cost to remedy the damage or loss to the extent such damage or loss is attributable to acts or omissions of the Owner or Architect or anyone directly or indirectly employed by either of them, or by anyone for whose acts either of them may be liable, and not attributable to the fault or negligence of the Contractor. The foregoing obligations of the Contractor are in addition to the Contractor's obligations under Section 3.18.

§ 10.2.6 The Contractor shall designate a responsible member of the Contractor's organization at the site whose duty shall be the prevention of accidents. This person shall be the Contractor's superintendent unless otherwise designated by the Contractor in writing to the Owner and Architect.

§ 10.2.7 The Contractor shall not permit any part of the construction or site to be loaded so as to cause damage or create an unsafe condition.

§ 10.2.8 Injury or Damage to Person or Property

If either party suffers injury or damage to person or property because of an act or omission of the other party, or of others for whose acts such party is legally responsible, notice of the injury or damage, whether or not insured, shall be given to the other party within a reasonable time not exceeding 21 days after discovery. The notice shall provide sufficient detail to enable the other party to investigate the matter.

§ 10.3 Hazardous Materials and Substances

§ 10.3.1 The Contractor is responsible for compliance with any requirements included in the Contract Documents regarding hazardous materials or substances. If the Contractor encounters a hazardous material or substance not addressed in the Contract Documents and if reasonable precautions will be inadequate to prevent foreseeable bodily injury or death to persons resulting from a material or substance, including but not limited to asbestos or polychlorinated biphenyl (PCB), encountered on the site by the Contractor, the Contractor shall, upon recognizing the condition, immediately stop Work in the affected area and notify the Owner and Architect of the condition.

§ 10.3.2 Upon receipt of the Contractor's notice, the Owner shall obtain the services of a licensed laboratory to verify the presence or absence of the material or substance reported by the Contractor and, in the event such material or substance is found to be present, to cause it to be rendered harmless. Unless otherwise required by the Contract Documents, the Owner shall furnish in writing to the Contractor and Architect the names and qualifications of persons or entities who are to perform tests verifying the presence or absence of the material or substance or who are to perform the task of removal or safe containment of the material or substance. The Contractor and the Architect will promptly reply to the Owner in writing stating whether or not either has reasonable objection to the persons or entities proposed by the Owner. If either the Contractor or Architect has an objection to a person or entity proposed

AIA Document A201 – 2017. Copyright © 1911, 1915, 1918, 1925, 1937, 1951, 1958, 1961, 1963, 1966, 1970, 1976, 1987, 1997, 2007 and 2017. All rights reserved. "The American Institute of Architects," "American Institute of Architects," "AIA," the AIA Logo, and "AIA Contract Documents" are trademarks of The American Institute of Architects. This document was produced at 20:31:18 EDT on 08/06/2026 under Subscription No.20250146710 which expires on 08/21/2026, is not for resale, is licensed for one-time use only, and may only be used in accordance with the AIA Contract Documents® Terms of Service. To report copyright violations, e-mail docinfo@aiacontracts.com.
User Notes: (6a74eee42a65beba85b6bb3c)

by the Owner, the Owner shall propose another to whom the Contractor and the Architect have no reasonable objection. When the material or substance has been rendered harmless, Work in the affected area shall resume upon written agreement of the Owner and Contractor. By Change Order, the Contract Time shall be extended appropriately and the Contract Sum shall be increased by the amount of the Contractor's reasonable additional costs of shutdown, delay, and start-up.

§ 10.3.3 To the fullest extent permitted by law, the Owner shall indemnify and hold harmless the Contractor, Subcontractors, Architect, Architect's consultants, and agents and employees of any of them from and against claims, damages, losses, and expenses, including but not limited to attorneys' fees, arising out of or resulting from performance of the Work in the affected area if in fact the material or substance presents the risk of bodily injury or death as described in Section 10.3.1 and has not been rendered harmless, provided that such claim, damage, loss, or expense is attributable to bodily injury, sickness, disease or death, or to injury to or destruction of tangible property (other than the Work itself), except to the extent that such damage, loss, or expense is due to the fault or negligence of the party seeking indemnity.

§ 10.3.4 The Owner shall not be responsible under this Section 10.3 for hazardous materials or substances the Contractor brings to the site unless such materials or substances are required by the Contract Documents. The Owner shall be responsible for hazardous materials or substances required by the Contract Documents, except to the extent of the Contractor's fault or negligence in the use and handling of such materials or substances.

§ 10.3.5 The Contractor shall reimburse the Owner for the cost and expense the Owner incurs (1) for remediation of hazardous materials or substances the Contractor brings to the site and negligently handles, or (2) where the Contractor fails to perform its obligations under Section 10.3.1, except to the extent that the cost and expense are due to the Owner's fault or negligence.

§ 10.3.6 If, without negligence on the part of the Contractor, the Contractor is held liable by a government agency for the cost of remediation of a hazardous material or substance solely by reason of performing Work as required by the Contract Documents, the Owner shall reimburse the Contractor for all cost and expense thereby incurred.

§ 10.4 Emergencies

In an emergency affecting safety of persons or property, the Contractor shall act, at the Contractor's discretion, to prevent threatened damage, injury, or loss. Additional compensation or extension of time claimed by the Contractor on account of an emergency shall be determined as provided in Article 15 and Article 7.

ARTICLE 11 INSURANCE AND BONDS

§ 11.1 Contractor's Insurance and Bonds

§ 11.1.1 The Contractor shall purchase and maintain insurance of the types and limits of liability, containing the endorsements, and subject to the terms and conditions, as described in the Agreement or elsewhere in the Contract Documents. The Contractor shall purchase and maintain the required insurance from an insurance company or insurance companies lawfully authorized to issue insurance in the jurisdiction where the Project is located. The Owner, Architect, and Architect's consultants shall be named as additional insureds under the Contractor's commercial general liability policy or as otherwise described in the Contract Documents.

§ 11.1.2 The Contractor shall provide surety bonds of the types, for such penal sums, and subject to such terms and conditions as required by the Contract Documents. The Contractor shall purchase and maintain the required bonds from a company or companies lawfully authorized to issue surety bonds in the jurisdiction where the Project is located.

§ 11.1.3 Upon the request of any person or entity appearing to be a potential beneficiary of bonds covering payment of obligations arising under the Contract, the Contractor shall promptly furnish a copy of the bonds or shall authorize a copy to be furnished.

§ 11.1.4 Notice of Cancellation or Expiration of Contractor's Required Insurance. Within three (3) business days of the date the Contractor becomes aware of an impending or actual cancellation or expiration of any insurance required by the Contract Documents, the Contractor shall provide notice to the Owner of such impending or actual cancellation or expiration. Upon receipt of notice from the Contractor, the Owner shall, unless the lapse in coverage arises from an act or omission of the Owner, have the right to stop the Work until the lapse in coverage has been cured by the procurement of replacement coverage by the Contractor. The furnishing of notice by the Contractor shall not relieve

AIA Document A201 – 2017. Copyright © 1911, 1915, 1918, 1925, 1937, 1951, 1958, 1961, 1963, 1966, 1970, 1976, 1987, 1997, 2007 and 2017. All rights reserved. "The American Institute of Architects," "American Institute of Architects," "AIA," the AIA Logo, and "AIA Contract Documents" are trademarks of The American Institute of Architects. This document was produced at 20:31:18 EDT on 08/06/2026 under Subscription No.20250146710 which expires on 08/21/2026, is not for resale, is licensed for one-time use only, and may only be used in accordance with the AIA Contract Documents® Terms of Service. To report copyright violations, e-mail docinfo@aiacontracts.com.
User Notes: (6a74eee42a65beba85b6bb3c)

the Contractor of any contractual obligation to provide any required coverage.

§ 11.2 Owner's Insurance

§ 11.2.1 The Owner shall purchase and maintain insurance of the types and limits of liability, containing the endorsements, and subject to the terms and conditions, as described in the Agreement or elsewhere in the Contract Documents. The Owner shall purchase and maintain the required insurance from an insurance company or insurance companies lawfully authorized to issue insurance in the jurisdiction where the Project is located.

§ 11.2.2 Failure to Purchase Required Property Insurance. If the Owner fails to purchase and maintain the required property insurance, with all of the coverages and in the amounts described in the Agreement or elsewhere in the Contract Documents, the Owner shall inform the Contractor in writing prior to commencement of the Work. Upon receipt of notice from the Owner, the Contractor may delay commencement of the Work and may obtain insurance that will protect the interests of the Contractor, Subcontractors, and Sub-Subcontractors in the Work. When the failure to provide coverage has been cured or resolved, the Contract Sum and Contract Time shall be equitably adjusted. In the event the Owner fails to procure coverage, the Owner waives all rights against the Contractor, Subcontractors, and Sub-subcontractors to the extent the loss to the Owner would have been covered by the insurance to have been procured by the Owner. The cost of the insurance shall be charged to the Owner by a Change Order. If the Owner does not provide written notice, and the Contractor is damaged by the failure or neglect of the Owner to purchase or maintain the required insurance, the Owner shall reimburse the Contractor for all reasonable costs and damages attributable thereto.

§ 11.2.3 Notice of Cancellation or Expiration of Owner's Required Property Insurance. Within three (3) business days of the date the Owner becomes aware of an impending or actual cancellation or expiration of any property insurance required by the Contract Documents, the Owner shall provide notice to the Contractor of such impending or actual cancellation or expiration. Unless the lapse in coverage arises from an act or omission of the Contractor: (1) the Contractor, upon receipt of notice from the Owner, shall have the right to stop the Work until the lapse in coverage has been cured by the procurement of replacement coverage by either the Owner or the Contractor; (2) the Contract Time and Contract Sum shall be equitably adjusted; and (3) the Owner waives all rights against the Contractor, Subcontractors, and Sub-subcontractors to the extent any loss to the Owner would have been covered by the insurance had it not expired or been cancelled. If the Contractor purchases replacement coverage, the cost of the insurance shall be charged to the Owner by an appropriate Change Order. The furnishing of notice by the Owner shall not relieve the Owner of any contractual obligation to provide required insurance.

§ 11.3 Waivers of Subrogation

§ 11.3.1 The Owner and Contractor waive all rights against (1) each other and any of their subcontractors, sub-subcontractors, agents, and employees, each of the other; (2) the Architect and Architect's consultants; and (3) Separate Contractors, if any, and any of their subcontractors, sub-subcontractors, agents, and employees, for damages caused by fire, or other causes of loss, to the extent those losses are covered by property insurance required by the Agreement or other property insurance applicable to the Project, except such rights as they have to proceeds of such insurance. The Owner or Contractor, as appropriate, shall require similar written waivers in favor of the individuals and entities identified above from the Architect, Architect's consultants, Separate Contractors, subcontractors, and sub-subcontractors. The policies of insurance purchased and maintained by each person or entity agreeing to waive claims pursuant to this section 11.3.1 shall not prohibit this waiver of subrogation. This waiver of subrogation shall be effective as to a person or entity (1) even though that person or entity would otherwise have a duty of indemnification, contractual or otherwise, (2) even though that person or entity did not pay the insurance premium directly or indirectly, or (3) whether or not the person or entity had an insurable interest in the damaged property.

§ 11.3.2 If during the Project construction period the Owner insures properties, real or personal or both, at or adjacent to the site by property insurance under policies separate from those insuring the Project, or if after final payment property insurance is to be provided on the completed Project through a policy or policies other than those insuring the Project during the construction period, to the extent permissible by such policies, the Owner waives all rights in accordance with the terms of Section 11.3.1 for damages caused by fire or other causes of loss covered by this separate property insurance.

§ 11.4 Loss of Use, Business Interruption, and Delay in Completion Insurance

The Owner, at the Owner's option, may purchase and maintain insurance that will protect the Owner against loss of use of the Owner's property, or the inability to conduct normal operations, due to fire or other causes of loss. The Owner waives all rights of action against the Contractor and Architect for loss of use of the Owner's property, due to

AIA Document A201 – 2017. Copyright © 1911, 1915, 1918, 1925, 1937, 1951, 1958, 1961, 1963, 1966, 1970, 1976, 1987, 1997, 2007 and 2017. All rights reserved. "The American Institute of Architects," "American Institute of Architects," "AIA," the AIA Logo, and "AIA Contract Documents" are trademarks of The American Institute of Architects. This document was produced at 20:31:18 EDT on 08/06/2026 under Subscription No.20250146710 which expires on 08/21/2026, is not for resale, is licensed for one-time use only, and may only be used in accordance with the AIA Contract Documents® Terms of Service. To report copyright violations, e-mail docinfo@aiacontracts.com.
User Notes: (6a74eee42a65beba85b6bb3c)

fire or other hazards however caused.

§11.5 Adjustment and Settlement of Insured Loss

§ 11.5.1 A loss insured under the property insurance required by the Agreement shall be adjusted by the Owner as fiduciary and made payable to the Owner as fiduciary for the insureds, as their interests may appear, subject to requirements of any applicable mortgagee clause and of Section 11.5.2. The Owner shall pay the Architect and Contractor their just shares of insurance proceeds received by the Owner, and by appropriate agreements the Architect and Contractor shall make payments to their consultants and Subcontractors in similar manner.

§ 11.5.2 Prior to settlement of an insured loss, the Owner shall notify the Contractor of the terms of the proposed settlement as well as the proposed allocation of the insurance proceeds. The Contractor shall have 14 days from receipt of notice to object to the proposed settlement or allocation of the proceeds. If the Contractor does not object, the Owner shall settle the loss and the Contractor shall be bound by the settlement and allocation. Upon receipt, the Owner shall deposit the insurance proceeds in a separate account and make the appropriate distributions. Thereafter, if no other agreement is made or the Owner does not terminate the Contract for convenience, the Owner and Contractor shall execute a Change Order for reconstruction of the damaged or destroyed Work in the amount allocated for that purpose. If the Contractor timely objects to either the terms of the proposed settlement or the allocation of the proceeds, the Owner may proceed to settle the insured loss, and any dispute between the Owner and Contractor arising out of the settlement or allocation of the proceeds shall be resolved pursuant to Article 15. Pending resolution of any dispute, the Owner may issue a Construction Change Directive for the reconstruction of the damaged or destroyed Work.

ARTICLE 12 UNCOVERING AND CORRECTION OF WORK

§ 12.1 Uncovering of Work

§ 12.1.1 If a portion of the Work is covered contrary to the Architect's request or to requirements specifically expressed in the Contract Documents, it must, if requested in writing by the Architect, be uncovered for the Architect's examination and be replaced at the Contractor's expense without change in the Contract Time.

§ 12.1.2 If a portion of the Work has been covered that the Architect has not specifically requested to examine prior to its being covered, the Architect may request to see such Work and it shall be uncovered by the Contractor. If such Work is in accordance with the Contract Documents, the Contractor shall be entitled to an equitable adjustment to the Contract Sum and Contract Time as may be appropriate. If such Work is not in accordance with the Contract Documents, the costs of uncovering the Work, and the cost of correction, shall be at the Contractor's expense.

§ 12.2 Correction of Work

§ 12.2.1 Before Substantial Completion

The Contractor shall promptly correct Work rejected by the Architect or failing to conform to the requirements of the Contract Documents, discovered before Substantial Completion and whether or not fabricated, installed or completed. Costs of correcting such rejected Work, including additional testing and inspections, the cost of uncovering and replacement, and compensation for the Architect's services and expenses made necessary thereby, shall be at the Contractor's expense.

§ 12.2.2 After Substantial Completion

§ 12.2.2.1 In addition to the Contractor's obligations under Section 3.5, if, within one year after the date of Substantial Completion of the Work or designated portion thereof or after the date for commencement of warranties established under Section 9.9.1, or by terms of any applicable special warranty required by the Contract Documents, any of the Work is found to be not in accordance with the requirements of the Contract Documents, the Contractor shall correct it promptly after receipt of notice from the Owner to do so, unless the Owner has previously given the Contractor a written acceptance of such condition. The Owner shall give such notice promptly after discovery of the condition. During the one-year period for correction of Work, if the Owner fails to notify the Contractor and give the Contractor an opportunity to make the correction, the Owner waives the rights to require correction by the Contractor and to make a claim for breach of warranty. If the Contractor fails to correct nonconforming Work within a reasonable time during that period after receipt of notice from the Owner or Architect, the Owner may correct it in accordance with Section 2.5.

§ 12.2.2.2 The one-year period for correction of Work shall be extended with respect to portions of Work first performed after Substantial Completion by the period of time between Substantial Completion and the actual completion of that portion of the Work.

AIA Document A201 – 2017. Copyright © 1911, 1915, 1918, 1925, 1937, 1951, 1958, 1961, 1963, 1966, 1970, 1976, 1987, 1997, 2007 and 2017. All rights reserved. "The American Institute of Architects," "American Institute of Architects," "AIA," the AIA Logo, and "AIA Contract Documents" are trademarks of The American Institute of Architects. This document was produced at 20:31:18 EDT on 08/06/2026 under Subscription No.20250146710 which expires on 08/21/2026, is not for resale, is licensed for one-time use only, and may only be used in accordance with the AIA Contract Documents® Terms of Service. To report copyright violations, e-mail docinfo@aiacontracts.com.
User Notes: (6a74eee42a65beba85b6bb3c)

§ 12.2.2.3 The one-year period for correction of Work shall not be extended by corrective Work performed by the Contractor pursuant to this Section 12.2.

§ 12.2.3 The Contractor shall remove from the site portions of the Work that are not in accordance with the requirements of the Contract Documents and are neither corrected by the Contractor nor accepted by the Owner.

§ 12.2.4 The Contractor shall bear the cost of correcting destroyed or damaged construction of the Owner or Separate Contractors, whether completed or partially completed, caused by the Contractor's correction or removal of Work that is not in accordance with the requirements of the Contract Documents.

§ 12.2.5 Nothing contained in this Section 12.2 shall be construed to establish a period of limitation with respect to other obligations the Contractor has under the Contract Documents. Establishment of the one-year period for correction of Work as described in Section 12.2.2 relates only to the specific obligation of the Contractor to correct the Work, and has no relationship to the time within which the obligation to comply with the Contract Documents may be sought to be enforced, nor to the time within which proceedings may be commenced to establish the Contractor's liability with respect to the Contractor's obligations other than specifically to correct the Work.

§ 12.3 Acceptance of Nonconforming Work

If the Owner prefers to accept Work that is not in accordance with the requirements of the Contract Documents, the Owner may do so instead of requiring its removal and correction, in which case the Contract Sum will be reduced as appropriate and equitable. Such adjustment shall be effected whether or not final payment has been made.

ARTICLE 13 MISCELLANEOUS PROVISIONS

§ 13.1 Governing Law

The Contract shall be governed by the law of the place where the Project is located, excluding that jurisdiction's choice of law rules. If the parties have selected arbitration as the method of binding dispute resolution, the Federal Arbitration Act shall govern Section 15.4.

§ 13.2 Successors and Assigns

§ 13.2.1 The Owner and Contractor respectively bind themselves, their partners, successors, assigns, and legal representatives to covenants, agreements, and obligations contained in the Contract Documents. Except as provided in Section 13.2.2, neither party to the Contract shall assign the Contract as a whole without written consent of the other. If either party attempts to make an assignment without such consent, that party shall nevertheless remain legally responsible for all obligations under the Contract.

§ 13.2.2 The Owner may, without consent of the Contractor, assign the Contract to a lender providing construction financing for the Project, if the lender assumes the Owner's rights and obligations under the Contract Documents. The Contractor shall execute all consents reasonably required to facilitate the assignment.

§ 13.3 Rights and Remedies

§ 13.3.1 Duties and obligations imposed by the Contract Documents and rights and remedies available thereunder shall be in addition to and not a limitation of duties, obligations, rights, and remedies otherwise imposed or available by law.

§ 13.3.2 No action or failure to act by the Owner, Architect, or Contractor shall constitute a waiver of a right or duty afforded them under the Contract, nor shall such action or failure to act constitute approval of or acquiescence in a breach thereunder, except as may be specifically agreed upon in writing.

§ 13.4 Tests and Inspections

§ 13.4.1 Tests, inspections, and approvals of portions of the Work shall be made as required by the Contract Documents and by applicable laws, statutes, ordinances, codes, rules, and regulations or lawful orders of public authorities. Unless otherwise provided, the Contractor shall make arrangements for such tests, inspections, and approvals with an independent testing laboratory or entity acceptable to the Owner, or with the appropriate public authority, and shall bear all related costs of tests, inspections, and approvals. The Contractor shall give the Architect timely notice of when and where tests and inspections are to be made so that the Architect may be present for such procedures. The Owner shall bear costs of tests, inspections, or approvals that do not become requirements until after bids are received or negotiations concluded. The Owner shall directly arrange and pay for tests, inspections, or

AIA Document A201 – 2017. Copyright © 1911, 1915, 1918, 1925, 1937, 1951, 1958, 1961, 1963, 1966, 1970, 1976, 1987, 1997, 2007 and 2017. All rights reserved. "The American Institute of Architects," "American Institute of Architects," "AIA," the AIA Logo, and "AIA Contract Documents" are trademarks of The American Institute of Architects. This document was produced at 20:31:18 EDT on 08/06/2026 under Subscription No.20250146710 which expires on 08/21/2026, is not for resale, is licensed for one-time use only, and may only be used in accordance with the AIA Contract Documents® Terms of Service. To report copyright violations, e-mail docinfo@aiacontracts.com.
User Notes: (6a74eee42a65beba85b6bb3c)

approvals where building codes or applicable laws or regulations so require.

§ 13.4.2 If the Architect, Owner, or public authorities having jurisdiction determine that portions of the Work require additional testing, inspection, or approval not included under Section 13.4.1, the Architect will, upon written authorization from the Owner, instruct the Contractor to make arrangements for such additional testing, inspection, or approval, by an entity acceptable to the Owner, and the Contractor shall give timely notice to the Architect of when and where tests and inspections are to be made so that the Architect may be present for such procedures. Such costs, except as provided in Section 13.4.3, shall be at the Owner's expense.

§ 13.4.3 If procedures for testing, inspection, or approval under Sections 13.4.1 and 13.4.2 reveal failure of the portions of the Work to comply with requirements established by the Contract Documents, all costs made necessary by such failure, including those of repeated procedures and compensation for the Architect's services and expenses, shall be at the Contractor's expense.

§ 13.4.4 Required certificates of testing, inspection, or approval shall, unless otherwise required by the Contract Documents, be secured by the Contractor and promptly delivered to the Architect.

§ 13.4.5 If the Architect is to observe tests, inspections, or approvals required by the Contract Documents, the Architect will do so promptly and, where practicable, at the normal place of testing.

§ 13.4.6 Tests or inspections conducted pursuant to the Contract Documents shall be made promptly to avoid unreasonable delay in the Work.

§ 13.5 Interest

Payments due and unpaid under the Contract Documents shall bear interest from the date payment is due at the rate the parties agree upon in writing or, in the absence thereof, at the legal rate prevailing from time to time at the place where the Project is located.

ARTICLE 14 TERMINATION OR SUSPENSION OF THE CONTRACT

§ 14.1 Termination by the Contractor

§ 14.1.1 The Contractor may terminate the Contract if the Work is stopped for a period of 30 consecutive days through no act or fault of the Contractor, a Subcontractor, a Sub-subcontractor, their agents or employees, or any other persons or entities performing portions of the Work, for any of the following reasons:

- **.1** Issuance of an order of a court or other public authority having jurisdiction that requires all Work to be stopped;
- **.2** An act of government, such as a declaration of national emergency, that requires all Work to be stopped;
- **.3** Because the Architect has not issued a Certificate for Payment and has not notified the Contractor of the reason for withholding certification as provided in Section 9.4.1, or because the Owner has not made payment on a Certificate for Payment within the time stated in the Contract Documents; or
- **.4** The Owner has failed to furnish to the Contractor reasonable evidence as required by Section 2.2.

§ 14.1.2 The Contractor may terminate the Contract if, through no act or fault of the Contractor, a Subcontractor, a Sub-subcontractor, their agents or employees, or any other persons or entities performing portions of the Work, repeated suspensions, delays, or interruptions of the entire Work by the Owner as described in Section 14.3, constitute in the aggregate more than 100 percent of the total number of days scheduled for completion, or 120 days in any 365-day period, whichever is less.

§ 14.1.3 If one of the reasons described in Section 14.1.1 or 14.1.2 exists, the Contractor may, upon seven days' notice to the Owner and Architect, terminate the Contract and recover from the Owner payment for Work executed, as well as reasonable overhead and profit on Work not executed, and costs incurred by reason of such termination.

§ 14.1.4 If the Work is stopped for a period of 60 consecutive days through no act or fault of the Contractor, a Subcontractor, a Sub-subcontractor, or their agents or employees or any other persons or entities performing portions of the Work because the Owner has repeatedly failed to fulfill the Owner's obligations under the Contract Documents with respect to matters important to the progress of the Work, the Contractor may, upon seven additional days' notice to the Owner and the Architect, terminate the Contract and recover from the Owner as provided in

AIA Document A201 – 2017. Copyright © 1911, 1915, 1918, 1925, 1937, 1951, 1958, 1961, 1963, 1966, 1970, 1976, 1987, 1997, 2007 and 2017. All rights reserved. "The American Institute of Architects," "American Institute of Architects," "AIA," the AIA Logo, and "AIA Contract Documents" are trademarks of The American Institute of Architects. This document was produced at 20:31:18 EDT on 08/06/2026 under Subscription No.20250146710 which expires on 08/21/2026, is not for resale, is licensed for one-time use only, and may only be used in accordance with the AIA Contract Documents® Terms of Service. To report copyright violations, e-mail docinfo@aiacontracts.com.
User Notes: (6a74eee42a65beba85b6bb3c)

Section 14.1.3.

§ 14.2 Termination by the Owner for Cause

§ 14.2.1 The Owner may terminate the Contract if the Contractor

- **.1** repeatedly refuses or fails to supply enough properly skilled workers or proper materials;
- **.2** fails to make payment to Subcontractors or suppliers in accordance with the respective agreements between the Contractor and the Subcontractors or suppliers;
- **.3** repeatedly disregards applicable laws, statutes, ordinances, codes, rules and regulations, or lawful orders of a public authority; or
- **.4** otherwise is guilty of substantial breach of a provision of the Contract Documents.

§ 14.2.2 When any of the reasons described in Section 14.2.1 exist, and upon certification by the Architect that sufficient cause exists to justify such action, the Owner may, without prejudice to any other rights or remedies of the Owner and after giving the Contractor and the Contractor's surety, if any, seven days' notice, terminate employment of the Contractor and may, subject to any prior rights of the surety:

- **.1** Exclude the Contractor from the site and take possession of all materials, equipment, tools, and construction equipment and machinery thereon owned by the Contractor;
- **.2** Accept assignment of subcontracts pursuant to Section 5.4; and
- **.3** Finish the Work by whatever reasonable method the Owner may deem expedient. Upon written request of the Contractor, the Owner shall furnish to the Contractor a detailed accounting of the costs incurred by the Owner in finishing the Work.

§ 14.2.3 When the Owner terminates the Contract for one of the reasons stated in Section 14.2.1, the Contractor shall not be entitled to receive further payment until the Work is finished.

§ 14.2.4 If the unpaid balance of the Contract Sum exceeds costs of finishing the Work, including compensation for the Architect's services and expenses made necessary thereby, and other damages incurred by the Owner and not expressly waived, such excess shall be paid to the Contractor. If such costs and damages exceed the unpaid balance, the Contractor shall pay the difference to the Owner. The amount to be paid to the Contractor or Owner, as the case may be, shall be certified by the Initial Decision Maker, upon application, and this obligation for payment shall survive termination of the Contract.

§ 14.3 Suspension by the Owner for Convenience

§ 14.3.1 The Owner may, without cause, order the Contractor in writing to suspend, delay or interrupt the Work, in whole or in part for such period of time as the Owner may determine.

§ 14.3.2 The Contract Sum and Contract Time shall be adjusted for increases in the cost and time caused by suspension, delay, or interruption under Section 14.3.1. Adjustment of the Contract Sum shall include profit. No adjustment shall be made to the extent

- **.1** that performance is, was, or would have been, so suspended, delayed, or interrupted, by another cause for which the Contractor is responsible; or
- **.2** that an equitable adjustment is made or denied under another provision of the Contract.

§ 14.4 Termination by the Owner for Convenience

§ 14.4.1 The Owner may, at any time, terminate the Contract for the Owner's convenience and without cause.

§ 14.4.2 Upon receipt of notice from the Owner of such termination for the Owner's convenience, the Contractor shall

- **.1** cease operations as directed by the Owner in the notice;
- **.2** take actions necessary, or that the Owner may direct, for the protection and preservation of the Work; and
- **.3** except for Work directed to be performed prior to the effective date of termination stated in the notice, terminate all existing subcontracts and purchase orders and enter into no further subcontracts and purchase orders.

AIA Document A201 – 2017. Copyright © 1911, 1915, 1918, 1925, 1937, 1951, 1958, 1961, 1963, 1966, 1970, 1976, 1987, 1997, 2007 and 2017. All rights reserved. "The American Institute of Architects," "American Institute of Architects," "AIA," the AIA Logo, and "AIA Contract Documents" are trademarks of The American Institute of Architects. This document was produced at 20:31:18 EDT on 08/06/2026 under Subscription No.20250146710 which expires on 08/21/2026, is not for resale, is licensed for one-time use only, and may only be used in accordance with the AIA Contract Documents® Terms of Service. To report copyright violations, e-mail docinfo@aiacontracts.com.
User Notes: (6a74eee42a65beba85b6bb3c)

§ 14.4.3 In case of such termination for the Owner's convenience, the Owner shall pay the Contractor for Work properly executed; costs incurred by reason of the termination, including costs attributable to termination of Subcontracts; and the termination fee, if any, set forth in the Agreement.

ARTICLE 15 CLAIMS AND DISPUTES

§ 15.1 Claims

§ 15.1.1 Definition

A Claim is a demand or assertion by one of the parties seeking, as a matter of right, payment of money, a change in the Contract Time, or other relief with respect to the terms of the Contract. The term "Claim" also includes other disputes and matters in question between the Owner and Contractor arising out of or relating to the Contract. The responsibility to substantiate Claims shall rest with the party making the Claim. This Section 15.1.1 does not require the Owner to file a Claim in order to impose liquidated damages in accordance with the Contract Documents.

§ 15.1.2 Time Limits on Claims

The Owner and Contractor shall commence all Claims and causes of action against the other and arising out of or related to the Contract, whether in contract, tort, breach of warranty or otherwise, in accordance with the requirements of the binding dispute resolution method selected in the Agreement and within the period specified by applicable law, but in any case not more than 10 years after the date of Substantial Completion of the Work. The Owner and Contractor waive all Claims and causes of action not commenced in accordance with this Section 15.1.2.

§ 15.1.3 Notice of Claims

§ 15.1.3.1 Claims by either the Owner or Contractor, where the condition giving rise to the Claim is first discovered prior to expiration of the period for correction of the Work set forth in Section 12.2.2, shall be initiated by notice to the other party and to the Initial Decision Maker with a copy sent to the Architect, if the Architect is not serving as the Initial Decision Maker. Claims by either party under this Section 15.1.3.1 shall be initiated within 21 days after occurrence of the event giving rise to such Claim or within 21 days after the claimant first recognizes the condition giving rise to the Claim, whichever is later.

§ 15.1.3.2 Claims by either the Owner or Contractor, where the condition giving rise to the Claim is first discovered after expiration of the period for correction of the Work set forth in Section 12.2.2, shall be initiated by notice to the other party. In such event, no decision by the Initial Decision Maker is required.

§ 15.1.4 Continuing Contract Performance

§ 15.1.4.1 Pending final resolution of a Claim, except as otherwise agreed in writing or as provided in Section 9.7 and Article 14, the Contractor shall proceed diligently with performance of the Contract and the Owner shall continue to make payments in accordance with the Contract Documents.

§ 15.1.4.2 The Contract Sum and Contract Time shall be adjusted in accordance with the Initial Decision Maker's decision, subject to the right of either party to proceed in accordance with this Article 15. The Architect will issue Certificates for Payment in accordance with the decision of the Initial Decision Maker.

§ 15.1.5 Claims for Additional Cost

If the Contractor wishes to make a Claim for an increase in the Contract Sum, notice as provided in Section 15.1.3 shall be given before proceeding to execute the portion of the Work that is the subject of the Claim. Prior notice is not required for Claims relating to an emergency endangering life or property arising under Section 10.4.

§ 15.1.6 Claims for Additional Time

§ 15.1.6.1 If the Contractor wishes to make a Claim for an increase in the Contract Time, notice as provided in Section 15.1.3 shall be given. The Contractor's Claim shall include an estimate of cost and of probable effect of delay on progress of the Work. In the case of a continuing delay, only one Claim is necessary.

§ 15.1.6.2 If adverse weather conditions are the basis for a Claim for additional time, such Claim shall be documented by data substantiating that weather conditions were abnormal for the period of time, could not have been reasonably anticipated, and had an adverse effect on the scheduled construction.

§ 15.1.7 Waiver of Claims for Consequential Damages

The Contractor and Owner waive Claims against each other for consequential damages arising out of or relating to this Contract. This mutual waiver includes

AIA Document A201 – 2017. Copyright © 1911, 1915, 1918, 1925, 1937, 1951, 1958, 1961, 1963, 1966, 1970, 1976, 1987, 1997, 2007 and 2017. All rights reserved. "The American Institute of Architects," "American Institute of Architects," "AIA," the AIA Logo, and "AIA Contract Documents" are trademarks of The American Institute of Architects. This document was produced at 20:31:18 EDT on 08/06/2026 under Subscription No.20250146710 which expires on 08/21/2026, is not for resale, is licensed for one-time use only, and may only be used in accordance with the AIA Contract Documents® Terms of Service. To report copyright violations, e-mail docinfo@aiacontracts.com.
User Notes: (6a74eee42a65beba85b6bb3c)

.1 damages incurred by the Owner for rental expenses, for losses of use, income, profit, financing, business and reputation, and for loss of management or employee productivity or of the services of such persons; and

.2 damages incurred by the Contractor for principal office expenses including the compensation of personnel stationed there, for losses of financing, business and reputation, and for loss of profit, except anticipated profit arising directly from the Work.

This mutual waiver is applicable, without limitation, to all consequential damages due to either party's termination in accordance with Article 14. Nothing contained in this Section 15.1.7 shall be deemed to preclude assessment of liquidated damages, when applicable, in accordance with the requirements of the Contract Documents.

§ 15.2 Initial Decision

§ 15.2.1 Claims, excluding those where the condition giving rise to the Claim is first discovered after expiration of the period for correction of the Work set forth in Section 12.2.2 or arising under Sections 10.3, 10.4, and 11.5, shall be referred to the Initial Decision Maker for initial decision. The Architect will serve as the Initial Decision Maker, unless otherwise indicated in the Agreement. Except for those Claims excluded by this Section 15.2.1, an initial decision shall be required as a condition precedent to mediation of any Claim. If an initial decision has not been rendered within 30 days after the Claim has been referred to the Initial Decision Maker, the party asserting the Claim may demand mediation and binding dispute resolution without a decision having been rendered. Unless the Initial Decision Maker and all affected parties agree, the Initial Decision Maker will not decide disputes between the Contractor and persons or entities other than the Owner.

§ 15.2.2 The Initial Decision Maker will review Claims and within ten days of the receipt of a Claim take one or more of the following actions: (1) request additional supporting data from the claimant or a response with supporting data from the other party, (2) reject the Claim in whole or in part, (3) approve the Claim, (4) suggest a compromise, or (5) advise the parties that the Initial Decision Maker is unable to resolve the Claim if the Initial Decision Maker lacks sufficient information to evaluate the merits of the Claim or if the Initial Decision Maker concludes that, in the Initial Decision Maker's sole discretion, it would be inappropriate for the Initial Decision Maker to resolve the Claim.

§ 15.2.3 In evaluating Claims, the Initial Decision Maker may, but shall not be obligated to, consult with or seek information from either party or from persons with special knowledge or expertise who may assist the Initial Decision Maker in rendering a decision. The Initial Decision Maker may request the Owner to authorize retention of such persons at the Owner's expense.

§ 15.2.4 If the Initial Decision Maker requests a party to provide a response to a Claim or to furnish additional supporting data, such party shall respond, within ten days after receipt of the request, and shall either (1) provide a response on the requested supporting data, (2) advise the Initial Decision Maker when the response or supporting data will be furnished, or (3) advise the Initial Decision Maker that no supporting data will be furnished. Upon receipt of the response or supporting data, if any, the Initial Decision Maker will either reject or approve the Claim in whole or in part.

§ 15.2.5 The Initial Decision Maker will render an initial decision approving or rejecting the Claim, or indicating that the Initial Decision Maker is unable to resolve the Claim. This initial decision shall (1) be in writing; (2) state the reasons therefor; and (3) notify the parties and the Architect, if the Architect is not serving as the Initial Decision Maker, of any change in the Contract Sum or Contract Time or both. The initial decision shall be final and binding on the parties but subject to mediation and, if the parties fail to resolve their dispute through mediation, to binding dispute resolution.

§ 15.2.6 Either party may file for mediation of an initial decision at any time, subject to the terms of Section 15.2.6.1.

§ 15.2.6.1 Either party may, within 30 days from the date of receipt of an initial decision, demand in writing that the other party file for mediation. If such a demand is made and the party receiving the demand fails to file for mediation within 30 days after receipt thereof, then both parties waive their rights to mediate or pursue binding dispute resolution proceedings with respect to the initial decision.

§ 15.2.7 In the event of a Claim against the Contractor, the Owner may, but is not obligated to, notify the surety, if any, of the nature and amount of the Claim. If the Claim relates to a possibility of a Contractor's default, the Owner

AIA Document A201 – 2017. Copyright © 1911, 1915, 1918, 1925, 1937, 1951, 1958, 1961, 1963, 1966, 1970, 1976, 1987, 1997, 2007 and 2017. All rights reserved. "The American Institute of Architects," "American Institute of Architects," "AIA," the AIA Logo, and "AIA Contract Documents" are trademarks of The American Institute of Architects. This document was produced at 20:31:18 EDT on 08/06/2026 under Subscription No.20250146710 which expires on 08/21/2026, is not for resale, is licensed for one-time use only, and may only be used in accordance with the AIA Contract Documents® Terms of Service. To report copyright violations, e-mail docinfo@aiacontracts.com.
User Notes: (6a74eee42a65beba85b6bb3c)

may, but is not obligated to, notify the surety and request the surety's assistance in resolving the controversy.

§ 15.2.8 If a Claim relates to or is the subject of a mechanic's lien, the party asserting such Claim may proceed in accordance with applicable law to comply with the lien notice or filing deadlines.

§ 15.3 Mediation

§ 15.3.1 Claims, disputes, or other matters in controversy arising out of or related to the Contract, except those waived as provided for in Sections 9.10.4, 9.10.5, and 15.1.7, shall be subject to mediation as a condition precedent to binding dispute resolution.

§ 15.3.2 The parties shall endeavor to resolve their Claims by mediation which, unless the parties mutually agree otherwise, shall be administered by the American Arbitration Association in accordance with its Construction Industry Mediation Procedures in effect on the date of the Agreement. A request for mediation shall be made in writing, delivered to the other party to the Contract, and filed with the person or entity administering the mediation. The request may be made concurrently with the filing of binding dispute resolution proceedings but, in such event, mediation shall proceed in advance of binding dispute resolution proceedings, which shall be stayed pending mediation for a period of 60 days from the date of filing, unless stayed for a longer period by agreement of the parties or court order. If an arbitration is stayed pursuant to this Section 15.3.2, the parties may nonetheless proceed to the selection of the arbitrator(s) and agree upon a schedule for later proceedings.

§ 15.3.3 Either party may, within 30 days from the date that mediation has been concluded without resolution of the dispute or 60 days after mediation has been demanded without resolution of the dispute, demand in writing that the other party file for binding dispute resolution. If such a demand is made and the party receiving the demand fails to file for binding dispute resolution within 60 days after receipt thereof, then both parties waive their rights to binding dispute resolution proceedings with respect to the initial decision.

§ 15.3.4 The parties shall share the mediator's fee and any filing fees equally. The mediation shall be held in the place where the Project is located, unless another location is mutually agreed upon. Agreements reached in mediation shall be enforceable as settlement agreements in any court having jurisdiction thereof.

§ 15.4 Arbitration

§ 15.4.1 If the parties have selected arbitration as the method for binding dispute resolution in the Agreement, any Claim subject to, but not resolved by, mediation shall be subject to arbitration which, unless the parties mutually agree otherwise, shall be administered by the American Arbitration Association in accordance with its Construction Industry Arbitration Rules in effect on the date of the Agreement. The Arbitration shall be conducted in the place where the Project is located, unless another location is mutually agreed upon. A demand for arbitration shall be made in writing, delivered to the other party to the Contract, and filed with the person or entity administering the arbitration. The party filing a notice of demand for arbitration must assert in the demand all Claims then known to that party on which arbitration is permitted to be demanded.

§ 15.4.1.1 A demand for arbitration shall be made no earlier than concurrently with the filing of a request for mediation, but in no event shall it be made after the date when the institution of legal or equitable proceedings based on the Claim would be barred by the applicable statute of limitations. For statute of limitations purposes, receipt of a written demand for arbitration by the person or entity administering the arbitration shall constitute the institution of legal or equitable proceedings based on the Claim.

§ 15.4.2 The award rendered by the arbitrator or arbitrators shall be final, and judgment may be entered upon it in accordance with applicable law in any court having jurisdiction thereof.

§ 15.4.3 The foregoing agreement to arbitrate and other agreements to arbitrate with an additional person or entity duly consented to by parties to the Agreement, shall be specifically enforceable under applicable law in any court having jurisdiction thereof.

§ 15.4.4 Consolidation or Joinder

§ 15.4.4.1 Subject to the rules of the American Arbitration Association or other applicable arbitration rules, either party may consolidate an arbitration conducted under this Agreement with any other arbitration to which it is a party provided that (1) the arbitration agreement governing the other arbitration permits consolidation, (2) the arbitrations to be consolidated substantially involve common questions of law or fact, and (3) the arbitrations employ materially

AIA Document A201 – 2017. Copyright © 1911, 1915, 1918, 1925, 1937, 1951, 1958, 1961, 1963, 1966, 1970, 1976, 1987, 1997, 2007 and 2017. All rights reserved. "The American Institute of Architects," "American Institute of Architects," "AIA," the AIA Logo, and "AIA Contract Documents" are trademarks of The American Institute of Architects. This document was produced at 20:31:18 EDT on 08/06/2026 under Subscription No.20250146710 which expires on 08/21/2026, is not for resale, is licensed for one-time use only, and may only be used in accordance with the AIA Contract Documents® Terms of Service. To report copyright violations, e-mail docinfo@aiacontracts.com.
User Notes: (6a74eee42a65beba85b6bb3c)

similar procedural rules and methods for selecting arbitrator(s).

§ 15.4.4.2 Subject to the rules of the American Arbitration Association or other applicable arbitration rules, either party may include by joinder persons or entities substantially involved in a common question of law or fact whose presence is required if complete relief is to be accorded in arbitration, provided that the party sought to be joined consents in writing to such joinder. Consent to arbitration involving an additional person or entity shall not constitute consent to arbitration of any claim, dispute or other matter in question not described in the written consent.

§ 15.4.4.3 The Owner and Contractor grant to any person or entity made a party to an arbitration conducted under this Section 15.4, whether by joinder or consolidation, the same rights of joinder and consolidation as those of the Owner and Contractor under this Agreement.

AIA Document A201 – 2017. Copyright © 1911, 1915, 1918, 1925, 1937, 1951, 1958, 1961, 1963, 1966, 1970, 1976, 1987, 1997, 2007 and 2017. All rights reserved. "The American Institute of Architects," "American Institute of Architects," "AIA," the AIA Logo, and "AIA Contract Documents" are trademarks of The American Institute of Architects. This document was produced at 20:31:18 EDT on 08/06/2026 under Subscription No.20250146710 which expires on 08/21/2026, is not for resale, is licensed for one-time use only, and may only be used in accordance with the AIA Contract Documents® Terms of Service. To report copyright violations, e-mail docinfo@aiacontracts.com.
User Notes: (6a74eee42a65beba85b6bb3c)

State of West Virginia

Supplementary Conditions to AIA Document A201-2017
General Conditions of the Contract for Construction

The following Supplementary Conditions modify the General Conditions of the Contract for Construction, AIA Document A201, 2017 Edition. Where a portion of the General Conditions is modified or deleted by these Supplementary Conditions, the unaltered portions of the General Conditions shall remain in effect.

Order of Precedence: The documents contained in the contract to which this document has been attached shall be interpreted in the following order of precedence:

First Priority – Documents developed by the State or agency and utilized to provide public notice of the solicitation, along with other general terms and conditions shall be first in priority.

Second Priority – This document "Supplementary Conditions to the AIA Document A201-2017 General Conditions of the Contract for Construction" shall be second in priority.

Third Priority – all other AIA documents including, but not limited to, the AIA Document A201-2017 General Conditions of the Contract for Construction and the A101-2017 Standard Form of Agreement Between Owner and Contractor (when utilized) shall be third or lower in priority.

ARTICLE 1
GENERAL PROVISIONS

Add the following Section to Article 1:

§1.05 PARTY RELATIONS

§1.05 The Owner and their consultants, the Architect and their Consultants, and the Contractor and their Subcontractors agree to proceed with the Work on the basis of mutual trust, good faith and fair dealing.

§1.1 BASIC DEFINITIONS

§1.1.1 THE CONTRACT DOCUMENTS

§1.1.1 Delete the last sentence of this Section and substitute the following:

The Contract Documents also include the Bidding Documents (Advertisement or Invitation to Bid, Request for Quotations/Bids, Instructions to Bidders, Form of Proposal, Bid Bond and Sample Forms), Performance Bond, Payment Bond, Maintenance Bond (if applicable), Certificates of Insurance, Special Provisions For Disadvantaged and Women Business Enterprise Utilization (if bound herein).

§1.1.2 THE CONTRACT

§1.1.2 Make the following changes to Section 1.1.2:

In the last sentence, insert "and the Contractor" after "The Architect" and delete "the Architect's" and insert "their respective".

§1.2 Correlation and Intent of Contract Documents

§1.2.1.1 In the second sentence, remove "any law" and insert "West Virginia law or any applicable federal law". In the last sentence, remove "by law" and insert "West Virginia law or any applicable federal law".

§1.7 Digital Data Use and Transmission

§1.7 Delete the last sentence of this section in its entirety.

§1.8 Building Information Models Use and Reliance

§ 1.8 Remove this section in its entirety and replace it with the following:

"Any use of, or reliance on, all or a portion of a building information model must be approved in advance by Owner and will only be permitted if the Parties have agreed upon and executed written documents to memorialize protocols governing the use of, and reliance on, the information contained in the model."

ARTICLE 2
OWNER

§2.1 GENERAL

§ 2.1.1 Add the following after the last sentence:

Notwithstanding the foregoing, the parties understand that since Owner is a government entity, change orders will often require approval by entities in addition to owner. When owner is a state agency, those entities may include, but are not limited to, the West Virginia Attorney General's Office and the West Virginia Purchasing Division. Additionally, approval may be required by agencies providing project funding, including but not limited to, West Virginia School Building Authority and agencies of the United States federal government.

§2.1.2 Delete Section 2.1.2 in its entirety.

§2.1 Add the following Section to 2.1:

§2.1.3 The Owner and the agency funding the project reserve the right to maintain a full time or part time project representative (sometimes referred to as the "Clerk of the Works") at the project site who shall keep the Owner informed of the progress and quality of the Work and responsibilities. The Contractor shall cooperate and assist the Clerk of the Works in the performance of his/her duties. The Clerk of the Works will not interfere with or be responsible for the Contractor's supervision and direction of the Work, and the Contractor's means, methods, techniques, sequences, and procedures, and for coordinating all portions of the Work. The Clerk of the Works may facilitate communications between the Owner, Architect, and Contractor but has no authority to make decisions for the Owner, approve modifications to the Contract Documents, the Contract Time, or Contract Sum. Additionally, Contractor is not permitted to rely on or consider decisions made by the Clerk of the Works on behalf of Owner

§2.2 Evidence of the Owner's Financial Arrangements: Delete § 2.2 and all of its subsections in its entirety.

§2.3 Information and Services Required of Owner

§2.3.2 Make the following changes to Section 2.3.2:

In first sentence, delete the period and add ", when required pursuant to West Virginia Code §30-12-1 et seq." Add the following sentence at the end of Section 2.3.2: "If the Owner does not retain an architect lawfully licensed to practice architecture or an entity lawfully practicing architecture in the jurisdiction where the Project is located, the Owner will appoint an individual to assume the role and obligations of the Architect pursuant to this Agreement."

§2.3.3 Delete this section in its entirety.

§2.3.4 Delete the last sentence of Section 2.3.4 and substitute the following:

The Contractor shall confirm the locations of each utility. If the Owner has provided geotechnical and other tests to determine subsurface conditions, the Owner will provide such documents to the Contractor; the Contractor acknowledges that it will make no claims for any subsurface or any other conditions revealed by these tests.

ARTICLE 3
CONTRACTOR

§3.2 REVIEW OF CONTRACT DOCUMENTS AND FIELD CONDITIONS BY CONTRACTOR

§3.2.2 Add the following sentence to the end of Section 3.2.2:

Claims by Contractor resulting from its failure to familiarize itself with the site shall be deemed waived. Additionally, by submitting a bid or otherwise entering into this contract, Contractor acknowledges that it has reviewed and understands the contract documents and the work required by those documents. Any claims arising from Contractor's failure to review and understand the contract documents shall be deemed waived.

§3.2.3 Delete Section 3.2.3 in its entirety and substitute the following:

§3.2.3 The Contractor acknowledges its continuing duty to review and evaluate the Construction Documents during performance of its services and shall immediately notify the Owner and the Architect about any problems, conflicts, defects, deficiencies, inconsistencies or omissions it discovers in or between the Construction Documents; and variances it discovers between the Construction Documents and applicable laws, statutes, building codes, rules and regulations.

§ 3.2.4 Add the following clauses to Section 3.2.4:

§3.2.4.1 If the Contractor performs any Work which it knows or should have known involves a recognized problem, conflict, defect, deficiency, inconsistency or omission in the Construction Documents; or a variance between the Construction Documents and requirements of applicable laws, statutes, building codes, rules and regulations, without notifying the Owner and the Architect prior to receiving written authorization from the Architect to proceed, the Contractor shall be responsible for the consequences of such performance.

§3.2.4.2 Before ordering any materials or doing any Work, the Contractor and Subcontractors shall verify all measurements at the site and shall be responsible for the correctness of same. Discrepancies shall be reported in writing to the Architect prior to proceeding with the Work. No extra charge or compensation will be

entertained due to differences between actual measurements and dimensions indicated on the drawings, if such differences do not result in a change in the scope of Work or if the Architect failed to receive written notice before the Work was performed.

§3.4 LABOR AND MATERIALS

§3.4.1 Vendor must review and comply with the following statutory requirements affecting public construction projects, as well as any other applicable laws that are not referenced herein:

- W. Va. Code § 5-19-1 et seq., relating to domestic steel preference.
- W. Va. Code § 5A-3-56 relating to domestic steel preference, provided that the Owner is a state agency subject to Chapter 5A, Article 3 of the W. Va. Code.
- W. Va. Code § §21-1C-1 *et seq.*, relating to local hiring preference
- W. Va. Code §21-1D-1 *et seq.*, relating to drug free workplace requirements.

§3.4 Add the following Sections to 3.4:

§3.4.4 Where materials and equipment are to be provided by the Owner under the Contract Documents, the Contractor shall notify the Owner in writing as to when materials and equipment are required on the project site in sufficient time to avoid delay in the Work.

§3.4.5 The Contractor shall employ labor on the Project or in connection with the Work, capable of working harmoniously with all trade crafts and any other individuals associated with the Project. The Contractor shall also use its best efforts and implement policies and practices to minimize the likelihood of any strike, work stoppage or other labor disturbance. Except as specifically provided in this Agreement, Contractor shall not be entitled to any adjustment in the Contract sum or Contract time and shall be liable to the Owner for all damages suffered by the Owner occurring as a result of work stoppages, slowdowns, disputes, or strikes by the work force of or provided by Contractor or its Subcontractors.

§3.5 WARRANTY

§3.5 Add the following sentence at the end of Section 3.5:

The Contractor agrees to assign to the Owner at time of Final Completion of the Work, any and all manufacturer's warranties relating to materials and labor used in the Work and further agrees to perform the Work in such a manner so as to preserve any and all such warranties.

§3.8 ALLOWANCES

§3.8.3 Make the following change to Section 3.8.3:

§3.8.3 Delete "with reasonable promptness" and insert "in sufficient time to avoid delay in the Work."

Add the following Section to 3.8:

§3.8.4 The Contractor shall promptly submit to the Owner an itemized account of any expenditure by the Contractor of the Contract allowance in sufficient detail to allow the Owner to properly account for such expenditure.

§3.9 SUPERINTENDENT/PROJECT MANAGER

§3.9.1 Add the following sentence to the end of Section 3.9.1:

The Contractor may also employ a competent project manager.

§3.9.2 Make the following changes to Section 3.9.2:

In the first sentence, add "and project manager, if applicable" after "superintendent." In the second sentence, add "or project manager, if applicable," after "superintendent."

§3.9.3 Make the following changes to Section 3.9.3:

In the first sentence, add "or project manager, if applicable," after "superintendent." In the second sentence, add "or project manager, if applicable," after "superintendent."

§3.9 Add the following Section to 3.9:

§3.9.4 The Owner shall have the right, at any time, to direct a change in the Contractor's representatives if their performance is deemed unsatisfactory.

§3.10 CONTRACTOR'S CONSTRUCTION SCHEDULES

§3.10.1 Make the following changes to Section 3.10.1:

In the first sentence, delete the word "promptly" and substitute "by the earliest reasonable date".

Add the following sentence to the end of Section 3.10.1: "The Contractor shall submit an updated construction schedule with each payment application, unless waived by the Owner."

Add the following Sections to 3.10:

§3.10.4 At any time after the first thirty (30) days of the Contract Time, if it is found that the project is two (2) weeks or more behind schedule, beyond approved time extensions, or if at any time during

the last thirty (30) days of the scheduled Contract Time the Contractor is one (1) week or more behind schedule, the Contractor shall immediately submit a plan to the Owner describing how the Work will be placed back on schedule within the remaining Contract Time.

§3.10.5 If the Owner and the Architect determine that the performance of the Work during any stage of the construction schedule last approved by the Owner has not progressed or reached the level of completion required by the Contract Documents, the Owner will have the right to order the Contractor to take corrective measures (hereinafter referred to collectively as Extraordinary Measures) necessary to expedite the progress of the Work, including, without limitation: (1) working additional shifts or overtime; (2) supplying additional manpower, equipment and facilities; and (3) other similar measures. Such Extraordinary Measures shall continue until the progress of the Work complies with the last approved construction schedule. The Owner's right to require Extraordinary Measures is solely for the purpose of ensuring the Contractor's compliance with the construction schedule after allowing for approved extensions of Contract Time as provided elsewhere in this Agreement. The Contractor is not entitled to an adjustment in the Contract Sum in connection with any Extraordinary Measures required by the Owner. The Owner may exercise its rights under this Section as frequently as the Owner deems necessary to ensure that the Contractor's performance of the Work will comply with the construction schedule.

§3.11 DOCUMENTS AND SAMPLES AT THE SITE

§3.11 Insert the following sentence at the end of Section 3.11:

The Contractor's compliance with this Section 3.11 shall be a condition precedent to any obligation of the Owner to make Final Payment pursuant to this Agreement.

§3.15 CLEANING UP

§3.15.2 Delete Section 3.15.2 in its entirety and substitute the following:

§3.15.2 If the Contractor fails to clean up as provided in the Contract Documents, the Owner may do so and may withhold such reasonable costs as necessary for the fulfillment of the Contractor's obligation under this Section 3.15. If the reasonable costs of such cleaning exceed the Contract Sum then due the Contractor, the Contractor shall reimburse the Owner the difference within thirty (30) consecutive calendar days of the Owner's written request.

Any materials, tools, supplies, or other personal property left by the Contractor shall be deemed abandoned property and the Owner shall have no obligation to hold or store the property on behalf of Contractor and may dispose of the abandoned property as if it were property of the State of West Virginia. Provided however, that prior to treating property as abandoned and disposing of it, Owner must first provide Contractor with 10 days notice of its intent to do so. If any materials, tools, supplies or other personal property belong to a subcontractor, then Contractor is obligated to communicate this notice to its subcontractor immediately.

§3.15 Add the following Section to 3.15:

§3.15.3 In order to achieve Substantial Completion, as defined by Section 9.8, for any portion of the Work, the Contractor must have the area where the Work is located fully cleaned and all materials and/or debris removed from site. The Certificate of Substantial Completion will not be issued until the Contractor has met this obligation.

ARTICLE 4
ARCHITECT

§4.1 GENERAL

§4.2 ADMINISTRATION OF THE CONTRACT

§4.2 Make the following changes to Section 4.2:

§4.2.1 In the first sentence of Section 4.2.1 after the word Architect add ", unless otherwise indicated by the Owner,".

§4.2.2 In the first sentence of Section 4.2.2 strike the word "generally."

§4.2.3 In the first sentence of Section 4.2.3 strike the word "reasonably."

§4.2.5 Add the following sentence at the end of Section 4.2.5:

The Architect upon receipt of an Application for Payment from the Contractor shall either review and certify such amounts due for payment or return such Application for Payment to the Contractor for correction(s) within five (5) consecutive business days of receipt.

§4.2.7 Delete the first sentence of Section 4.2.7 and substitute the following:

The Architect will review and approve, or take other appropriate action upon, the Contractor's submittals such as Shop Drawings, Product Data and Samples for the purpose of checking for conformance with the Contract Documents.

Modify the second to last sentence by removing it in its entirety and replacing it with the following: The Architect's review shall not constitute approval of safety precautions or of any construction means, methods, techniques, sequences, or procedures, unless the Architect has established the required construction means, methods, techniques, sequences, or procedures, or the Contract Documents require such approval.

§4.2.8 Make the following change to Section 4.2.8:

In the first sentence, after the word Architect add ", in consultation with the Owner,".

ARTICLE 5
SUBCONTRACTORS

§5.2 Award of Subcontracts and Other Contracts for Portions of Work

§5.2.1 Add the following sentence to Section 5.2.1.

This provision in no way limits the Contractor's legal obligations to report subcontractors and labor/material suppliers under W. Va. Code § 5-22-1(f) and obtain approval under W. Va. Code § 5-22-1(g) prior to any subcontractor substitution.

§5.4 Contingent Assignment of Subcontracts: This section is removed in its entirety and replaced with the following:

§5.4 Emergency Contracts with Subcontractors:

In the event that the general contractor fails to fulfill its contractual obligations and the performance bond has failed to provide an adequate remedy, Owner has the right to execute emergency contracts with subcontractors to ensure continuation of the work, provided that doing so is in compliance with the laws, rules, and procedures governing emergency contracting authority for Owner, and the emergency contract terms comply with all other applicable laws, rules, and procedures.

ARTICLE 7
CHANGES IN THE WORK

§7.1 General

§7.1.2. In Section 7.1.2. remove the word "alone" and insert "with approval by the Owner."

§7.2 CHANGE ORDERS

§7.2 Add the following Section to 7.2:

§7.2.2 A written Change Order as defined under 7.2.1 above constitutes a final settlement of all matters relating to the change in the Work which is the subject of the Change Order, including, but not limited to general conditions, all direct or indirect costs associated with such change and any and all adjustment to the Contract Sum and Contract Time. The parties also understand and agree that if Owner is a state agency, change orders may require approval by entities in addition to Owner. Those entities may include, but are not limited to, the West Virginia Purchasing Division, and the West Virginia Attorney General's Office. Owner and Contractor must discuss the change order approval requirements prior to executing this agreement.

Add the following section to § 7.2

§7.2.3. Allowance for Overhead and Profit: Contractor's overhead and profit for a change order issued under this Article included in the total cost to the Owner shall not exceed based on the following schedule:

.1 For the Contractor, for any Work performed by the Contractor's own forces, fifteen percent (15%) of the cost.

.2 For the Contractor, for Work performed by the Contractor's Subcontractor, ten percent (10%) of the amount due the Subcontractor.

.3 For each Subcontractor or Sub-Subcontractor involved, for any Work performed by that Subcontractor's own forces, fifteen percent (15%) of the cost.

.4. For each Subcontractor, for Work performed by the Subcontractor's Sub-subcontractors, ten percent (10%) of the amount due the Sub-subcontractor.

.5 Cost to which overhead and profit is to be applied shall be determined in accordance with Section 7.3.7. Estimated labor hours shall include hours only for those workmen and working foremen directly involved in performing the Change Order work. Supervision above the level of working foremen (such as general foremen, superintendent, project manager, etc.) is considered to be included in the allowance for Overhead and Profit. Hand tools are defined as equipment with a value of $1,000 or less. For Contractor owned equipment, the "bare" equipment rental rates allowed to be used for pricing Change Order proposals shall be not more than the monthly rate listed in the most current publication of The AED Green Book divided by 176 to arrive at a maximum hourly rate to be applied to the hours the equipment is used performing the Change Order work.

.6 In order to facilitate checking of quotations for extras or credits, all proposals, except those so minor that their propriety can be seen by inspection, shall be accompanied by a complete itemization of costs including labor, material, equipment and Subcontractors. Details to be submitted will include detailed line item estimates showing detailed materials quantity take-offs, material prices by item and related labor hour pricing information and extensions (by line item or by drawing as applicable.) Where major cost items are Subcontracts, they shall also be itemized as prescribed above. In no case will a change involving over $10,000 be approved without such an itemization.

.7 Local Business and Occupation Taxes, if applicable, shall be calculated on the cost of the Work, overhead and profit.

.8 Overhead and profit shall not be calculated on changes in the Work involving unit prices. Unit prices are to have overhead and profit included in the price quoted.

.9 Under no circumstances is Contractor permitted to charge for the passage of time (often referred to as general conditions or winter conditions) without an identified, itemized, and concretely provable cost borne by Contractor. Contractor has a duty to mitigate costs during a delay period to the fullest extent possible and Contractor will not be paid for costs that could have been mitigated. Calculating a daily delay rate without properly identifying, itemizing, and proving actual, unmitigateable costs, is prohibited. Contractor understands and accepts that it has the responsibility to prove that costs could not be mitigated prior to submitting a request for payment.

§7.3 CONSTRUCTION CHANGE DIRECTIVES

§7.3.4 Make the following change in Section 7.3.4:

In the fourth line of the first sentence, delete the words "an amount for overhead and profit as set forth in the Agreement, or if no such amount is set forth in the Agreement, a reasonable amount" and substitute "an allowance for overhead and profit in accordance with clauses 7.3.11.1 through 7.3.11.9 below."

§7.3.7 Delete the word "recorded" and replace it with "processed".

§7.3.9 Delete Section 7.3.9 in its entirety and substitute the following:

§7.3.9 Pending final determination of the total cost of a Construction Change Directive to the Owner, amounts not in dispute for such changes in the Work shall be included in Applications for Payment provided these amounts have been added to the Contract by Change Order and a purchase order has been issued for the Change Order.

§7.3.10 Add the following sentence to the end of Section 7.3.10:

The Parties will utilize their best efforts to issue a change order within 60 days of agreement being reached, but failure to do so will not give rise to grounds for contract cancellation, penalties, or any other cause of action.

Add the following Section to 7.3:

§7.3.11 In Section 7.3.7, the allowance for overhead and profit for a change directive issued under this Article included in the total cost to the Owner shall not exceed the following schedule:

.1 For the Contractor, for any Work performed by the Contractor's own forces, fifteen percent (15%) of the cost.

.2 For the Contractor, for Work performed by the Contractor's Subcontractor, ten percent (10%) of the amount due the Subcontractor.

.3 For each Subcontractor or Sub-Subcontractor involved, for any Work performed by that Subcontractor's own forces, fifteen percent (15%) of the cost.

.4. For each Subcontractor, for Work performed by the Subcontractor's Sub-subcontractors, ten percent (10%) of the amount due the Sub-subcontractor.

.5 Cost to which overhead and profit is to be applied shall be determined in accordance with Section 7.3.7. Estimated labor hours shall include hours only for those workmen and working foremen directly involved in performing the Change Order work. Supervision above the level of working foremen (such as general foremen, superintendent, project manager, etc.) is considered to be included in the allowance for Overhead and Profit. Hand tools are defined as equipment with a value of $1,000 or less. For Contractor owned equipment, the "bare" equipment rental rates allowed to be used for pricing Change Order proposals shall be not more than the monthly rate listed in the most current publication of The AED Green Book divided by 176 to arrive at a maximum hourly rate to be applied to the hours the equipment is used performing the Change Order work.

.6 In order to facilitate checking of quotations for extras or credits, all proposals, except those so minor that their propriety can be seen by inspection, shall be accompanied by a complete itemization of costs including labor, material, equipment and Subcontractors. Details to be submitted will include detailed line item estimates showing detailed materials quantity take-offs, material prices by item and related labor hour pricing information and extensions (by line item or by drawing as applicable.) Where major cost items are Subcontracts, they shall also be itemized as prescribed above. In no case will a change involving over $10,000 be approved without such an itemization.

.7 Local Business and Occupation Taxes, if applicable, shall be calculated on the cost of the Work, overhead and profit.

.8 Overhead and profit shall not be calculated on changes in the Work involving unit prices. Unit prices are to have overhead and profit included in the price quoted.

.9 Under no circumstances is Contractor permitted to charge for the passage of time (often referred to as general conditions or winter conditions) without an identified, itemized, and concretely provable cost borne by Contractor. Contractor has a duty to mitigate costs during a delay period to the fullest extent possible and Contractor will not be paid for costs that could have been mitigated. Calculating a daily delay rate

without properly identifying, itemizing, and proving actual, unmitigateable costs, is prohibited. Contractor understands and accepts that it has the responsibility to prove that costs could not be mitigated prior to submitting a request for payment.

§7.4 Minor Changes in Work. Insert the following sentence at the end of section 7.4:

"Contractor may request that Architect provide written confirmation that Owner has agreed to the minor change, and if requested, Architect will provide it."

ARTICLE 8
TIME

§8.3 DELAYS AND EXTENSIONS OF TIME

§8.3.1 In the first sentence, delete "unusual delay in deliveries," and add "unmitigatable costs attributable to" before the words "adverse weather conditions."

ARTICLE 9
PAYMENTS AND COMPLETION

§9.1 Contract Sum

§9.1.2 Add the following sentence to the end of section 9.1.2:

"Any equitable adjustment of unit prices must be processed as a change order to the contract"

§9.2 SCHEDULE OF VALUES

§9.2 Make the following changes to Section 9.2:

In the first sentence add "and the Owner" after the first reference to the Architect. In the second sentence add "or the Owner" after Architect. Remove the last sentence in its entirety and replace it with the following:

"Any changes to the schedule of values shall be submitted to the Architect and the Owner and supported by such data to substantiate its accuracy as the Architect or owner may require. This schedule, unless objected to by the Architect or the Owner, shall be used as a basis for reviewing the Contractor's subsequent Applications for Payment."

§9.3 APPLICATIONS FOR PAYMENT

§9.3 Make the following changes to Section 9.3:

§9.3.1 In the first sentence add "and the Owner" after the first reference to the Architect and add "and other required documents" after the words "schedule of values."

§9.3.1.1 Delete clause 9.3.1.1 in its entirety and substitute the following:

§9.3.1.1 Such applications may include requests for payment on account of changes in the Work authorized by Construction Change Directives and Change Orders only after a purchase order has been issued for the Work affected.

§9.3.1 Add the following clauses to Section 9.3.1:

§9.3.1.3 Until the Work is fifty percent (50%) complete, the Owner will withhold as retainage 10% of the amount due the Contractor on account of progress payments. At the time the Work is fifty percent (50%) complete and thereafter, if the manner of completion of the Work and its progress are and remain satisfactory to the Owner and Architect, and in the absence of other good and sufficient reasons, the Architect will, on presentation by the Contractor of Consent of Surety, authorize any remaining partial payments to be paid in full.

§9.3.1.4 The full Contract retainage may be reinstated if the manner of completion of the Work and its progress do not remain satisfactory to the Owner and Architect, if the Surety withholds its consent, or for other good and sufficient reasons.

§9.4 CERTIFICATES FOR PAYMENT

§9.4.1 After the phrase "in the full amount of the Application for Payment," insert the phrase "less any retainage withheld pursuant to section 9.3.1.3,".

§9.6 PROGRESS PAYMENTS

§9.6.7 Delete Section 9.6.7 in its entirety.

§9.6.8 Delete Section 9.6.8 in its entirety.

§9.7 FAILURE OF PAYMENT

§9.7 Make the following changes in Section 9.7:

In line two, change "seven days" to "sixty days." In line four, delete "binding dispute resolution" and substitute "the West Virginia Claims Commission"

§9.8 SUBSTANTIAL COMPLETION

§9.8.3 Add the following clause to Section 9.8.3:

If Architect is required to perform more than one inspection under this subsection, Contractor shall be responsible for paying the Owner for the cost of the additional inspection, which will be paid by Owner to Architect, at the hourly rate established in the contract between Owner and Architect.

§9.8.5 Add the following clause to Section 9.8.5:

§9.8.5.1 The payment of retainage shall be sufficient to increase the total payments to ninety-five percent (95%) for the Work or designated portion thereof being accepted as Substantially Complete, less any amounts as the Architect shall determine for any Work that is not complete, not in accordance with the Contract Documents, or for unsettled claims.

§9.10 FINAL COMPLETION AND FINAL PAYMENT

§9.10.1 Add the following to the end of Section 9.10.1:

If Architect is required to perform more than one inspection under this subsection, Contractor shall be responsible for paying the Owner for the cost of the additional inspection, which will be paid by Owner to Architect, at the hourly rate established in the contract between Owner and Architect.

§9.10.2 Make the following changes in Section 9.10.2:

In the first sentence, delete "for which the Owner or the Owner's property might be responsible or encumbered (less amounts withheld by Owner)."

Add the following clause to Section 9.10.2:

§9.10.2.1 Before final payment is due the Contractor, all applicable State and local taxes must be paid. If requested by the Owner, the Contractor shall present evidence that payment or satisfaction of all such tax obligations has been made.

§9.10.3 Add the following clause to Section 9.10.3:

9.10.3.1 Unless and to the extent final completion is delayed through no fault of the Contractor as provided in Section 9.10.3, the Owner shall be under no obligation to increase payments above ninety-five percent (95%) until final completion of the Work is Certified by the Architect.

§9.10.4 Make the following changes in Section 9.10.4:

In the first sentence, delete the word "the" and replace it with "Unless and until the Contractor makes a subsequent Claim against the Owner, the".

Add the following as the last sentence. "Neither the Owner's offer of a final payment nor its acceptance by the Contractor shall legally prevent or limit the Owner's right to assert any and all counterclaims in litigation filed by the Contractor as allowed in section 15.1.8."

Add the following Sections to Article 9:

§9.11 LIQUIDATED DAMAGES

§9.11.1 The Owner will suffer financial loss if the Work is not Substantially Complete within the Contract Time as defined in Article 8, and if final completion is not achieved within the specified time frame following Substantial Completion. As liquidated damages, and not as a penalty, the Contractor and the Contractor's surety shall be liable for and shall pay the Owner the sum(s) stated in this Agreement and/or purchase order.

§9.11.2 Allowances may be made for delays due to shortages of materials and/or energy resources, subject to proof by documentation, and also for delays due to strikes or other delays beyond the control of the Contractor. All delays and any claim for extension of Contract Time must be properly documented in accordance with Section 15.1.5 by the Contractor and must be made within the time limits stated in Section 15.1.2.

ARTICLE 10
PROTECTION OF PERSONS AND PROPERTY

§10.2.8 INJURY OR DAMAGE TO PERSON OR PROPERTY

§10.2.8 Make the following changes to Section 10.2.8:

In the first sentence, delete "within a reasonable time not exceeding 21 days" and substitute "immediately".

§10.3 HAZARDOUS MATERIALS

§10.3.3 Delete Section 10.3.3 in its entirety.

ARTICLE 11
INSURANCE AND BONDS

§11.1 CONTRACTOR'S LIABILITY INSURANCE

§11.1.2 Add the following to the end of §11.1.2.

At a minimum the Contract shall provide, at the Contractor's Expense:

§11.1.2.1. a Performance Bond and a Labor and Material Payment Bond for 100% of the Contract Sum and, if applicable, a two-year roofing Maintenance Bond for the full value of the roofing system.

§11.1.2.2 An attorney-in-fact who executes the bonds on behalf of the surety shall affix thereto a certified and current copy of power of attorney.

§11.1.2.3 The bonds shall be issued on State of West Virginia forms. The Contractor shall deliver the required bonds and all other contract documents to the Owner not later than 15 days following receipt of the Owner's notice of intent to award a Contract.

§11.2 Owner's Insurance Delete section 11.2 in its entirety.

§11.4 Loss of Use, Business Interruption, and Delay in Completion Insurance

§11.4 Section 11.4 is deleted in its entirety.

§11.5.1 Make the following changes in Section 11.5.1:

In the first sentence, substitute "Contractor" for "Owner" each time the latter word appears.

§11.5.2 Delete Section 11.5.2 in its entirety and substitute the following:

§11.5.2 Prior to settlement of insured loss, the Contractor shall notify the parties of the terms of the proposed settlement as well as the proposed allocation of the insurance proceeds. The parties shall have 14 days from the receipt of notice to object. If no objection is made, the Contractor shall proceed as proposed and allocate the settlement accordingly. If such objection is made, the dispute shall be resolved as provided in Section 15.4. The Contractor, in that case, shall make settlement with insurers in accordance with directions of the Court. If distribution of the insurance proceeds as directed by the Court is required, the Court will direct such distribution. Any work to repair the damage will be incorporated into the contract as a change order.

ARTICLE 13
MISCELLANEOUS PROVISIONS

§13.4 TESTS AND INSPECTIONS

§13.4.1 Remove the phrase "so require" and insert in its place "prohibit delegation of the test to Contractor"

§13.6 INTEREST

§13.6 Delete Section 13.5 in its entirety and substitute the following:

Notwithstanding any other provision in the Contract Documents, West Virginia Code does not authorize the payment of interest on late payments. Accordingly, interest charges for late payment are prohibited.

Add the following Sections to Article 13:

§13.6 WORKERS COMPENSATION

The Contractor shall provide proof of compliance with West Virginia Worker's Compensation laws and regulations.

§13.7 CONTRACTOR'S LICENSE

§13.7.1 West Virginia Code §21-11-2 requires that all persons desiring to perform contractual work in West Virginia shall be duly licensed. The West Virginia Contractor's Licensing Board is empowered to issue a contractor's license.

§13.7.2 West Virginia Code §21-11-11 requires any prospective Bidder to include the Bidder's contractor's license number on its Bid. The successful Bidder will be required to furnish a copy of its contractor's license in a classification appropriate to the Work prior to issuance of a purchase order/contract.

ARTICLE 14
TERMINATION OR SUSPENSION OF THE CONTRACT

§14.1 TERMINATION BY THE CONTRACTOR

§14.1.1 Make the following changes in Section 14.1.1:

At the end of clause 14.1.1.3 delete "; or" and insert a period.

Delete clause 14.1.1.4 in its entirety.

§14.1.3 Delete Section 14.1.3 in its entirety and substitute the following:

§14.1.3 If one of the reasons described in Section 14.1.1 or 14.1.2 exist, the Contractor may, upon seven days written notice to the Owner and Architect, terminate the Contract. In such event, the Contractor shall be paid for all Work performed in accordance with the Contract Documents, for reasonable and proven termination expenses and a reasonable allowance for overhead and profit. However, such payment, exclusive of termination expenses, shall not exceed the Contract Sum as reduced by other payments made to the Contractor and further reduced by the value of Work as yet not completed. The Contractor shall be entitled to reasonable overhead, but not profit, on Work not performed.

§14.2 TERMINATION BY THE OWNER FOR CAUSE

§14.2.4 Delete Section 14.2.4 in its entirety and substitute the following:

§14.2.4 If the unpaid balance of the Contract Sum exceeds the cost of finishing the Work, including compensation for the Architect's services and expenses made necessary thereby, and other

damages incurred by the Owner and not expressly waived, such excess shall not be paid to the Contractor. If such costs and damages exceed the unpaid balance, the Contractor shall pay the difference to the Owner. The amount to be paid to the Owner shall be certified by the Initial Decision Maker, upon application, and this obligation for payment shall survive termination of the Contract.

§14.4 TERMINATION BY THE OWNER FOR CONVENIENCE

§14.4.1 Delete Section 14.4.1 in its entirety and substitute the following:

§14.4.1 The Owner may, at any time, terminate the Contract for the Owner's convenience and without cause upon thirty days written notice.

§14.4.3 Delete Section 14.4.3 in its entirety and substitute the following:

§14.4.3 In case of such termination for the Owner's convenience, the Contractor shall be entitled to receive payment from the Owner on the same basis provided in Section 14.1.3 above.

Add the following Section to Article 14:

§14.5 FISCAL YEAR FUNDING

§14.5 Work performed under this Contract is to continue in the succeeding fiscal year contingent upon funds being appropriated by the Legislature for this Work. In the event funds are not appropriated for this Work, this Contract becomes of no effect and is null and void after June 30.

ARTICLE 15
CLAIMS AND DISPUTES

§15.1 Claims

§15.1.2 TIME LIMITS ON CLAIMS

§15.1.2 Delete Section 15.1.2 in its entirety and substitute the following:

Any applicable statute of limitations shall be in accordance with West Virginia Code.

§15.1.3 **NOTICE OF CLAIMS** Add the following to § 15.1.3:

§15.1.3.3 All claims, and notice of claims that require an increase in contract time, contract scope, or contract sum must be made in writing.

§ 15.1.8 is added to the Contract as follows:

§ 15.1.8 Counterclaims – In the event that Contractor makes a claim, Owner reserves the right to make a counterclaim and will not be barred from doing so even if final payment has been made.

§15.2 INITIAL DECISION

§15.2.1 In the third sentence of Section 15.2.1 , insert "or litigation" following the word "mediation" and remove the phrase "binding dispute resolution" and replace it with "or litigation".

§15.2.5 Delete the last sentence in Section 15.2.5 and substitute the following:

Approval or rejection of a claim by the Initial Decision Maker shall be final and binding on the parties unless it is pursued further by either party in accordance with Section 15.2.6.

§15.2.6 Make the following change to clause 15.2.6.1:

In the last sentence, delete "or pursue binding dispute resolution proceedings."

§15.2.8 Delete Section 15.2.8 in its entirety.

§15.3 MEDIATION

§15.3.1 Delete "binding dispute resolution" and substitute "litigation in a court of competent jurisdiction."

§15.3.2 Delete Section 15.3.2 in its entirety and substitute the following:

§15.3.2 The parties shall endeavor to resolve their Claims by non-binding mediation which, unless the parties mutually agree otherwise, shall be administered by the American Arbitration Association in accordance with its Construction Industry Mediation Procedures in effect on the date of the Agreement.

§ 15.3.3 Remove section 15.3.3 in its entirety

§15.4 ARBITRATION

§15.4 Delete Section 15.4 in its entirety and substitute the following:

§15.4 SETTLEMENT OF CLAIMS

§15.4.1 The Constitution of West Virginia grants the State sovereign immunity from any and all Claims against the public treasury. This immunity applies and is extended to all agencies of the State, including the Owner. It shall be in full force and effect as it relates to this Contract. The West Virginia Legislature, recognizing that certain Claims against the State may constitute a moral obligation of the State and should be heard, has established the West Virginia Claims Commission for this purpose. The Parties understand that this sovereign immunity and the Constitution of the

State of West Virginia prohibit the State and Owner, from entering into binding arbitration. Notwithstanding any provision to the contrary in the Contract Documents, all references to arbitration, regardless of whether they are included in the AIA Document A201-2017 or another related document are hereby deleted and all Claims of the Contractor for monetary relief, and only of the Contractor, arising out of or related to this Contract shall be decided by the West Virginia Claims Commission. The following Sections have been rewritten to bring them into conformance with the foregoing.

§15.4.2 Claims by the Owner may be brought against the Contractor in the Circuit Court of Kanawha County, West Virginia, or in any other court that has jurisdiction, as the Owner may elect.

§15.4.3 Any Claim arising out of or related to the Contract, except Claims relating to aesthetic effect and except those waived as provided for in Sections 15.1.6, 9.10.4 and 9.10.5, shall, within 30 days after submission of the decision by the Initial Decision Maker, be settled for the Contractor by the West Virginia Claims Commission or, for the Owner, by the Circuit Court of Kanawha County or any other court of jurisdiction as the Owner may elect.

§15.4.4 Notice of such action shall be filed in writing with the other party to the Contract, and a copy of such notice shall be filed with the Initial Decision Maker and the Architect, if applicable.

§15.4.5 During court proceedings, the Owner and the Contractor shall comply with Section 15.1.3.

§15.4.6 Claims shall be made within the time limits specified in Section 15.2.6.1.

§15.4.7 The party filing a Claim must assert in the demand all Claims then known to that party on which action is permitted.

Add the following Article:

ARTICLE 16
EQUAL OPPORTUNITY

§16.1 COMPLIANCE WITH REGULATIONS UNDER TITLE VI OF THE FEDERAL CIVIL RIGHTS ACT OF 1964 AND EXECUTIVE ORDER 65-2 BY THE GOVERNOR OF WEST VIRGINIA DATED DECEMBER 15, 1965

§16.1.1 The Contractor agrees that it will comply with Title VI of the Federal Civil Rights Act of 1964 (P.L. 88352) and the regulations of the State of West Virginia, to the end that no person in the State, or in the United States, shall on the grounds of race, color, or national origin, be excluded from participation in, be denied the benefits of, or otherwise subjected to discrimination under any program or activity for which the Contractor receives any recompense or other consideration of value, either directly or indirectly from the State; and HEREBY GIVES ASSURANCE THAT it will immediately take any measures necessary to effectuate this Agreement.

§16.1.2 If any real property or structure thereon is provided or improved, this assurance shall obligate the Contractor, or in the case of any transfer of such property, any transferee, for the period during which the real property or structure is used for a purpose for which any State payment is extended or for another purpose involving the provision of similar services or benefits. If any other goods or services are so provided, this assurance shall obligate the Contractor for the period during which it supplies such goods or services.

§16.1.3 The Contractor recognizes and agrees that such right to provide property, goods or services to the State will be extended in reliance on the representations and agreements made in assurance, and that the State shall have the right to seek judicial enforcement of this assurance. This is binding on the Contractor, its successors, transferee, and assignee, or any authorized person on behalf of the Contractor.

END OF SUPPLEMENTARY CONDITIONS TO AIA DOCUMENT A201-2017

Any provisions of the Contract Documents that conflict with these Supplementary Conditions shall be null and void unless they have been approved in writing by the applicable State purchasing officer and the Attorney General, and are clearly identified as such in the bid documents.

The Owner and Contractor hereby agree to the full performance of the covenants contained herein.

IN WITNESS WHEREOF, the Owner and Contractor have entered into this Agreement as of the effective date as stated in the A101-2017 (when utilized) or other Contract Documents.

Owner:	Contractor:
By: _____	By: _____
Title: _____	Title: _____
Date: _____	Date: _____

This Supplementary Conditions to AIA Document A201-2017, General Conditions of the Contract for Construction, has been approved as to form on this 20th day of February, 2019, by the West Virginia Attorney General's office as indicated in the signature line below. Any modification of this document is void unless expressly approved in writing by the West Virginia Attorney General's Office.

PATRICK MORRISEY, ATTORNEY GENERAL

BY: _____
DEPUTY ATTORNEY GENERAL

WAGE RATES

"General Decision Number: WV20260079 05/18/2026

State: West Virginia

Construction Types: Heavy

Counties: West Virginia Counties of
Pleasants, Wirt and Wood

Modification Number	Publication Date
0	01/02/2026
1	05/18/2026

ENGI0132-026 12/01/2024

	Rates	Fringes
POWER EQUIPMENT OPERATOR: GROUP 2 LOADERS UP TO SIX (6) CUBIC YARD CAPACITY, BACKHOE, BULLDOZERS, COMPACTOR, FORKLIFT, GRADER/BLADE, MECHANIC, EXCAVATORS AND SHOVELS WITH AN OPERATING WEIGHT OF UP TO ONE HUNDRED TEN THOUSAND (110,000) POUNDS, TRACTOR, TRENCHER	$ 39.19	20.45
POWER EQUIPMENT OPERATOR: GROUP 1 CRANE (TOWER), LOADERS OF SIX (6) CUBIC YARD CAPACITY AND OVER, EXCAVATORS AND SHOVELS WITH AN OPERATING WEIGHT OF ONE HUNDRED TEN THOUSAND (110,000) POUNDS AND OVER	$ 41.95	20.45

IRON0549-011 12/01/2024

	Rates	Fringes
IRONWORKER: ORNAMENTAL	$ 35.50	29.11

IRON0787-007 12/01/2025

	Rates	Fringes
IRONWORKER, REINFORCING	$ 36.10	24.65

LABO0379-038 12/01/2020

	Rates	Fringes
LABORER: GROUP 2 CARPENTER TENDER, COMMON OR GENERAL, FLAGGER, LANDSCAPE, WATER BOY	$ 25.26	16.50
LABORER: GROUP 1 AIR TOOL OPERATOR, ASPHALT RAKER, BOBCAT OPERATOR (CLEAN UP/DEMOLITION), BUSHHAMMER, CHAIN SAW, CONCRETE SAW (HAND HELD/WALK BEHIND), CONCRETE WORKER, HAND HELD DRILL, GRADE CHECKER, GUARDRAIL INSTALLATION, MASON TENDER-CEMENT/CONCRETE, PIPELAYER, SKYTRAK FORKLIFT OPERATOR	$ 26.32	16.50

PAIN1144-006 12/01/2024

	Rates	Fringes
PAINTER: SPRAY	$ 34.49	17.53

PLAS0926-001 12/01/2025

	Rates	Fringes
CEMENT MASON/CONCRETE FINISHER	$ 35.77	27.54

SUWV2012-077 08/13/2012

	Rates	Fringes
TRUCK DRIVER, DUMP (EXCLUDING OFF THE ROAD TRUCKS)	$ 22.34	13.31
OPERATOR: ROLLER	$ 23.49	14.88
OPERATOR: PAVER (ASPHALT, AGGREGATE, AND CONCRETE)	$ 24.39	15.50
OPERATOR: OILER	$ 21.44	14.42
OPERATOR: CRANE	$ 26.85	13.52
OPERATOR: CONCRETE PUMP	$ 26.79	9.35
OPERATOR: BOOM	$ 28.91	10.49
OPERATOR: BOBCAT/SKID STEER/SKID LOADER	$ 21.49	13.15
IRONWORKER, STRUCTURAL	$ 37.02	3.00
ELECTRICIAN	$ 28.70	17.12
CARPENTER, INCLUDES FORM WORK	$ 31.13	3.00

TEAM0175-006 12/07/2015

	Rates	Fringes
TRUCK DRIVER: TRACTOR HAUL TRUCK	$ 31.77	15.98
TRUCK DRIVER: OFF THE ROAD TRUCK	$ 31.77	15.98
TRUCK DRIVER: FLATBED TRUCK	$ 30.98	15.98

UAVGWV0021 01/01/2019

	Rates	Fringes
LABORER: MASON TENDER - BRICK	$ 26.17	16.50
LABORER (MORTAR MIXER)	$ 26.17	16.50

UAVGWV0022 01/01/2024

	Rates	Fringes
POWER EQUIPMENT OPERATOR: DRILL	$ 35.19	19.18

WELDERS - Receive rate prescribed for craft performing operation to which welding is incidental.

==========

Note: Executive Order (EO) 13706, Establishing Paid Sick Leave for Federal Contractors applies to all contracts subject to the Davis-Bacon Act for which the contract is awarded (and any solicitation was issued) on or after January 1, 2017. If this contract is covered by the EO, the contractor must provide employees with 1 hour of paid sick leave for every 30 hours they work, up to 56 hours of paid sick leave each year. Employees must be permitted to use paid sick leave for their own illness, injury or other health-related needs, including preventive care; to assist a family member (or person who is like family to the employee) who is ill, injured, or has other health-related needs, including preventive care; or for reasons resulting from, or to assist a family member (or person who is like family to the employee) who is a victim of, domestic violence, sexual assault, or stalking. Additional information on contractor requirements and worker protections under the EO is available at https://www.dol.gov/agencies/whd/government-contracts.

Note: Executive Order 13658 generally applies to contracts subject to the Davis-Bacon Act that were awarded on or between January 1,

2015 and January 29, 2022, and that have not been renewed or extended on or after January 30, 2022. Executive Order 13658 does not apply to contracts subject only to the Davis-Bacon Related Acts regardless of when they were awarded. If a contract is subject to Executive Order 13658, the contractor must pay all covered workers at least $13.65 per hour (or the applicable wage rate listed on this wage determination, if it is higher) for all hours spent performing on the contract from May 11, 2026, through December 31, 2026. The applicable Executive Order minimum wage rate will be adjusted annually. Additional information on contractor requirements and worker protections under Executive Order 13658 is available at www.dol.gov/whd/govcontracts.

Unlisted classifications needed for work not included within the scope of the classifications listed may be added after award only as provided in the labor standards contract clauses (29CFR 5.5 (a) (1) (iii)).

The body of each wage determination lists the classifications and wage rates that have been found to be prevailing for the type(s) of construction and geographic area covered by the wage determination. The classifications are listed in alphabetical order under rate identifiers indicating whether the particular rate is a union rate (current union negotiated rate), a survey rate, a weighted union average rate, a state adopted rate, or a supplemental classification rate.

Union Rate Identifiers

A four-letter identifier beginning with characters other than ⁄SU⁄, ⁄UAVG⁄, ⁄SA⁄, or ⁄SC⁄ denotes that a union rate was prevailing for that classification in the survey. Example: PLUM0198-005 07/01/2024. PLUM is an identifier of the union whose collectively bargained rate prevailed in the survey for this classification, which in this example would be Plumbers. 0198 indicates the local union number or district council number where applicable, i.e., Plumbers Local 0198. The next number, 005 in the example, is an internal number used in processing the wage determination. The date, 07/01/2024 in the example, is the effective date of the most current negotiated rate.

Union prevailing wage rates are updated to reflect all changes over time that are reported to WHD in the rates in the collective bargaining agreement (CBA) governing the classification.

Union Average Rate Identifiers

The UAVG identifier indicates that no single rate prevailed for those classifications, but that 100% of the data reported for the classifications reflected union rates. EXAMPLE: UAVG-OH-0010 01/01/2024. UAVG indicates that the rate is a weighted union average rate. OH indicates the State of Ohio. The next number, 0010 in the example, is an internal number used in producing the wage determination. The date, 01/01/2024 in the example, indicates the date the wage determination was updated to reflect the most current union average rate.

A UAVG rate will be updated once a year, usually in January, to reflect a weighted average of the current rates in the collective bargaining agreements on which the rate is based.

Survey Rate Identifiers

The ⿰SU⿰ identifier indicates that either a single non-union rate prevailed (as defined in 29 CFR 1.2) for this classification in the survey or that the rate was derived by computing a weighted average rate based on all the rates reported in the survey for that classification. As a weighted average rate includes all rates reported in the survey, it may include both union and non-union rates. Example: SUFL2022-007 6/27/2024. SU indicates the rate is a single non-union prevailing rate or a weighted average of survey data for that classification. FL indicates the State of Florida. 2022 is the year of the survey on which these classifications and rates are based. The next number, 007 in the example, is an internal number used in producing the wage determination. The date, 6/27/2024 in the example, indicates the survey completion date for the classifications and rates under that identifier.

⿰SU⿰ wage rates typically remain in effect until a new survey is conducted. However, the Wage and Hour Division (WHD) has the discretion to update such rates under 29 CFR 1.6(c)(1).

State Adopted Rate Identifiers

The ⿰SA⿰ identifier indicates that the classifications and prevailing wage rates set by a state (or local) government were adopted under 29 C.F.R 1.3(g)-(h). Example: SAME2023-007 01/03/2024. SA reflects that the rates are state adopted. ME refers to the State of Maine. 2023 is the year during which the state completed the survey on which the listed classifications and rates are based. The next number, 007 in the example, is an internal number used in producing the wage determination. The date, 01/03/2024 in the example, reflects the date on which the classifications and rates under the ⿰SA⿰ identifier took effect under state law in the state from which the rates were adopted.

WAGE DETERMINATION APPEALS PROCESS

1) Has there been an initial decision in the matter? This can be:

a) a survey underlying a wage determination
b) an existing published wage determination
c) an initial WHD letter setting forth a position on a wage determination matter
d) an initial conformance (additional classification and rate) determination

On survey related matters, initial contact, including requests for summaries of surveys, should be directed to the WHD Branch of Wage Surveys. Requests can be submitted via email to davisbaconinfo@dol.gov or by mail to:

Branch of Wage Surveys
Wage and Hour Division
U.S. Department of Labor
200 Constitution Avenue, N.W.
Washington, DC 20210

Regarding any other wage determination matter such as conformance decisions, requests for initial decisions should be directed to the WHD Branch of Construction Wage Determinations. Requests can be submitted via email to BCWD-Office@dol.gov or by mail to:

Branch of Construction Wage Determinations
Wage and Hour Division
U.S. Department of Labor
200 Constitution Avenue, N.W.
Washington, DC 20210

2) If an initial decision has been issued, then any interested party (those affected by the action) that disagrees with the

decision can request review and reconsideration from the Wage and Hour Administrator (See 29 CFR Part 1.8 and 29 CFR Part 7). Requests for review and reconsideration can be submitted via email to dba.reconsideration@dol.gov or by mail to:

Wage and Hour Administrator
U.S. Department of Labor
200 Constitution Avenue, N.W.
Washington, DC 20210

The request should be accompanied by a full statement of the interested party's position and any information (wage payment data, project description, area practice material, etc.) that the requestor considers relevant to the issue.

3) If the decision of the Administrator is not favorable, an interested party may appeal directly to the Administrative Review Board (formerly the Wage Appeals Board). Write to:

Administrative Review Board
U.S. Department of Labor
200 Constitution Avenue, N.W.
Washington, DC 20210.

==========

END OF GENERAL DECISION

"

TECHNICAL SPECIFICATIONS

THIS PAGE INTENTIONALLY LEFT BLANK

SECTION 011000 - SUMMARY

PART 1 - GENERAL

1.1 SUMMARY

A. Section Includes:

1. Project information.
2. Work covered by Contract Documents.
3. Contractor's use of site and premises.
4. Coordination with occupants.
5. Work restrictions.
6. Specification and Drawing conventions.

1.2 PROJECT INFORMATION

A. Project Identification: AASF #2

1. Project Location: AASF#1, Williamstown, Mid Ohio Valley Regional Airport, West Virginia

B. Owner: West Virginia Army National Guard

1. Owner's Representative: Jim Skaggs

C. Engineer: The Thrasher Group, Inc.

1. Engineer’s Representative: Nicole Price, PE

1.3 WORK COVERED BY CONTRACT DOCUMENTS

A. The Work of Project is defined by the Contract Documents and consists of the following:

1. Work of the Project includes repairing erosion that has been caused by ongoing storm events.

B. Type of Contract:

1. Project will be constructed under a single prime contract.

1.4 CONTRACTOR'S USE OF SITE AND PREMISES

A. Limits on Use of Site: Limit use of Project site to areas within the Contract limits indicated. Do not disturb portions of Project site beyond areas in which the Work is indicated.

1. Driveways, Walkways, and Entrances: Keep driveways and entrances serving premises clear and available to Owner, Owner's employees, and emergency vehicles at all times. Do not use these areas for parking or for storage of materials.

B. Condition of Existing Grounds: Maintain portions of existing grounds, landscaping, and hardscaping affected by construction operations throughout construction period. Repair damage caused by construction operations.

1.5 COORDINATION WITH OCCUPANTS

A. Full Owner Occupancy: Owner will occupy site during entire construction period. Cooperate with Owner during construction operations to minimize conflicts and facilitate Owner usage. Perform the Work so as not to interfere with Owner's day-to-day operations. Maintain existing exits unless otherwise indicated.

1.6 WORK RESTRICTIONS

A. Comply with restrictions on construction operations.

B. On-Site Work Hours: Limit work in the existing building to normal business working hours of 7 a.m. to 5 p.m., Monday through Friday, unless otherwise indicated.

C. Existing Utility Interruptions: Do not interrupt utilities serving facilities occupied by Owner or others unless permitted under the following conditions and then only after providing temporary utility services according to requirements indicated:

1. Notify Owner not less than two days in advance of proposed utility interruptions.
2. Obtain Owner’s written permission before proceeding with utility interruptions.

D. Employee Screening: Comply with Owner's requirements for screening of Contractor personnel working on Project site.

1. Maintain list of approved screened personnel with Owner's representative.

E. Dust and Foreign Object Debris (FOD): Contractor shall sweep the area after each work day to limit the dust and foreign debris that could be ability to damage aircraft.

F. Smoking and Controlled Substance Restrictions: Use of tobacco products and other controlled substances on Owner's property is not permitted.

1.7 SPECIFICATION AND DRAWING CONVENTIONS

A. Specification Content: The Specifications use certain conventions for the style of language and the intended meaning of certain terms, words, and phrases when used in particular situations. These conventions are as follows:

1. Imperative mood and streamlined language are generally used in the Specifications. The words "shall," "shall be," or "shall comply with," depending on the context, are implied where a colon (:) is used within a sentence or phrase.
2. Text Color: Text used in the Specifications, including units of measure, manufacturer and product names, and other text may appear in multiple colors or underlined as part of a hyperlink; no emphasis is implied by text with these characteristics.
3. Hypertext: Text used in the Specifications may contain hyperlinks. Hyperlinks may allow for access to linked information that is not residing in the Specifications. Unless otherwise indicated, linked information is not part of the Contract Documents.
4. Specification requirements are to be performed by Contractor unless specifically stated otherwise.

B. Division 00 Contracting Requirements: General provisions of the Contract, including General and Supplementary Conditions, apply to all Sections of the Specifications.

C. Division 01 General Requirements: Requirements of Sections in Division 01 apply to the Work of all Sections in the Specifications.

PART 2 - PRODUCTS (Not Used)

PART 3 - EXECUTION (Not Used)

END OF SECTION 011000

THIS PAGE INTENTIONALLY LEFT BLANK

SECTION 012200 - UNIT PRICES

PART 1 - GENERAL

1.1 SUMMARY

A. Section includes administrative and procedural requirements for unit prices.

1.2 DEFINITIONS

A. Unit price is a price per unit of measurement for materials, equipment, or services, or a portion of the Work, added to or deducted from the Contract Sum by appropriate modification, if the scope of Work or estimated quantities of Work required by the Contract Documents are increased or decreased.

1.3 PROCEDURES

A. Unit prices include all necessary material, plus cost for delivery, installation, insurance, applicable taxes, overhead, and profit.

B. Measurement and Payment: See individual Specification Sections for work that requires establishment of unit prices. Methods of measurement and payment for unit prices are specified in those Sections.

C. Owner reserves the right to reject Contractor's measurement of work-in-place that involves use of established unit prices and to have this work measured, at Owner's expense, by an independent surveyor acceptable to Contractor.

D. List of Unit Prices: A schedule of unit prices is included in Part 3. Specification Sections referenced in the schedule contain requirements for materials described under each unit price.

PART 2 - PRODUCTS (Not Used)

PART 3 - EXECUTION

3.1 SCHEDULE OF UNIT PRICES

A. Unit Price No. 1: Mobilization

1. Description: This item of work shall consist of, but is not limited to, work and operations necessary for the movement of personnel, equipment, material and supplies to and from the project site for work on the project except as provided in the contract as separate pay items. Cost of testing should be made incidental to the mobilization unit price.
2. Unit of Measurement: Lump Sum

B. Unit Price No. 2 – Unclassified Borrow Excavation:

1. Description: This item consists of furnishing, hauling, placing, and compacting acceptable borrow material obtained from sources outside the project excavation limits, as required to construct embankments, backfills, and other fill areas where suitable material generated from on-site excavation is insufficient. Borrow shall not be obtained or placed until all available suitable on-site excavation has been utilized in the work.
2. Unit of Measurement: Cubic yard

C. Unit Price No. 3 – Clearing and Grubbing:

1. Description: This item consists of clearing and grubbing all trees, stumps, roots, brush, shrubs, vegetation, downed timber, logs, rubbish, and other objectionable material from within the designated limits shown on the plans or staked in the field, together with the removal and disposal of all resulting debris. Grubbing includes the removal of stumps and roots to the depth required beneath areas to be excavated, filled, or otherwise improved. Work under this item includes the protection of trees, vegetation, and features designated to remain, the backfilling and compaction of holes left by stump and root removal, and the legal disposal of all cleared and grubbed material off the project or at approved locations.
2. Unit of Measurement: Lump Sum

D. Unit Price No. 4 – 12” HDPE Pipe:

1. Description: Furnishing and installing 12-inch HDPE pipe, complete, including trench excavation, bedding, laying and jointing, connections to structures, backfill, and compaction, as shown on the plans as well as the grass swale if shown on plans. Cost of removal of fence fabric and reinstalling should be made incidental to the linear foot price of the installation of storm pipe.
2. Unit of Measurement: Per linear foot, measured along the pipe centerline between ends or inside faces of structures.

E. Unit Price No. 5 – 18” HDPE Pipe:

1. Description: Furnishing and installing 18-inch HDPE pipe, complete, including trench excavation, bedding, laying and jointing, connections to structures, backfill, and compaction, as shown on the plans as well as the grass swale if shown on plans. Cost of removal of fence fabric and reinstalling should be made incidental to the linear foot price of the installation of storm pipe.
2. Unit of Measurement: Per linear foot, measured along the pipe centerline between ends or inside faces of structures.

F. Unit Price No. 6 – 24” HDPE Pipe:

1. Description: Furnishing and installing 24-inch HDPE pipe, complete, including trench excavation, bedding, laying and jointing, connections to structures, backfill, and compaction, as shown on the plans as well as the grass swale if shown on plans. Cost of removal of fence fabric and reinstalling should be made incidental to the linear foot price of the installation of storm pipe.

2. Unit of Measurement: Per linear foot, measured along the pipe centerline between ends or inside faces of structures.

G. Unit Price No. 7 – Type B Inlet

1. Description: Furnishing and constructing a Type B inlet, complete, including excavation, foundation preparation, the structure, frame and grate, pipe connections, backfill, and compaction.

2. Unit of Measurement: Per each unit, complete and accepted.

H. Unit Price No. 8: Modified Type B Inlet:

1. Description: Furnishing and constructing a Modified Type B inlet per the plan details, complete, including excavation, foundation preparation, the structure, frame and grate, pipe connections, backfill, and compaction.
2. Unit of Measurement: Per each unit, complete and accepted

I. Unit Price No. 9 – Tie Into Existing Inlet:

1. Description: Connecting new pipe to an existing inlet or drainage structure, including locating and exposing the structure, coring or breaking the required opening, installing and grouting the connection, and restoring the structure to a watertight condition.

2. Unit of Measurement: Per each unit, complete and accepted.

J. Unit Price No. 10- Wingwall (18”) W/ Outlet Protection

1. Description: Furnishing and constructing a wingwall at the 18-inch pipe outlet with outlet protection, complete, including excavation, concrete, reinforcing steel, geotextile, and riprap apron. Payment is full compensation for all labor, materials, tools, equipment, and incidentals required to complete the work as shown on the drawings.
2. Unit of Measurement: Per Each, complete and accepted.

K. Unit Price No. 11- Wingwall (12”) W/ Outlet Protection

1. Description: Furnishing and placing a grouted riprap channel lining, complete, including channel excavation and shaping, geotextile filter fabric, riprap, grout, cutoff/toe walls, and weep holes, as shown on the plans.

2. Unit of Measurement: Per Each, complete and accepted.

L. Unit Price No. 12- Concrete Anchors

1. Description: This item consists of furnishing and installing concrete anchors for storm drainage pipe, complete in place, at the locations, spacing, and details shown on the plans or as directed, including all excavation, forming, reinforcing steel, concrete, and backfill necessary to construct each anchor.
2. Unit of Measurement: Each unit completed and accepted.

M. Unit Price No. 13- Grouted Riprap Channel

1. Description: Furnishing and placing a grouted riprap channel lining, complete, including channel excavation and shaping, geotextile filter fabric, riprap, grout, cutoff/toe walls, as shown on the plans.
2. Unit of Measurement: Linear Foot completed and accepted.

N. Unit Price No. 14– Grass Lined Channel:

1. Description: Excavating and shaping the channel to the lines, grades, and cross-section shown on the plans, and furnishing and placing topsoil, seed, mulch, and erosion-control matting as required to establish a vegetated lining.

2. Unit of Measurement: Linear foot completed and accepted.

O. Unit Price No. 15 – Seed and Mulch

1. Description: Furnishing and applying seed, fertilizer, lime, and mulch to disturbed areas, including seedbed preparation, application, and establishment of an acceptable stand of vegetation.

2. Unit of Measurement: Lump sum

END OF SECTION 012200

SECTION 012900 - PAYMENT PROCEDURES

PART 1 - GENERAL

1.1 SUMMARY

A. Section includes administrative and procedural requirements necessary to prepare and process Applications for Payment.

1.2 SCHEDULE OF VALUES

A. Coordination: Coordinate preparation of the schedule of values with Bid Tab.

1. Coordinate line items in the schedule of values with items indicated on bid tab.
2. Submit the schedule of values to Engineer at earliest possible date, but no later than seven days before the date scheduled for submittal of initial Applications for Payment.

B. Format and Content: Use Project Manual table of contents as a guide to establish line items for the schedule of values. Provide at least one line item for each Specification Section.

1. Arrange schedule of values consistent with format of AIA Document G703.
2. Provide a separate line item in the schedule of values for each part of the Work where Applications for Payment may include materials or equipment purchased or fabricated and stored, but not yet installed.

   a. Differentiate between items stored on-site and items stored off-site.
3. Schedule of Values Revisions: Revise the schedule of values when Change Orders or Construction Change Directives result in a change in the Contract Sum. Include at least one separate line item for each Change Order and Construction Change Directive.

1.3 APPLICATIONS FOR PAYMENT

A. Each Application for Payment following the initial Application for Payment shall be consistent with previous applications and payments as certified by Engineer and paid for by Owner.

B. Payment Application Times: The date for each progress payment is indicated in the Agreement between Owner and Contractor. The period of construction work covered by each Application for Payment is the period indicated in the Agreement.

C. Payment Application Times: The period covered by each Application for Payment is one month, ending on the last day of the month.

1. Submit draft copy of Application for Payment seven days prior to due date for review by Architect.

D. Application for Payment Forms: Use AIA Document G702 and AIA Document G703 as form for Applications for Payment.

E. Application Preparation: Complete every entry on form. Notarize and execute by a person authorized to sign legal documents on behalf of Contractor. Engineer will return incomplete applications without action.

1. Entries shall match data on the schedule of values and Contractor's construction schedule. Use updated schedules if revisions were made.
2. Include amounts for work completed following previous Application for Payment, whether or not payment has been received. Include only amounts for work completed at time of Application for Payment.
3. Include amounts of Change Orders and Construction Change Directives issued before last day of construction period covered by application.

F. Transmittal: Submit signed and notarized original copies of each Application for Payment to Engineer via email. Include waivers of lien and similar attachments if required.

1. Transmit each copy with a transmittal form listing attachments and recording appropriate information about application.

G. Waivers of Mechanic's Lien: With each Application for Payment, submit waivers of mechanic's lien from entities lawfully entitled to file a mechanic's lien arising out of the Contract and related to the Work covered by the payment.

1. Submit partial waivers on each item for amount requested in previous application, after deduction for retainage, on each item.
2. When an application shows completion of an item, submit conditional final or full waivers.
3. Owner reserves the right to designate which entities involved in the Work must submit waivers.
4. Submit final Application for Payment with or preceded by conditional final waivers from every entity involved with performance of the Work covered by the application who is lawfully entitled to a lien.
5. Waiver Forms: Submit executed waivers of lien on forms acceptable to Owner.

H. Initial Application for Payment: Administrative actions and submittals that must precede or coincide with submittal of first Application for Payment include the following:

1. List of subcontractors.
2. Schedule of values.
3. Contractor's construction schedule (preliminary if not final).
4. Products list (preliminary if not final).
5. Sustainable design action plans, including preliminary project materials cost data.
6. Schedule of unit prices.
7. Submittal schedule (preliminary if not final).
8. List of Contractor's staff assignments.
9. List of Contractor's principal consultants.
10. Copies of building permits.
11. Copies of authorizations and licenses from authorities having jurisdiction for performance of the Work.
12. Initial progress report.
13. Report of preconstruction conference.
14. Certificates of insurance and insurance policies.

15. Performance and payment bonds.
16. Data needed to acquire Owner's insurance.

I. Application for Payment at Substantial Completion: After Architect issues the Certificate of Substantial Completion, submit an Application for Payment showing 100 percent completion for portion of the Work claimed as substantially complete.

1. Include documentation supporting claim that the Work is substantially complete and a statement showing an accounting of changes to the Contract Sum.
2. This application shall reflect Certificate(s) of Substantial Completion issued previously for Owner occupancy of designated portions of the Work.

J. Final Payment Application: After completing Project closeout requirements, submit final Application for Payment with releases and supporting documentation not previously submitted and accepted, including, but not limited, to the following:

1. Evidence of completion of Project closeout requirements.
2. Insurance certificates for products and completed operations where required and proof that taxes, fees, and similar obligations were paid.
3. Updated final statement, accounting for final changes to the Contract Sum.
4. AIA Document G706.
5. AIA Document G706A.
6. AIA Document G707.
7. Evidence that claims have been settled.
8. Final meter readings for utilities, a measured record of stored fuel, and similar data as of date of Substantial Completion or when Owner took possession of and assumed responsibility for corresponding elements of the Work.
9. Final liquidated damages settlement statement.

PART 2 - PRODUCTS (Not Used)

PART 3 - EXECUTION (Not Used)

END OF SECTION 012900

THIS PAGE INTENTIONALLY LEFT BLANK

SECTION 013100 - PROJECT MANAGEMENT AND COORDINATION

PART 1 - GENERAL

1.1 SUMMARY

A. Section includes administrative provisions for coordinating construction operations on Project including, but not limited to, the following:

1. General coordination procedures.
2. Coordination drawings.
3. RFIs.
4. Digital project management procedures.
5. Project meetings.

B. Related Requirements:

1. Section 017300 "Execution" for procedures for coordinating general installation and field-engineering services, including establishment of benchmarks and control points.

1.2 INFORMATIONAL SUBMITTALS

A. Subcontract List: Prepare a written summary identifying individuals or firms proposed for each portion of the Work, including those who are to furnish products or equipment fabricated to a special design. Include the following information in tabular form:

1. Name, address, telephone number, and email address of entity performing subcontract or supplying products.
2. Number and title of related Specification Section(s) covered by subcontract.
3. Drawing number and detail references, as appropriate, covered by subcontract.

1.3 GENERAL COORDINATION PROCEDURES

A. Coordination: Coordinate construction operations included in different Sections of the Specifications to ensure efficient and orderly installation of each part of the Work. Coordinate construction operations included in different Sections that depend on each other for proper installation, connection, and operation.

1. Schedule construction operations in sequence required to obtain the best results where installation of one part of the Work depends on installation of other components, before or after its own installation.
2. Coordinate installation of different components to ensure maximum performance and accessibility for required maintenance, service, and repair.
3. Make adequate provisions to accommodate items scheduled for later installation.

B. Administrative Procedures: Coordinate scheduling and timing of required administrative procedures with other construction activities to avoid conflicts and to ensure orderly progress of the Work. Such administrative activities include, but are not limited to, the following:

1. Preparation of Contractor's construction schedule.
2. Preparation of the schedule of values.
3. Installation and removal of temporary facilities and controls.
4. Delivery and processing of submittals.
5. Progress meetings.
6. Preinstallation conferences.
7. Project closeout activities.
8. Startup and adjustment of systems.

1.4 REQUEST FOR INFORMATION (RFI)

A. General: Immediately on discovery of the need for additional information, clarification, or interpretation of the Contract Documents, Contractor shall prepare and submit an RFI in the form specified.

1. Engineer will return without response those RFIs submitted to Engineer by other entities controlled by Contractor.
2. Coordinate and submit RFIs in a prompt manner so as to avoid delays in Contractor's work or work of subcontractors.

B. Content of the RFI: Include a detailed, legible description of item needing information or interpretation and the following:

1. Owner name.
2. Owner's Project number.
3. Engineer's Project number.
4. Date.
5. Name of Contractor.
6. RFI number, numbered sequentially.
7. RFI subject.
8. Specification Section number and title and related paragraphs, as appropriate.
9. Drawing number and detail references, as appropriate.
10. Field dimensions and conditions, as appropriate.
11. Contractor's suggested resolution. If Contractor's suggested resolution impacts the Contract Time or the Contract Sum, Contractor shall state impact in the RFI.
12. Contractor's signature.
13. Attachments: Include sketches, descriptions, measurements, photos, Product Data, Shop Drawings, coordination drawings, and other information necessary to fully describe items needing interpretation.

C. RFI Forms: Software-generated form with substantially the same content as indicated above, acceptable to Engineer.

D. Engineer's Action: Engineer will review each RFI, determine action required, and respond. Allow seven days for Engineer's response for each RFI. RFIs received by Engineer after 1:00 p.m. will be considered as received the following working day.

1. The following Contractor-generated RFIs will be returned without action:

    a. Requests for approval of submittals.
    b. Requests for approval of substitutions.
    c. Requests for approval of Contractor's means and methods.
    d. Requests for coordination information already indicated in the Contract Documents.
    e. Requests for adjustments in the Contract Time or the Contract Sum.
    f. Requests for interpretation of Engineer's actions on submittals.
    g. Incomplete RFIs or inaccurately prepared RFIs.

2. Engineer's action may include a request for additional information, in which case Engineer's time for response will date from time of receipt by Engineer of additional information.
3. Engineer's action on RFIs that may result in a change to the Contract Time or the Contract Sum may be eligible for Contractor to submit Change Proposal according to Section 012600 "Contract Modification Procedures."

    a. If Contractor believes the RFI response warrants change in the Contract Time or the Contract Sum, notify Engineer in writing within five days of receipt of the RFI response.

E. On receipt of Engineer's action, update the RFI log and immediately distribute the RFI response to affected parties. Review response and notify Engineer within three days if Contractor disagrees with response.

1.5 PROJECT MEETINGS

A. General: Engineer will schedule and conduct progress meetings and conferences at Project site unless otherwise indicated.

B. Preconstruction Conference: Engineer will schedule and conduct a preconstruction conference before starting construction, at a time convenient to Owner and Engineer.

C. Progress Meetings: Conduct progress meetings at bi weekly intervals.

1. Coordinate dates of meetings with preparation of payment requests.
2. Attendees: In addition to representatives of Owner and Engineer, each contractor, subcontractor, supplier, and other entity concerned with current progress or involved in planning, coordination, or performance of future activities shall be represented at these meetings. All participants at the meeting shall be familiar with Project and authorized to conclude matters relating to the Work.
3. Agenda: Review and correct or approve minutes of previous progress meeting. Review other items of significance that could affect progress. Include topics for discussion as appropriate to status of Project.

4. Minutes: Entity responsible for conducting the meeting will record and distribute the meeting minutes to each party present and to parties requiring information.

a. Schedule Updating: Revise Contractor's construction schedule after each progress meeting where revisions to the schedule have been made or recognized. Issue revised schedule concurrently with the report of each meeting.

PART 2 - PRODUCTS (Not Used)

PART 3 - EXECUTION (Not Used)

END OF SECTION 013100

SECTION 013300 - SUBMITTAL PROCEDURES

PART 1 - GENERAL

1.1 SUMMARY

A. Section Includes:

1. Submittal schedule requirements.
2. Administrative and procedural requirements for submittals.

1.2 DEFINITIONS

A. Action Submittals: Written and graphic information and physical samples that require Engineer's responsive action. Action submittals are those submittals indicated in individual Specification Sections as "action submittals."

B. Informational Submittals: Written and graphic information that do not require Engineer's responsive action. Submittals may be rejected for not complying with requirements. Informational submittals are those submittals indicated in individual Specification Sections as "informational submittals."

1.3 SUBMITTAL FORMATS

A. Submittal Information: Include the following information in each submittal:

1. Project name.
2. Date.
3. Name of Engineer.
4. Name of Contractor.
5. Name of firm or entity that prepared submittal.
6. Names of subcontractor, manufacturer, and supplier.
7. Unique submittal number, including revision identifier. Include Specification Section number with sequential alphanumeric identifier; and alphanumeric suffix for resubmittals.
8. Submittal purpose and description.
9. Drawing number and detail references, as appropriate.
10. Other necessary identification.
11. Remarks.
12. Signature of transmitter.

B. Options: Identify options requiring selection by Engineer.

C. Deviations and Additional Information: On each submittal, clearly indicate deviations from requirements in the Contract Documents, including minor variations and limitations; include relevant additional information and revisions, other than those requested by Engineer on

previous submittals. Indicate by highlighting on each submittal or noting on attached separate sheet.

D. Electronic Submittals: Prepare submittals as PDF package, incorporating complete information into each PDF file. Name PDF file with submittal number.

1.4 SUBMITTAL PROCEDURES

A. Prepare and submit submittals required by individual Specification Sections. Types of submittals are indicated in individual Specification Sections.

1. Email: Prepare submittals as PDF package, and transmit to Engineer by sending via email. Include PDF transmittal form. Include information in email subject line as requested by Engineer.

B. Processing Time: Allow time for submittal review, including time for resubmittals, as follows. Time for review shall commence on **Engineer's** receipt of submittal. No extension of the Contract Time will be authorized because of failure to transmit submittals enough in advance of the Work to permit processing, including resubmittals.

1. Initial Review: Allow 7 days for initial review of each submittal. Allow additional time if coordination with subsequent submittals is required. Engineer will advise Contractor when a submittal being processed must be delayed for coordination.
2. Resubmittal Review: Allow 7 days for review of each resubmittal.

C. Resubmittals: Make resubmittals in same form and number of copies as initial submittal.

D. Distribution: Furnish copies of final submittals to manufacturers, subcontractors, suppliers, fabricators, installers, authorities having jurisdiction, and others as necessary for performance of construction activities. Show distribution on transmittal forms.

E. Use for Construction: Retain complete copies of submittals on Project site. Use only final action submittals that are marked with approval notation from Engineer's action stamp.

1.5 SUBMITTAL REQUIREMENTS

A. Product Data: Collect information into a single submittal for each element of construction and type of product or equipment.

1. If information must be specially prepared for submittal because standard published data are unsuitable for use, submit as Shop Drawings, not as Product Data.
2. Mark each copy of each submittal to show which products and options are applicable.
3. Include the following information, as applicable:
   a. Manufacturer's product specifications.
   b. Statement of compliance with specified referenced standards.
   c. Testing by recognized testing agency.
   d. Application of testing agency labels and seals.
   e. Notation of coordination requirements.
   f. Availability and delivery time information.

4. Submit Product Data before Shop Drawings, and before or concurrent with Samples.

B. Test and Research Reports:
1. Field Test Reports: Submit written reports indicating and interpreting results of field tests performed either during installation of product or after product is installed in its final location, for compliance with requirements in the Contract Documents.
2. Material Test Reports: Submit reports written by a qualified testing agency, on testing agency's standard form, indicating and interpreting test results of material for compliance with requirements in the Contract Documents.
3. Product Test Reports: Submit written reports indicating that current product produced by manufacturer complies with requirements in the Contract Documents. Base reports on evaluation of tests performed by manufacturer and witnessed by a qualified testing agency, or on comprehensive tests performed by a qualified testing agency.
4. Research Reports: Submit written evidence, from a model code organization acceptable to authorities having jurisdiction, that product complies with building code in effect for Project. Include the following information:

a. Name of evaluation organization.
b. Date of evaluation.
c. Time period when report is in effect.
d. Product and manufacturers' names.
e. Description of product.
f. Test procedures and results.
g. Limitations of use.

1.6 CONTRACTOR'S REVIEW

A. Action Submittals and Informational Submittals: Review each submittal and check for coordination with other Work of the Contract and for compliance with the Contract Documents. Note corrections and field dimensions. Mark with approval stamp before submitting to Engineer.

B. Contractor's Approval: Indicate Contractor's approval for each submittal with a uniform approval stamp. Include name of reviewer, date of Contractor's approval, and statement certifying that submittal has been reviewed, checked, and approved for compliance with the Contract Documents.

1. Engineer will not review submittals received from Contractor that do not have Contractor's review and approval.

1.7 ENGINEER'S REVIEW

A. Action Submittals: Engineer will review each submittal, indicate corrections or revisions required, and return it.

1. PDF Submittals: Engineer will indicate, via markup on each submittal, the appropriate action.

B. Informational Submittals: Engineer will review each submittal and will not return it, or will return it if it does not comply with requirements.

C. Partial submittals prepared for a portion of the Work will be reviewed when use of partial submittals has received prior approval from Engineer.

D. Incomplete submittals are unacceptable, will be considered nonresponsive, and will be returned for resubmittal without review.

E. Engineer will return without review submittals received from sources other than Contractor.

F. Submittals not required by the Contract Documents will be returned by Engineer without action.

PART 2 - PRODUCTS (Not Used)

PART 3 - EXECUTION (Not Used)

END OF SECTION 013300

SECTION 017300 - EXECUTION

PART 1 - GENERAL

1.1 SUMMARY

A. Section includes general administrative and procedural requirements governing execution of the Work, including, but not limited to, the following:

1. Construction layout.
2. Field engineering and surveying.
3. Installation of the Work.
4. Progress cleaning.
5. Protection of installed construction.

B. Related Requirements:

1. Section 011000 "Summary" for limits on use of Project site.
2. Section 017700 "Closeout Procedures" for replacing defective work, and final cleaning.

PART 2 - PRODUCTS

2.1 MATERIALS

A. Comply with requirements specified in other Sections.

PART 3 - EXECUTION

3.1 EXAMINATION

A. Existing Conditions: The existence and location of underground and other utilities and construction indicated as existing are not guaranteed. Before beginning sitework, investigate and verify the existence and location of underground utilities and other construction affecting the Work.

3.2 PREPARATION

A. Review of Contract Documents and Field Conditions: Immediately on discovery of the need for clarification of the Contract Documents, submit a request for information to Engineer in accordance with requirements in Section 013100 "Project Management and Coordination."

3.3 CONSTRUCTION LAYOUT

A. Verification: Before proceeding to lay out the Work, verify layout information shown on Drawings, in relation to the property survey and existing benchmarks and existing conditions. If discrepancies are discovered, notify Engineer promptly.

B. Engage a land surveyor experienced in laying out the Work, using the following accepted surveying practices:

1. Establish benchmarks and control points to set lines and levels at each story of construction and elsewhere as needed to locate each element of Project.
2. Establish limits on use of Project site.
3. Establish dimensions within tolerances indicated. Do not scale Drawings to obtain required dimensions.

C. Site Improvements: Locate and lay out site improvements, including pavements, grading, fill and topsoil placement, utility slopes, and rim and invert elevations.

3.4 FIELD ENGINEERING

A. Identification: Owner will identify existing benchmarks, control points, and property corners.

B. Reference Points: Locate existing permanent benchmarks, control points, and similar reference points before beginning the Work. Preserve and protect permanent benchmarks and control points during construction operations.

1. Do not change or relocate existing benchmarks or control points without prior written approval of Engineer. Report lost or destroyed permanent benchmarks or control points promptly. Report the need to relocate permanent benchmarks or control points to Engineer before proceeding.
2. Replace lost or destroyed permanent benchmarks and control points promptly. Base replacements on the original survey control points.

3.5 INSTALLATION

A. Locate the Work and components of the Work accurately, in correct alignment and elevation, as indicated.

B. Repair or remove and replace damaged, defective, or nonconforming Work.

1. Comply with Section 017700 "Closeout Procedures" for repairing or removing and replacing defective Work.

3.6 PROGRESS CLEANING

A. Clean Project site and work areas daily, including common areas. Enforce requirements strictly. Dispose of materials lawfully. Make sure surrounding pavement areas area clean from gravel, soil, concrete, trash, etc.

3.7 PROTECTION AND REPAIR OF INSTALLED CONSTRUCTION

A. Provide final protection and maintain conditions that ensure installed Work is without damage or deterioration at time of Substantial Completion.

B. Repair Work previously completed and subsequently damaged during construction period. Repair to like-new condition.

C. Protection of Existing Items: Provide protection and ensure that existing items to remain undisturbed by construction are maintained in condition that existed at commencement of the Work.

END OF SECTION 017300

THIS PAGE INTENTIONALLY LEFT BLANK

SECTION 017700 - CLOSEOUT PROCEDURES

PART 1 - GENERAL

1.1 SUMMARY

A. Section includes administrative and procedural requirements for Contract closeout, including, but not limited to, the following:

1. Substantial Completion procedures.
2. Final completion procedures.
3. Warranties.
4. Final cleaning.

1.2 SUBSTANTIAL COMPLETION PROCEDURES

A. Contractor's List of Incomplete Items: Prepare and submit a list of items to be completed and corrected (Contractor's "punch list"), indicating the value of each item on the list and reasons why the Work is incomplete.

B. Submittals Prior to Substantial Completion: Complete the following a minimum of 10 days prior to requesting inspection for determining date of Substantial Completion. List items below that are incomplete at time of request.
1. Submit testing records.

C. Inspection: Submit a written request for inspection to determine Substantial Completion a minimum of 10 days prior to date the Work will be completed and ready for final inspection and tests. On receipt of request, Architect will either proceed with inspection or notify Contractor of unfulfilled requirements. Architect will prepare the Certificate of Substantial Completion after inspection or will notify Contractor of items, either on Contractor's list or additional items identified by Architect, that must be completed or corrected before certificate will be issued.

1.3 FINAL COMPLETION PROCEDURES

A. Submittals Prior to Final Completion: Before requesting final inspection for determining Final Completion, complete the following:

1. Submit a final Application for Payment in accordance with Section 012900 "Payment Procedures."
2. Certified List of Incomplete Items: Submit certified copy of Architect's Substantial Completion inspection list of items to be completed or corrected (punch list), endorsed and dated by Architect. Certified copy of the list shall state that each item has been completed or otherwise resolved for acceptance.

B. Inspection: Submit a written request for final inspection to determine acceptance a minimum of 10 days prior to date the Work will be completed and ready for final inspection and tests. On receipt of request, Architect will either proceed with inspection or notify Contractor of

unfulfilled requirements. Architect will prepare a final Certificate for Payment after inspection or will notify Contractor of construction that must be completed or corrected before certificate will be issued.

1.4 LIST OF INCOMPLETE ITEMS

A. Organization of List: Include name and identification of each space and area affected by construction operations for incomplete items and items needing correction including, if necessary, areas disturbed by Contractor that are outside the limits of construction.

1. Organize list of spaces in sequential order,
2. Include the following information at the top of each page:

a. Project name.
b. Date.
c. Name of Architect
d. Name of Contractor.
e. Page number.

3. Submit list of incomplete items in the following format:
a. PDF Electronic File: Architect will return annotated file.

PART 2 - PRODUCTS

PART 3 - EXECUTION

3.1 FINAL CLEANING

A. Perform final cleaning. Conduct cleaning and waste-removal operations to comply with local laws and ordinances and Federal and local environmental and antipollution regulations.

3.2 REPAIR OF THE WORK

A. Complete repair and restoration operations required by Section 017300 "Execution" before requesting inspection for determination of Substantial Completion.

END OF SECTION 017700

VALLEY MILLS USGS MAP 2023

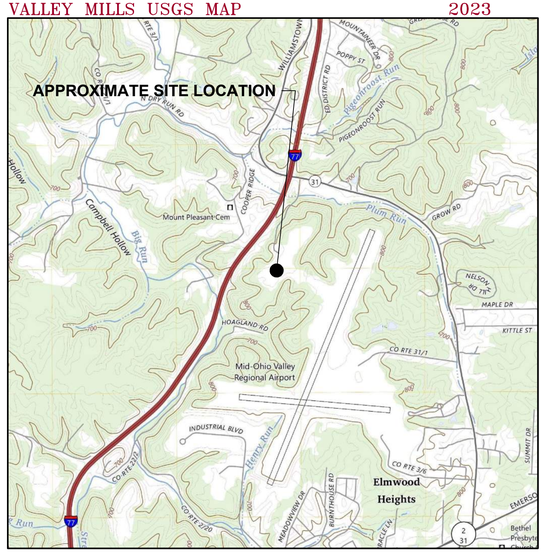

VICINITY MAP SCALE

WEST VIRGINIA ARMY RESERVE NATIONAL GUARD

FOR

WILLIAMSTOWN

T80-11652

WOOD COUNTY, WEST VIRGINIA

AUGUST 2026

SHEET INDEX

SHEET	DESCRIPTION
C1.00	GENERAL NOTES
C2.00	OVERALL SITE PLAN
C2.01-C2.04	SITE PLAN
C3.00-C3.02	DETAILS

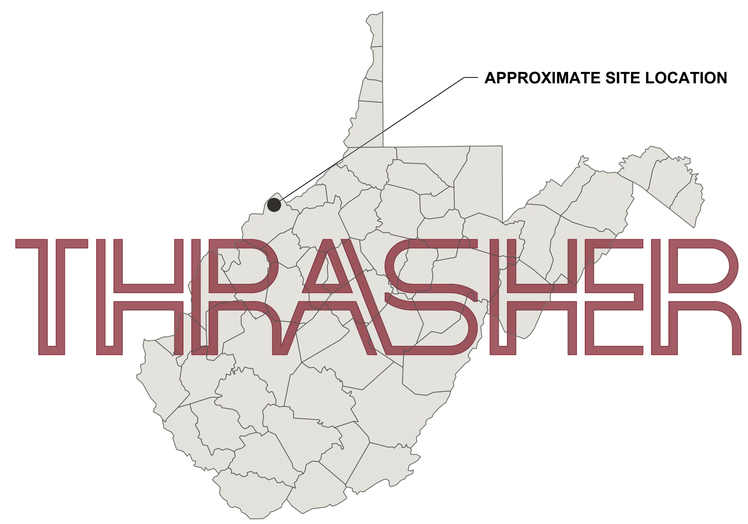

WEST VIRGINIA ARMY NATIONAL GUARD
PHONE: (304) 561-6317
1703 COONSKIN DR.
CHARLESTON, WV 25311-1085

CONTACTS

CLIENT'S CONTACT
WV ARMY NATIONAL GUARD
ATTN: JIM SKAGGS
(304)-719-8745

BRIDGEPORT, WV OFFICE
600 WHITE OAKS BLVD.
BRIDGEPORT, WV 26330
(304) 624-4108
PO BOX 940

ENGINEER
THE THRASHER GROUP
ATTN: NICOLE M. PRICE, PE
(304) 423-5991

THIS PLAN SET DEPICTS THE NECESSARY INFORMATION FOR EROSION AND SEDIMENT CONTROL MEASURES AS REQUIRED BY THE WVDEP FOR STORM WATER PERMITTING PURPOSES.

NICOLE MARIE PRICE REGISTERED 21372 STATE OF WEST VIRGINIA PROFESSIONAL ENGINEER

NICOLE M. PRICE, WV P.E. #21372

☐	ISSUED FOR PERMITS	DATE: _____	BY: _____
☐	ISSUED FOR BID	DATE: _____	BY: _____
☐	ISSUED FOR CONSTRUCTION	DATE: _____	BY: _____

WEST VIRGINIA 811

CONTRACTOR SHALL NOTIFY THE ONE-CALL SYSTEM OF THE INTENDED EXCAVATION OR DEMOLITION NOT LESS THAN FORTY-EIGHT (48) HOURS, EXCLUDING SATURDAYS, SUNDAYS AND LEGAL FEDERAL OR STATE HOLIDAYS, NOR MORE THAN TEN (10) WORK DAYS PRIOR TO THE BEGINNING OF SUCH WORK.
CALL811.COM/811-IN-YOUR-STATE

PLAN REPRODUCTION WARNING

THESE PLANS ARE INTENDED TO BE PLOTTED ON ANSI D (22" X 34") SHEETS. FOR REDUCTIONS, REFER TO GRAPHIC SCALE. THESE PLANS HAVE BEEN CREATED FOR FULL COLOR PLOTTING. ANY SET OF THESE PLANS THAT IS NOT PLOTTED IN FULL COLOR SHALL NOT BE CONSIDERED ADEQUATE FOR CONSTRUCTION PURPOSES. **WARNING**: INFORMATION MAY BE LOST IN COPYING AND/OR GRAY SCALE PLOTTING.

THE INFORMATION CONTAINED HEREIN IS THE SOLE PROPERTY OF THE THRASHER GROUP INC. REPRODUCTION OF THESE DOCUMENTS IN WHOLE OR IN PART, FOR ANY REASON WITHOUT PRIOR WRITTEN PERMISSION, IS STRICTLY PROHIBITED.

CAD FILE: R:\080\T80-11652.00 - WVANG - Williamstown Drainage Repairs\Drawing\T80-11652.00 Cover Sheet.dwg PLOT DATE/TIME: 8/10/2026 9:49 AM USER: nicole.price

GENERAL NOTES

1. ANY CONSTRUCTION METHOD OR MATERIAL THAT IS NOT COVERED IN THESE CONTRACT DOCUMENTS WILL BE COVERED BY TECHNICAL SPECIFICATIONS FROM THE FOLLOWING AGENCIES/PUBLICATIONS: WEST VIRGINIA DEPARTMENT OF ENVIRONMENTAL PROTECTION, WEST VIRGINIA DEPARTMENT OF TRANSPORTATION, DIVISION OF HIGHWAYS STANDARD SPECIFICATIONS, ROADS AND BRIDGES, ADOPTED 2023 AND THE WEST VIRGINIA DEPARTMENT OF TRANSPORTATION, DIVISION OF HIGHWAYS, SUPPLEMENTAL SPECIFICATIONS DATED JANUARY 1 2026, STANDARD DETAILS VOLUME I DATED JANUARY 1, 2016 AND VOLUME II DATED JANUARY 1, 1994. THE CONTRACT DOCUMENTS AND CONTRACT PLANS ARE THE GOVERNING PROVISIONS APPLICABLE TO THIS PROJECT.

2. THE CONTRACTOR SHALL LOCATE AND PROTECT EXISTING UTILITIES AND FACILITIES FROM DAMAGE BY EQUIPMENT OR PERSONNEL. THE CONTRACTOR SHALL CONTACT ALL UTILITY AND FACILITY AGENCIES FOR FIELD MARKING PRIOR TO BEGINNING CONSTRUCTION. THE LOCATIONS OF EXISTING UNDERGROUND UTILITIES ARE SHOWN IN AN APPROXIMATE WAY ONLY AND HAVE NOT BEEN INDEPENDENTLY VERIFIED BY THE OWNER OR ITS REPRESENTATIVE. THE EXISTING UTILITY INFORMATION IS THE BEST AVAILABLE AND MAY NOT BE COMPLETELY ACCURATE OR REPRESENTATIVE OF ACTUAL CONDITIONS. THE CONTRACTOR SHALL DETERMINE THE EXACT LOCATION OF ALL EXISTING UTILITIES BEFORE COMMENCING WORK, AND AGREES TO BE FULLY RESPONSIBLE FOR ANY AND ALL DAMAGES WHICH MIGHT BE OCCASIONED BY THE UNDERGROUND UTILITIES. THE CONTRACTOR SHALL NOTIFY THE ENGINEER AND/OR OWNER IN WRITING, OF ANY EXISTING DAMAGED UTILITIES PRIOR TO BEGINNING CONSTRUCTION. ANY UTILITIES OR FACILITIES DAMAGED DURING THE PROJECT BY THE CONTRACTOR OR EQUIPMENT SHALL BE PROMPTLY REPAIRED AT THE CONTRACTOR'S EXPENSE. HAND DIGGING TO PROTECT UTILITIES FROM DAMAGE SHOULD BE ANTICIPATED.

3. THE CONTRACTOR SHALL HAVE ON THE SITE AT ALL TIMES A EXPERIENCED SUPERINTENDENT CAPABLE OF READING AND UNDERSTANDING THE CONSTRUCTION DOCUMENTS AND THOROUGHLY EXPERIENCED IN THE TYPE OF WORK BEING PERFORMED, AND SHALL BE ABLE TO COORDINATE WITH THE ENGINEER.

4. THE CONTRACTOR SHALL BE RESPONSIBLE FOR OBTAINING A VALID WEST VIRGINIA GENERAL CONTRACTOR'S LICENSE AND PAYING ALL APPLICABLE STATE AND LOCAL TAXES.

5. THE CONTRACTOR IS RESPONSIBLE FOR VERIFICATION OF ALL PLAN AND ELEVATION DIMENSIONS OF THE VARIOUS WORK ITEMS ON THIS PROJECT.

6. IN THE EVENT AN ERROR WITH THE PLANS SEEMS APPARENT, THE MATTER MUST BE TAKEN UP WITH THE ENGINEER FOR CAREFUL REVIEW BEFORE PROCEEDING WITH CONSTRUCTION.

7. THE OWNER RESERVES THE RIGHT TO CONTRACT TO AND PERFORM OTHER OR ADDITIONAL WORK ADJACENT TO AND WITHIN THE WORK AREA COVERED BY THIS CONTRACT. WHEN SEPARATE CONTRACTS ARE LEFT WITHIN THE LIMITS OF ANY ONE PROJECT, EACH CONTRACTOR SHALL CONDUCT THEIR WORK SO AS NOT TO INTERFERE WITH OR HINDER THE PROGRESS OR THE COMPLETION OF THE WORK BEING COMPLETED BY OTHER CONTRACTORS. THE CONTRACTORS WORKING ON THE SAME PROJECT SHALL COOPERATE WITH EACH OTHER AS ORDERED BY THE OWNER AND/OR ENGINEER.

8. ALL DISTURBED AREAS, INCLUDING THE CONTRACTORS STAGING AREA, GRADING LIMITS, WASTE AREAS, ETC. SHALL BE RESTORED TO A SMOOTH LINE AND GRADE WITH POSITIVE DRAINAGE. THE CONTRACTOR SHALL SEED AND MULCH ALL DISTURBED AREAS. THERE WILL BE NO MEASUREMENT FOR PAYMENT OF SEEDING AND MULCHING REQUIRED OUTSIDE THE GRADING LIMITS.

9. ALL BROKEN CONCRETE & ASPHALT, TRASH, RUBBISH, ORGANICS, & OTHER UNSUITABLE MATERIAL SHALL BE DISPOSED OF OFF SITE BY THE CONTRACTOR.

10. ALL LOOSE MATERIALS (DIRT, STONE, PAVEMENT, FORMING, ETC.) MUST BE KEPT WITHIN THE LIMITS OF CONSTRUCTION. WHEN THE CONSTRUCTION BARRIERS ARE MOVED DURING CONSTRUCTION, THE CLEANUP OF THE AREAS OUTSIDE THE BARRIERS SHALL OCCUR IMMEDIATELY.

11. THE CONTRACTOR SHALL MAINTAIN POSITIVE DRAINAGE ON THE PROJECT FOR THE COMPLETE DURATION.

12. ALL WORK PERFORMED AND ALL MATERIAL FURNISHED SHALL CONFORM TO THE LINES, GRADES, CROSS SECTIONS, DIMENSIONS, AND MATERIAL REQUIREMENTS SHOWN ON THE CONSTRUCTION DRAWINGS. THE CONSTRUCTION DRAWINGS SHOW THE CONSTRUCTION LINES, GRADES, DEPTHS AND DIMENSIONS ON WHICH ESTIMATED QUANTITIES ARE BASED. THE CONSTRUCTION LINES, GRADES, DEPTHS AND DIMENSIONS ARE SUBJECT TO VARIATION NECESSARY TO OBTAIN SUBGRADE AND/OR FINAL GRADE SATISFACTORY TO THE ENGINEER.

13. THE CONTRACTOR IS RESPONSIBLE FOR MATERIAL TESTING FOR THE PROJECT.

14. ALL INLETS LOCATED ADJACENT TO THE CONCRETE PAVEMENT SHOULD HAVE GRATES THAT CAN BE BOLTED DOWN.

EROSION & SEDIMENT CONTROL NOTES

1. THE CONTRACTOR SHALL PROVIDE TEMPORARY EROSION AND SEDIMENT CONTROL MEASURES AND OTHER ACTIONS AS REQUIRED BY LOCAL AND STATE REGULATIONS OR REQUESTED BY ENGINEER. THE CONTRACTOR WILL BE RESPONSIBLE FOR MAINTAINING AND/OR MODIFYING SEDIMENT CONTROL MEASURES DURING CONSTRUCTION IN ORDER TO PREVENT EROSION.

2. CONTRACTOR SHALL CLEAN OUT SEDIMENT BEHIND THE SUPER SILT FENCE, SEDIMENT BASINS, AND/OR COMPOST FILTER SOCKS ONCE IT IS ONE THIRD OF THE HEIGHT OF THE FENCE, BASIN, AND/OR SOCK. THE SEDIMENT SHALL BE INCORPORATED INTO THE FILL WITHIN THE DISTURBED AREA.

3. ALL EROSION AND SEDIMENT CONTROL MEASURES SHALL BE INSPECTED, AT MINIMUM, ONCE EVERY 4 CALENDAR DAYS AND WITHIN 24-HOURS AFTER ANY STORM GREATER THAN 0.25-INCHES PER 24-HOUR PERIOD. ANY REQUIRED REPAIRS OR MAINTENANCE SHALL BE MADE IMMEDIATELY.

4. EROSION AND SEDIMENT CONTROL DETAILS NOT SHOWN IN THE PLANS SHALL BE IN ACCORDANCE WITH THE WEST VIRGINIA DEPARTMENT OF ENVIRONMENTAL PROTECTION EROSION AND SEDIMENT CONTROL MANUAL, LATEST EDITION.

5. <u>TEMPORARY STABILIZATION</u>
   DATES: MARCH 1 THROUGH JUNE 15
   SEED: OATS @ 168 LB/AC
   DATES: AUGUST 15 THROUGH NOVEMBER 1
   SEED: RYE @ 120 LB/AC
   FERTILIZER: 10-10-10 @ 400 LB/AC

   FOR STABILIZATION OUTSIDE SEEDING DATES, USE HAY OR STRAW MULCH AT 3 TONS/AC OR AT 2 TONS/AC IF ASPHALT EMULSION IS APPLIED AT 100 GAL/AC.

6. <u>PERMANENT STABILIZATION</u>
   DATES: MARCH, APRIL, & AUGUST
   SEED: KY-31 TALL FESCUE @ 50 LB/AC
   FERTILIZER: 10-20-10 @ 1000 LB/AC
   LIME: 3 TONS/AC OR PER SOIL TEST RESULTS
   MULCH: HAY OR STRAW @ 2 TONS/AC OR @ 1.5 TONS/AC WITH ASPHALT EMULSION @ 125 GAL/AC

7. SEEDBED PREPARATION: AREAS TO BE SEEDED SHALL BE FREE OF ROCKS AND STONES, DISKED TO A DEPTH OF 4-IN TO 6-IN, AND SMOOTHLY GRADED.

8. SEEDING METHOD: SEED MAY BE BROADCAST BY HYDROSEEDER OR MANUALLY AS FOLLOWS: BY HAND WITH A CYCLONE SEEDER, OR FERTILIZER SPREADER. IF A MANUAL METHOD IS USED, DIVIDE THE SEED INTO TWO LOTS AND BROADCAST THE SECOND PERPENDICULAR TO THE FIRST.

9. TOPSOIL SHALL BE REDISTRIBUTED ON ALL DISTURBED AREAS TO BE STABILIZED PRIOR TO SEEDING.

10. STABILIZATION MEASURES SHALL BE INITIATED AS SOON AS PRACTICABLE IN PORTIONS OF THE SITE WHERE CONSTRUCTION ACTIVITIES HAVE TEMPORARILY OR PERMANENTLY CEASED, BUT IN NO CASE MORE THAN 4 DAYS AFTER THE CONSTRUCTION ACTIVITY IN THAT PORTION OF THE SITE HAS PERMANENTLY CEASED.

11. WHERE THE INITIATION OF STABILIZATION MEASURES WITHIN 4 DAYS AFTER CONSTRUCTION ACTIVITY TEMPORARILY OR PERMANENTLY CEASES IS PRECLUDED BY SNOW COVER, STABILIZATION MEASURES SHALL BE INITIATED AS SOON AS CONDITIONS ALLOW.

12. WHERE CONSTRUCTION ACTIVITY WILL RESUME ON A PORTION OF THE SITE WITHIN 14 DAYS FROM WHEN ACTIVITIES CEASED (e.g., THE TOTAL TIME PERIOD THAT CONSTRUCTION ACTIVITY IS TEMPORARILY HALTED IS LESS THAN 14 DAYS), THEN STABILIZATION MEASURES DO NOT HAVE TO BE INITIATED ON THAT PORTION OF THE SITE BY THE FOURTH DAY AFTER CONSTRUCTION ACTIVITIES HAVE TEMPORARILY CEASED.

13. AREAS WHERE THE SEED HAS FAILED TO GERMINATE ADEQUATELY (UNIFORM PERENNIAL VEGETATIVE COVER WITH A DENSITY OF 70%) WITHIN 30 DAYS AFTER SEEDING AND MULCHING, MUST BE RE-SEEDED IMMEDIATELY OR AS SOON AS WEATHER CONDITIONS ALLOW.

QUANTITIES

ITEM NUMBER	DESCRIPTION	UNIT	QUANTITY
01	MOBILIZATION	LS	1
02	UNCLASSIFIED BORROW EXCAVATION	CY	400
03	CLEARING AND GRUBBING	LS	1
04	12" HDPE PIPE	LF	202
05	18" HDPE PIPE	LF	564
06	24" HPDE PIPE	LF	134
07	TYPE B INLET	EA	12
08	MODIFIED TYPE B INLET	EA	6
09	TIE INTO EXISTING INLET	EA	1
10	WINGWALL (18") W/ OUTLET PROTECTION	EA	1
11	WINGWALL (12") W/ OUTLET PROTECTION	EA	1
12	CONCRETE ANCHORS	EA	2
13	GROUTED RIPRAP CHANNEL	LF	275
14	GRASS LINED CHANNEL	LF	30
15	SEED AND MULCH	LS	1

OVERALL LEGEND

555 EXISTING CONTOURS
555 PROPOSED CONTOURS
PROPOSED STORMLINE
PROPOSED DITCH LINE
PROPOSED INLET
PROPOSED WINGWALL

THRASHER
THE THRASHER GROUP INC.
600 WHITE OAKS BLVD,
P.O. BOX 940
BRIDGEPORT, WV 26330
P (304) 624-4108
F (304) 624-7831
www.thethrashergroup.com

THE INFORMATION CONTAINED HEREIN IS THE SOLE PROPERTY OF THE THRASHER GROUP, INC. REPRODUCTION OF THESE DOCUMENTS IN WHOLE, OR IN PART FOR ANY REASON WITHOUT PRIOR WRITTEN PERMISSION IS STRICTLY PROHIBITED.

COPYRIGHT © 2026
THE THRASHER GROUP, INC.

NO.	BY	DATE	DESCRIPTION

WILLIAMSTOWN - WVANG
DRAINAGE REPAIRS
WEST VIRIGNIA ARMY NATIONAL GUARD
WOOD COUNTY, WEST VIRIGNIA

DRAWN: DATE:
CHECKED: DATE:
APPROVED: DATE:

PROJECT No.
T80-11652

GENERAL NOTES

SHEET No.
C1.00

CAD FILE: R:\080\T80-11652.00 - WVANG - Williamstown Drainage Repairs\Drawing\T80-11652.00 General Notes.dwg PLOT DATE/TIME: 8/10/2026 1:35 PM LAYOUT: Layout1 USER: nicole price

THRASHER
THE THRASHER GROUP INC.
600 WHITE OAKS BLVD,
P.O. BOX 940
BRIDGEPORT, WV 26330

P (304) 624-4108
F (304) 624-7831

www.thethrashergroup.com

THE INFORMATION CONTAINED HEREIN IS THE SOLE PROPERTY OF THE THRASHER GROUP, INC. REPRODUCTION OF THESE DOCUMENTS IN WHOLE, OR IN PART FOR ANY REASON WITHOUT PRIOR WRITTEN PERMISSION IS STRICTLY PROHIBITED.

COPYRIGHT © 2026
THE THRASHER GROUP, INC.

NO.	BY	DATE	DESCRIPTION

WILLIAMSTOWN - WVANG DRAINAGE REPAIRS

WEST VIRIGNIA ARMY NATIONAL GUARD

WOOD COUNTY, WEST VIRIGNIA

DRAWN: DATE:
CHECKED: DATE:
APPROVED: DATE:

PROJECT No.
T80-11652☐

OVERALL SITE PLAN

SHEET No.
C2.00☐

CAD FILE: R:\080\T80-11652.00 – WVANG – Williamstown Drainage Repairs\Drawing\T80-11652.00 Site Plan.dwg PLOT DATE/TIME: 8/10/2026 9:07 AM LAYOUT: Overall Site Plan USER: nicole.price

REMOVE EXISTING WINGWALL AND PIPE

FENCE FABRIC CAN BE REMOVED BUT WILL NEED TO BE REINSTALLED AT THE END OF EACH WORKING DAY TO KEEP AIRFIELD SECURE.

CONTRACTOR TO USE UNCLASSIFIED BACKFILL MATERIAL TO BACKFILL ERODED CHANNEL AS SHOWN ON PLANS.

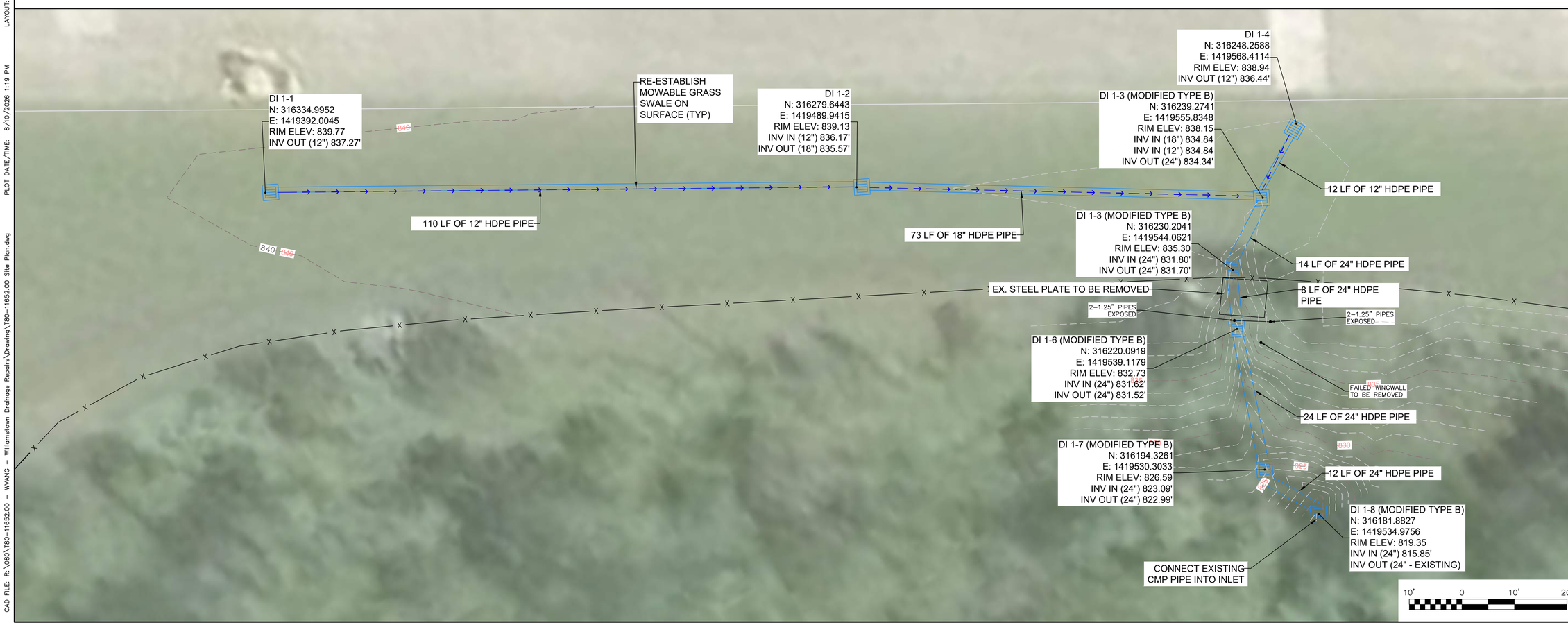

THRASHER
THE THRASHER GROUP INC.
600 WHITE OAKS BLVD,
P.O. BOX 940
BRIDGEPORT, WV 26330

P (304) 624-4108
F (304) 624-7831

www.thethrashergroup.com

THE INFORMATION CONTAINED HEREIN IS THE SOLE PROPERTY OF THE THRASHER GROUP, INC. REPRODUCTION OF THESE DOCUMENTS IN WHOLE, OR IN PART FOR ANY REASON WITHOUT PRIOR WRITTEN PERMISSION IS STRICTLY PROHIBITED.

COPYRIGHT © 2026
THE THRASHER GROUP, INC.

NO.	BY	DATE	DESCRIPTION

WILLIAMSTOWN - WVANG
DRAINAGE REPAIRS
WEST VIRIGNIA ARMY NATIONAL GUARD
WOOD COUNTY, WEST VIRIGNIA

DRAWN: DATE:
CHECKED: DATE:
APPROVED: DATE:

PROJECT No.
T80-11652

SITE PLAN

SHEET No.
C2.01

CAD FILE: R:\080\T80-11652.00 - WVANG - Williamstown Drainage Repairs\Drawing\T80-11652.00 Site Plan.dwg
PLOT DATE/TIME: 8/10/2026 1:19 PM
LAYOUT: Site Plan (2)
USER: nicole price

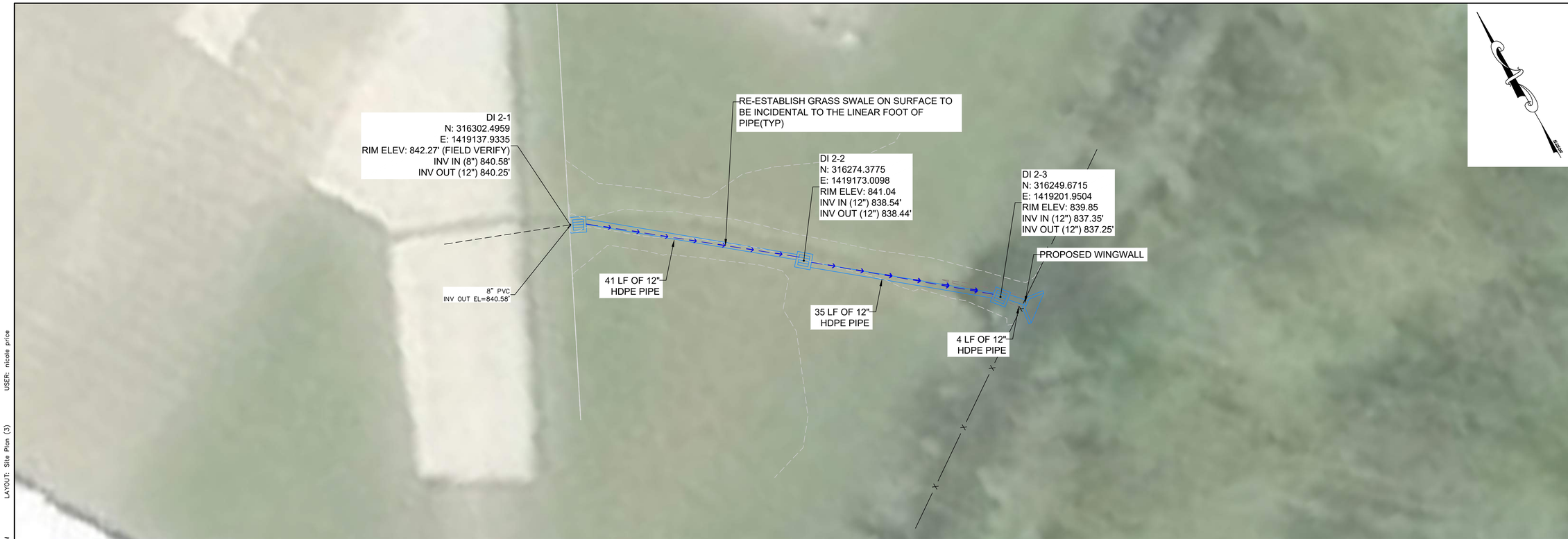

10' 0 10' 20'

THRASHER
THE THRASHER GROUP INC.
600 WHITE OAKS BLVD,
P.O. BOX 940
BRIDGEPORT, WV 26330

P (304) 624-4108
F (304) 624-7831

www.thethrashergroup.com

THE INFORMATION CONTAINED HEREIN IS THE SOLE PROPERTY OF THE THRASHER GROUP, INC. REPRODUCTION OF THESE DOCUMENTS IN WHOLE, OR IN PART FOR ANY REASON WITHOUT PRIOR WRITTEN PERMISSION IS STRICTLY PROHIBITED.

COPYRIGHT © 2026
THE THRASHER GROUP, INC.

NO.	BY	DATE	DESCRIPTION

WILLIAMSTOWN - WVANG
DRAINAGE REPAIRS
WEST VIRIGNIA ARMY NATIONAL GUARD
WOOD COUNTY, WEST VIRIGNIA

DRAWN: DATE:
CHECKED: DATE:
APPROVED: DATE:

PROJECT No.
T80-11652☐

SITE PLAN

SHEET No.
C2.02☐

CAD FILE: R:\080\T80-11652.00 – WVANG – Williamstown Drainage Repairs\Drawing\T80-11652.00 Site Plan.dwg PLOT DATE/TIME: 8/10/2026 1:15 PM LAYOUT: Site Plan (3) USER: nicole price

THRASHER
THE THRASHER GROUP INC.
600 WHITE OAKS BLVD,
P.O. BOX 940
BRIDGEPORT, WV 26330

P (304) 624-4108
F (304) 624-7831

www.thethrashergroup.com

THE INFORMATION CONTAINED HEREIN IS THE SOLE PROPERTY OF THE THRASHER GROUP, INC. REPRODUCTION OF THESE DOCUMENTS IN WHOLE, OR IN PART FOR ANY REASON WITHOUT PRIOR WRITTEN PERMISSION IS STRICTLY PROHIBITED.

COPYRIGHT © 2026
THE THRASHER GROUP, INC.

NO.	BY	DATE	DESCRIPTION

WILLIAMSTOWN - WVANG DRAINAGE REPAIRS
WEST VIRIGNIA ARMY NATIONAL GUARD
WOOD COUNTY, WEST VIRIGNIA

DRAWN: DATE:
CHECKED: DATE:
APPROVED: DATE:

PROJECT No.
T80-11652☐

SITE PLAN

SHEET No.
C2.03☐

CAD FILE: R:\080\T80-11652.00 - WVANG - Williamstown Drainage Repairs\Drawing\T80-11652.00 Site Plan.dwg
PLOT DATE/TIME: 8/10/2026 1:33 PM
LAYOUT: Site Plan (4)
USER: nicole.price

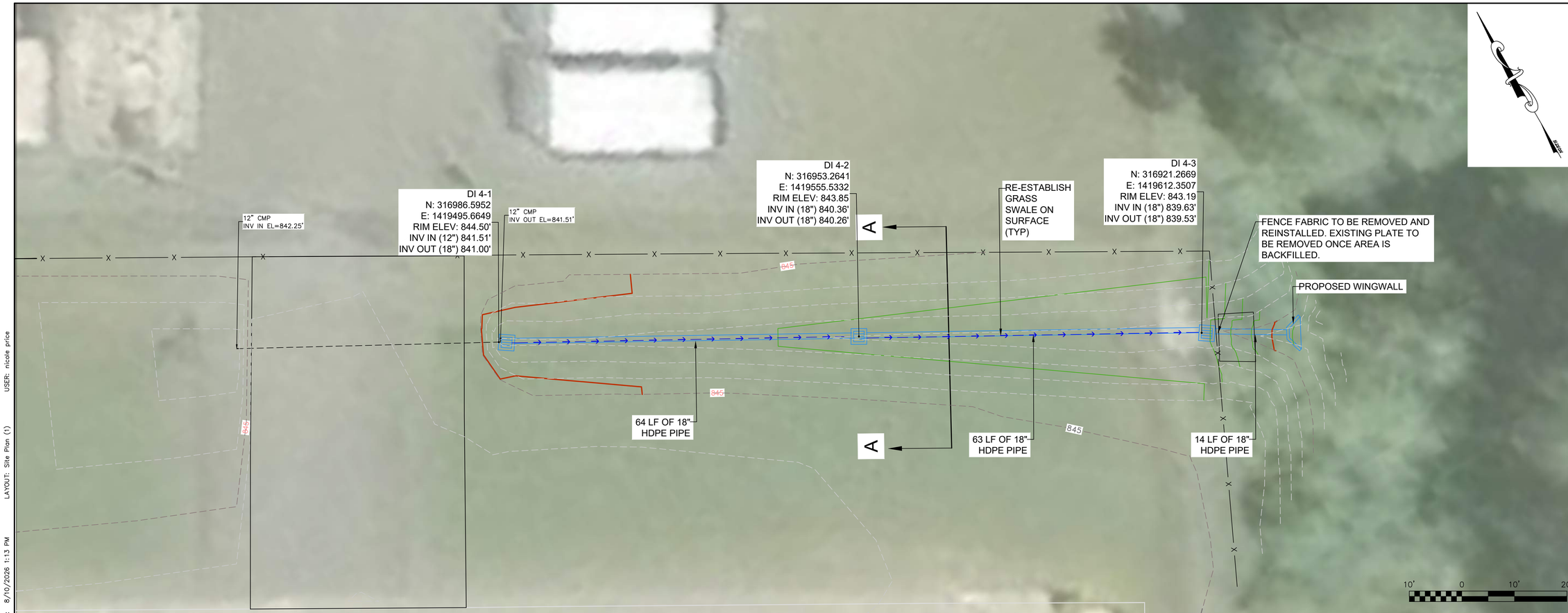

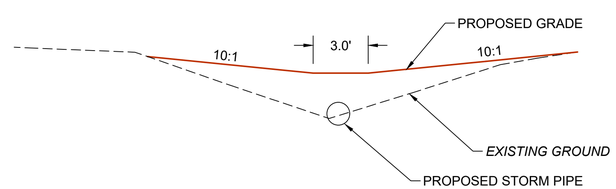

DITCH TYPICAL SECTION A-A
NOT TO SCALE

NOTE: SWALE CONSTRUCTION TO BE INCIDENTAL TO THE CUBIC YARD PRICE FOR UNCLASSIFIED BORROW EXCAVATION

THRASHER
THE THRASHER GROUP INC.
600 WHITE OAKS BLVD,
P.O. BOX 940
BRIDGEPORT, WV 26330

P (304) 624-4108
F (304) 624-7831

www.thethrashergroup.com

THE INFORMATION CONTAINED HEREIN IS THE SOLE PROPERTY OF THE THRASHER GROUP, INC. REPRODUCTION OF THESE DOCUMENTS IN WHOLE, OR IN PART FOR ANY REASON WITHOUT PRIOR WRITTEN PERMISSION IS STRICTLY PROHIBITED.

COPYRIGHT © 2026
THE THRASHER GROUP, INC.

NO.	BY	DATE	DESCRIPTION

WILLIAMSTOWN - WVANG
DRAINAGE REPAIRS
WEST VIRIGNIA ARMY NATIONAL GUARD
WOOD COUNTY, WEST VIRIGNIA

DRAWN: DATE:
CHECKED: DATE:
APPROVED: DATE:

PROJECT No.
T80-11652

SITE PLAN

SHEET No.
C2.04

CAD FILE: R:\080\T80-11652.00 - WVANG - Williamstown Drainage Repairs\Drawing\T80-11652.00 Site Plan.dwg PLOT DATE/TIME: 8/10/2026 1:13 PM LAYOUT: Site Plan (1) USER: nicole price

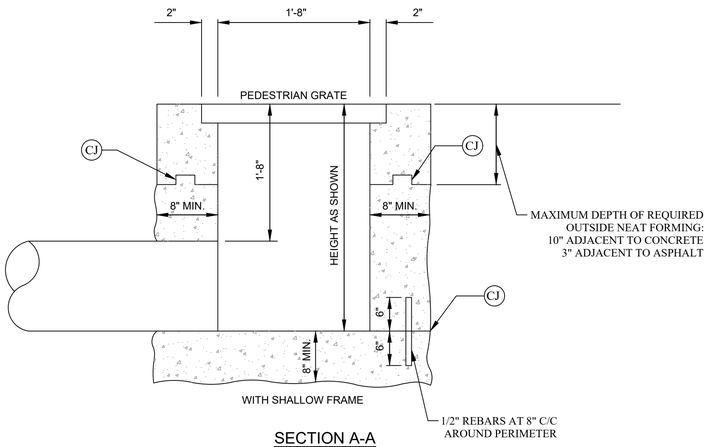

SECTION A-A

NOTE:

1. SHALLOW FRAMES ARE ONLY TO BE USED IN THE LAWN AREAS.

NOTES:

1. UNLESS OTHERWISE SPECIFIED ON THE PLANS, TYPE B INLETS ARE TO BE CONSTRUCTED IN THE SHAPE SHOWN.
2. CONSTRUCTION MAY BE CAST-IN-PLACE, PRECAST IN ONE OR MORE MULTIPLE SECTIONS, OR ANY COMBINATION OF CAST-IN-PLACE AND PRECAST.
3. OPTIONAL CONSTRUCTION JOINTS LABELED "CJ" MAY BE ROUGHENED CONCRETE, KEYED OR DOWELED AS PER THE TYPICAL DETAILS SHOWN HEREIN, OR AS APPROVED BY THE ENGINEER. NON SHRINK GROUT MEETING THE REQUIREMENTS OF SUBSECTION 715.5 OF THE SPECIFICATIONS MAY BE USED TO A DEPTH OF 1/2" FOR LEVELING BETWEEN PRECAST SECTIONS. THICKER DEPTHS WILL BE ALLOWED AS PER THE MANUFACTURER'S RECOMMENDATIONS.
4. THE FINAL INSTALLED TOP SURFACE OF INLET AND GRATE SHALL BE FLUSH WITH ADJACENT FINISHED SURFACES SUCH AS PAVEMENT, GUTTERS, CURBS, AND SIDEWALKS. TOP OF GRATE ELEVATION, IF SHOWN ON THE PLANS, IS FOR INFORMATION ONLY.
5. REBARS ARE TO BE INSTALLED AT THE QUARTER POINTS TO CONNECT CURB TO INLET. REBARS ARE NOT REQUIRED IF CURB IS POURED MONOLITHICALLY WITH THE INLET OR IF TYPE V OR VI MEDIAN IS SPECIFIED ON THE PLANS.
6. THE CONTRACTOR MAY, AT HIS OPTION, OMIT USE OF THE SHALLOW FRAME BY FORMING A LEDGE IN THE CONCRETE.
7. SPECIAL CARE SHALL BE EXERCISED IN FORMING THE 2" WIDE CONCRETE LEDGE TO PROVIDE A SMOOTH, EVEN SURFACE FOR SUPPORTING THE GRATE IF A FRAME IS NOT USED. NO PROJECTIONS SHALL EXIST ON THE GRATE AND THE GRATE SHALL SEAT ON THE LEDGE WITHOUT ROCKING.
8. FIBRE FORM SHALL BE REMOVED PRIOR TO COMPLETION OF THE PROJECT.
9. PC (MINIMUM PIPE COVER) SHALL BE 12" BELOW INLET TOP FOR PIPES PLACED UNDER SIDEWALK OR GRASSED AREA OR 24" BELOW INLET TOP FOR PIPES PLACED UNDER PAVEMENT OR SHOULDER.
10. CURB, IF SPECIFIED, MAY BE EITHER CONCRETE PLACED ON THE INLET BACKWALL AS DETAILED HEREIN OR AN APPROVED CURB BOX AS MANUFACTURED WITH THE GRATE AND FRAME. DIMENSIONS OF THE CURB BOX SHOULD REASONABLY CONFORM TO THE STANDARD CURB AS SPECIFIED IN THE PLANS. THE CURB WILL BE PAID FOR PER SECTION 610, IN EITHER CASE.
11. THIS INLET SHALL NOT BE PLACED IN A PEDESTRIAN CROSS WALK.
12. THE MINIMUM DISTANCE FROM THE TOP OF ANY PIPE OPENING TO ANY CONSTRUCTION JOINT ABOVE THE OPENING SHALL BE FOUR (4) INCHES.
13. THE NUMBER AND LOCATION OF PIPE OPENINGS SHALL BE AS SHOWN IN THE PLANS. THE CONTRACTOR AT NO ADDITIONAL COST, SHALL BE RESPONSIBLE FOR ANY TEMPORARY BRACING REQUIRED TO TRANSPORT PRECAST INLET SECTIONS DUE TO MULTIPLE OPENINGS.

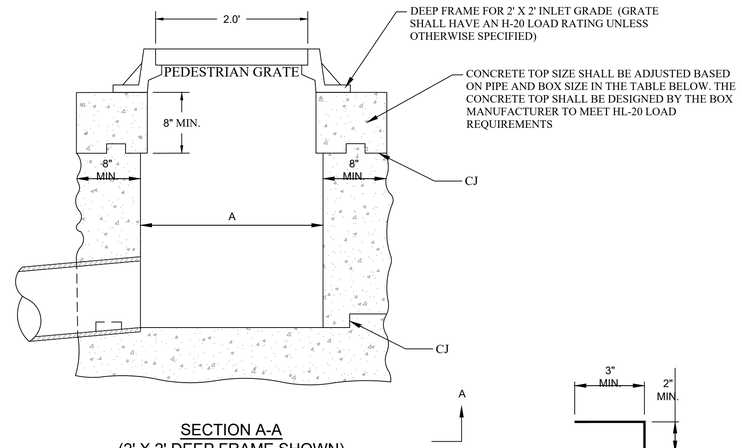

SECTION A-A
(2' X 2' DEEP FRAME SHOWN)

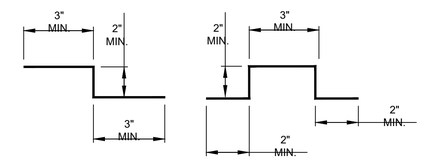

CONSTRUCTION JOINT DETAILS

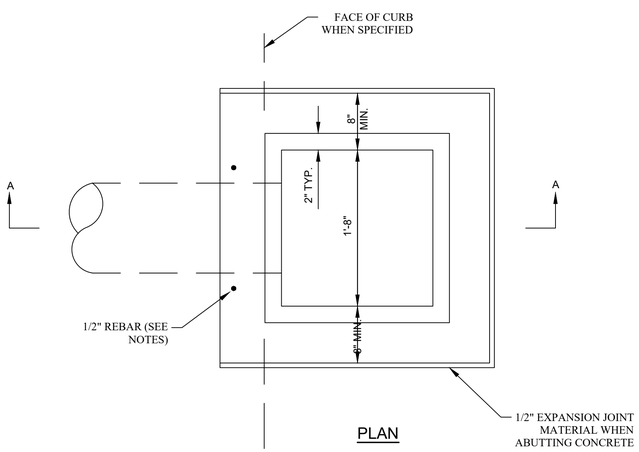

PLAN

NOTE:

1. SQUARE INLET STRUCTURE SHOWN. SQUARE OR CIRCULAR STYLE MAY BE USED.

TYPE B INLET
NOT TO SCALE

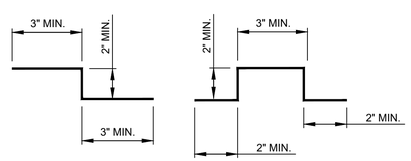

CONSTRUCTION JOINT DETAILS

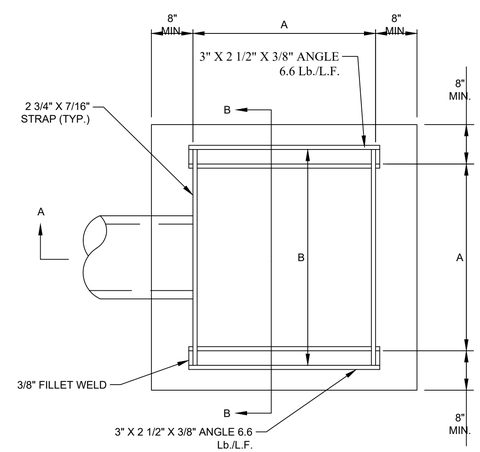

PLAN

NOTES:

1. OPTIONAL CONSTRUCTION JOINTS LABELED "CJ" MAY BE KEYED OR DOWELED AS PER THE TYPICAL DETAILS SHOWN HEREIN OR AS APPROVED BY THE ENGINEER.

DIMENSIONS					
PIPE SIZE	A	B	C	D	H (min)
18"	2'-8"	3'-2"	2'-7 3/4"	3'-1 3/4"	2'-0"
21"	2'-8"	3'-2"	2'-7 3/4"	3'-1 3/4"	2'-3"
24"	2'-8"	3'-2"	2'-7 3/4"	3'-1 3/4"	2'-6"
27"	3'-0"	3'-6"	2'-11 3/4"	3'-5 3/4"	2'-9"
30"	3'-6"	4'-0"	3'-5 3/4"	3'-11 3/4"	3'-0"
33"	3'-9"	4'-3"	3'-8 3/4"	4'-2 3/4"	3'-3"
36"	4'-0"	4'-6"	3'-11 3/4"	4'-5 3/4"	3'-6"
42"	4'-6"	5'-0"	4'-5 3/4"	4'-11 3/4"	4'-0"
48"	5'-0"	5'-6"	4'-11 3/4"	5'-5 3/4"	4'-6"

MODIFIED TYPE G INLET WITH
2' X 2' INLET GRATE
NOT TO SCALE

THRASHER
THE THRASHER GROUP INC.
600 WHITE OAKS BLVD,
P.O. BOX 940
BRIDGEPORT, WV 26330

P (304) 624-4108
F (304) 624-7831

www.thethrashergroup.com

THE INFORMATION CONTAINED HEREIN IS THE SOLE PROPERTY OF THE THRASHER GROUP, INC. REPRODUCTION OF THESE DOCUMENTS IN WHOLE, OR IN PART FOR ANY REASON WITHOUT PRIOR WRITTEN PERMISSION IS STRICTLY PROHIBITED.

COPYRIGHT © 2026
THE THRASHER GROUP, INC.

NO.	BY	DATE	DESCRIPTION

WILLIAMSTOWN - WVANG
DRAINAGE REPAIRS
WEST VIRIGNIA ARMY NATIONAL GUARD
WOOD COUNTY, WEST VIRIGNIA

DRAWN: DATE:
CHECKED: DATE:
APPROVED: DATE:

PROJECT No.
T80-11652

DETAILS

SHEET No.
C3.00

CAD FILE: R:\080\T80-11652.00 - WVANG - Williamstown Drainage Repairs\Drawing\T80-11652-Details.dwg PLOT DATE/TIME: 8/10/2026 8:15 AM LAYOUT: Layout1 USER: nicole.price

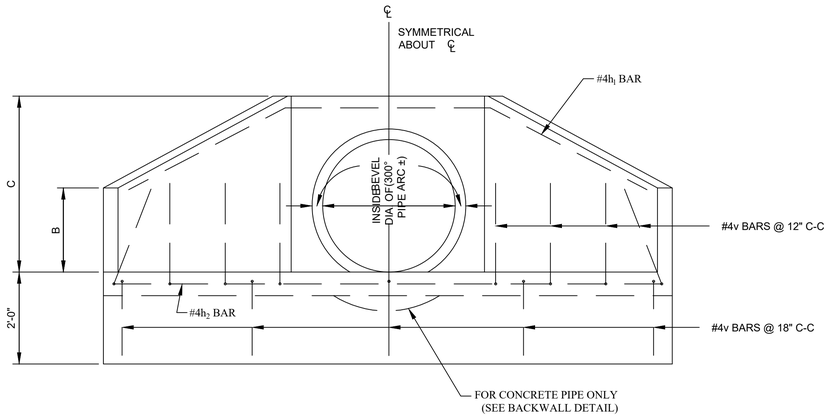

ELEVATION

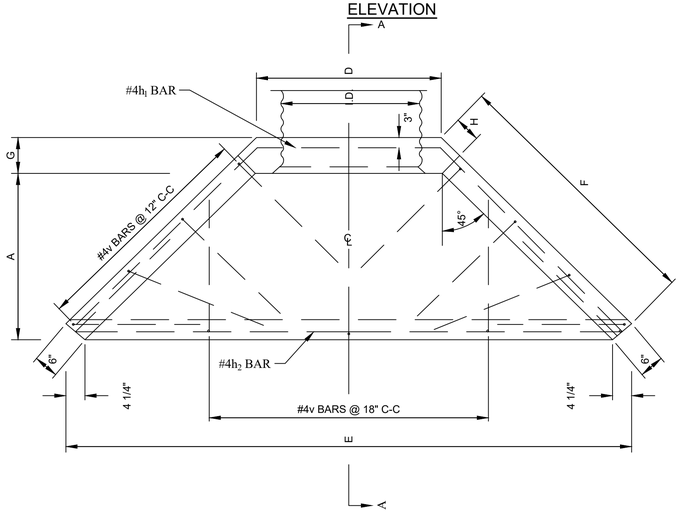

PLAN VIEW

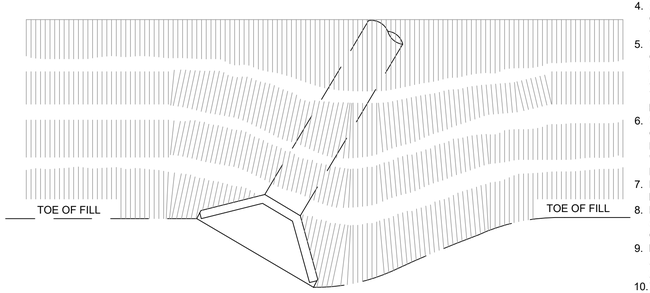

CONSTRUCTION DETAIL - SKEWED PIPE

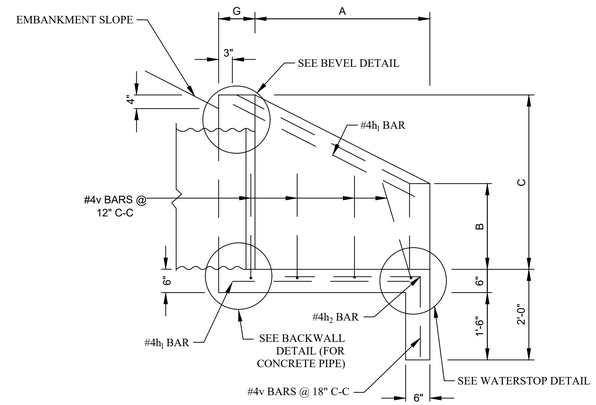

SECTION A-A

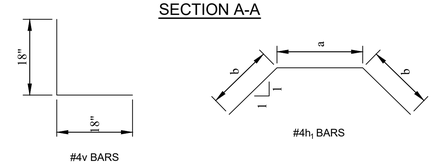

DETAIL OF BENT BARS

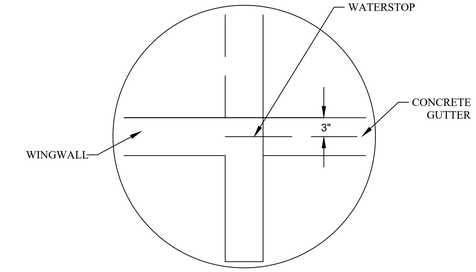

WATERSTOP DETAIL

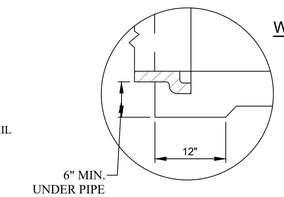

BACKWALL DETAIL
(FOR CONCRETE PIPE)

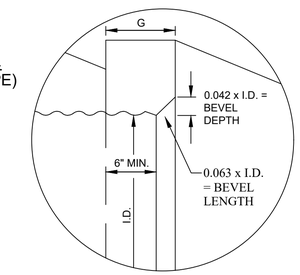

BEVEL DETAIL

NOTES:

1. ALL CONCRETE SHALL BE CLASS B CONCRETE.
2. REINFORCING STEEL SHALL BE NEW BILLET STEEL AND SHALL CONFORM TO THE REQUIREMENTS OF 709.1 OF THE SPECIFICATIONS.
3. THE COVERING FOR REINFORCING STEEL SHALL BE 2" MEASURED FROM THE SURFACE OF THE CONCRETE TO THE FACE OF THE BAR, UNLESS OTHERWISE NOTED ON THE PLANS. REINFORCEMENT IN MEMBERS WHERE CONCRETE IS DEPOSITED ON THE GROUND SHALL HAVE 3" OF CONCRETE FROM THE FACE OF THE BAR TO THE GROUND CONTACT SURFACE.
4. ALL EXPOSED EDGES SHALL HAVE A 3/4" x 45° CHAMFER. CHAMFER ON VERTICAL EDGES SHALL BE CONTINUED A MINIMUM OF ONE FOOT BELOW FINISHED GROUND LINE.
5. WHEN WINGWALLS ARE PLACED ON THE INLET END OF CORRUGATED METAL OR STRUCTURAL PLATE PIPE, A BEVEL SHALL BE USED AT THE INLET OPENING. THE END OF THE PIPE SHALL BE SET IN FROM THE FACE OF THE WALL AS SHOWN ON THE "BEVEL DETAIL", AND THE BEVEL CONSTRUCTED FROM THE END OF THE PIPE TO THE FACE OF THE WALL.
6. WHEN WINGWALLS ARE PLACED ON THE INLET END OF CONCRETE PIPE, THE "BELL" OR "GROOVE" OF THE PIPE SHALL BE PLACED IN THE WALL, AND THE INSIDE OF THE "BELL" OR "GROOVE" SHALL BE FILLED WITH CONCRETE UP TO THE FLOW LINE.
7. BEVELS ARE NOT REQUIRED ON OUTLET WINGWALLS OR ON INLET WINGWALLS FOR CONCRETE PIPE.
8. KEYED OR DOWELED TYPE CONSTRUCTION JOINTS, ACCEPTABLE TO THE ENGINEER, MAY BE USED DURING CONSTRUCTION.
9. IF EMBANKMENT SLOPE ABOVE WINGWALLS IS FLATTER THAN 2:1, PROVIDE WINGS FOR 2:1 SLOPE AND WARP EMBANKMENT TO 2:1 SLOP AT WINGWALL.
10. THE PAY QUANTITY FOR WINGWALLS, CONSTRUCTED IN ACCORDANCE WITH THE DETAILS HEREIN, WILL BE THE CUBIC YARDS OF CLASS B CONCRETE SPECIFIED ON THIS SHEET. COST OF ALL REINFORCING STEEL SHALL BE INCLUDED IN THE UNIT PRICE BID FOR CLASS B CONCRETE.
11. WATERSTOP MEETING THE REQUIREMENTS OF 708.10 SHALL BE PLACED AS SHOWN WHEN CONCRETE GUTTER IS TO ABUT THE WINGWALL.

INSIDE DIA. OF PIPE	SLOPE OF FILL	DIMENSIONS								REINFORCEMENT							QUANTITIES		
		A	B	C	D	E	F	G	H	MARK	SIZE	NO. OF BARS	LENGTH a	LENGTH b	LENGTH TOTAL	TYPE	CONC. (RCP) C.Y.	CONC. (CMP or SPP) C.Y.	STEEL LBS.
12"/15"	2:1	*2'-0"	0'-10"	1'-11"	2'-0"	6'-7 1/2"	3'-3 1/4"	*0'-8"	*0'-5 3/8"	h_1	#4	2	1'-10"	3'-2 1/2"	8'-3"	BENT	0.61	0.62	41.2
		†2'-2"						†0'-6"	†0'-2 1/2"	h_2	#4	1			6'-1"	ST.			
		BEVEL: DEPTH = 3/4" - LENGTH = 1"								v	#4	13			3'-0"	BENT			
18"	2:1	*2'-0"	1'-1"	2'-2"	2'-3"	6'-10 1/2"	3'-3 1/4"	*0'-8"	*0'-5 3/8"	h_1	#4	2	2'-1"	3'-2 1/2"	8'-6"	BENT	0.67	0.68	41.8
		†2'-2"						†0'-6"	†0'-2 1/2"	h_2	#4	1			6'-4"	ST.			
		BEVEL: DEPTH = 3/4" - LENGTH = 1 1/4"								v	#4	13			3'-0"	BENT			
24"	2:1	*2'-8"	1'-4"	2'-9"	2'-11"	8'-10 1/2"	4'-2 1/2"	*0'-8"	*0'-5 3/8"	h_1	#4	2	2'-9"	4'-1 1/2"	11'-0"	BENT	1.01	1.02	52.4
		†2'-10"						†0'-6"	†0'-2 1/2"	h_2	#4	1			8'-4"	ST.			
		BEVEL: DEPTH = 1" - LENGTH = 1 1/2"								v	#4	16			3'-0"	BENT			
30"	2:1	*3'-1"	1'-7"	3'-3"	3'-5"	10'-4 1/2"	4'-11"	*0'-9"	*0'-6 3/4"	h_1	#4	2	3'-3"	4'-10 1/2"	13'-0"	BENT	1.32	1.37	58.1
		†3'-4"						†0'-6"	†0'-2 1/2"	h_2	#4	1			9'-10"	ST.			
		BEVEL: DEPTH = 1 1/4" - LENGTH = 2"								v	#4	17			3'-0"	BENT			
36"	2:1	*3'-9"	1'-10"	3'-10"	4'-1"	12'-4 1/2"	5'-10 1/2"	*0'-9"	*0'-6 3/4"	h_1	#4	2	3'-11"	5'-9 1/2"	15'-6"	BENT	1.79	1.86	70.8
		†4'-0"						†0'-6"	†0'-2 1/2"	h_2	#4	1			11'-10"	ST.			
		BEVEL: DEPTH = 1 1/2" - LENGTH = 2 1/4"								v	#4	21			3'-0"	BENT			

* DIMENSIONS FOR INLET WINGWALLS ON CORRUGATED METAL PIPE (TO ACCOMMODATE THE BEVEL).
† DIMENSIONS FOR INLET WINGWALLS ON CONCRETE PIPE AND ALL OUTLET WINGWALLS.

THRASHER
THE THRASHER GROUP INC.
600 WHITE OAKS BLVD,
P.O. BOX 940
BRIDGEPORT, WV 26330
P (304) 624-4108
F (304) 624-7831
www.thethrashergroup.com

THE INFORMATION CONTAINED HEREIN IS THE SOLE PROPERTY OF THE THRASHER GROUP, INC. REPRODUCTION OF THESE DOCUMENTS IN WHOLE, OR IN PART FOR ANY REASON WITHOUT PRIOR WRITTEN PERMISSION IS STRICTLY PROHIBITED.
COPYRIGHT © 2026
THE THRASHER GROUP, INC.

NO.	BY	DATE	DESCRIPTION

WILLIAMSTOWN - WVANG DRAINAGE REPAIRS
WEST VIRIGNIA ARMY NATIONAL GUARD
WOOD COUNTY, WEST VIRIGNIA

DRAWN: DATE:
CHECKED: DATE:
APPROVED: DATE:
PROJECT No. T80-11652☐

DETAILS

SHEET No. C3.01☐

CAD FILE: R:\080\T80-11652.00 - WVANG - Williamstown Drainage Repairs\Drawing\T80-11652-Details.dwg PLOT DATE/TIME: 8/10/2026 8:15 AM LAYOUT: Layout1 (2) USER: nicole price

1. WATERSTOP SHALL BE 5" WIDE MIN; WEB MIN. THICKNESS 3/16"; END SECTION AND/OR RIBS LESS THAN 1.67 WEB THICKNESS.
2. THE WATERSTOP DIAGRAMS ARE FOR INFORMATIONAL PURPOSES ONLY. ALL WATERSTOPS SHALL CONFORM TO THE GENERAL SHAPE SHOWN AND MEET THE REQUIREMENTS OF SECTION 708.10 OF THE WVDOH SPECIFICATIONS.
3. THE "CONCRETE GUTTER TREATMENT AT INLETS" DETAIL AS SHOWN IS FOR TRANSITIONING A V DITCH SECTION TO THE WIDTH OF THE INLET. THE 15' LENGTH IS TO BE USED TO MAKE THIS TRANSITION REGARDLESS OF THE WIDTH OF THE APPROACH DITCH.

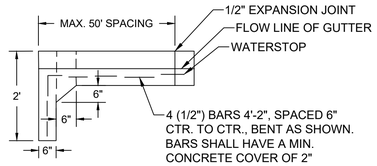

CUT-OFF WALL
NOT TO SCALE

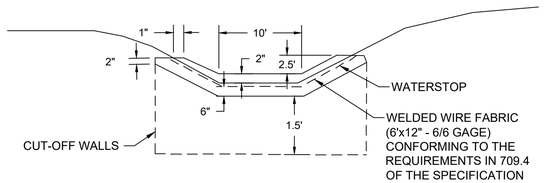

CONCRETE GUTTER
NOT TO SCALE

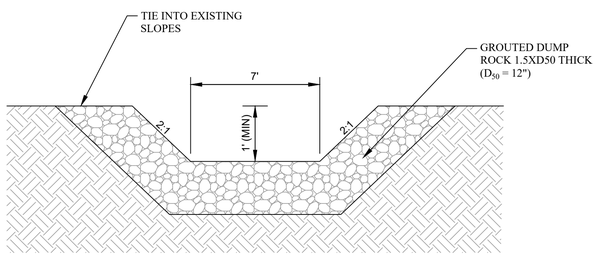

GROUTED DITCH
NOT TO SCALE

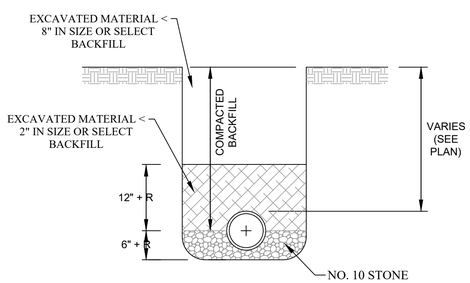

BEDDING FOR STORM SEWER PIPE

CULVERT DISCHARGE

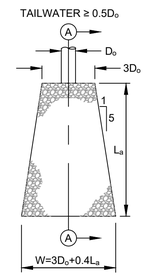

PLAN VIEW

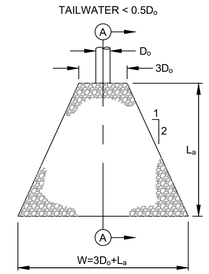

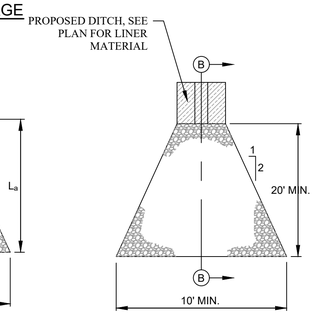

PLAN VIEW

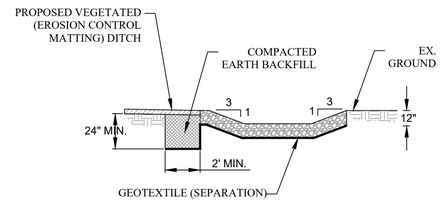

SECTION B-B VIEW - VEGETATED DITCH

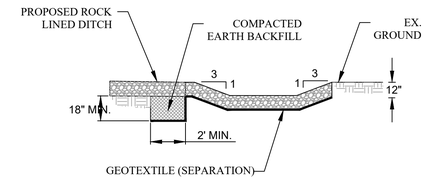

SECTION B-B VIEW - ROCK LINED DITCH

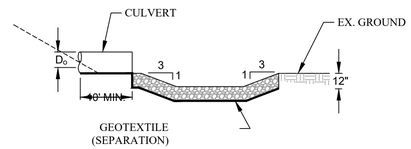

SECTION A-A VIEW

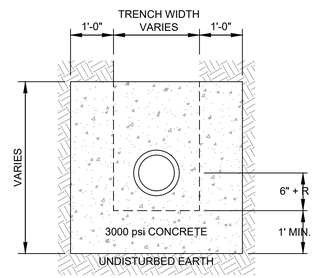

SECTION VIEW

OUTLET PROTECTION
NOT TO SCALE

NOTES:

1. CONTRACTOR SHALL USE TAILWATER < 0.5D UNLESS OTHERWISE SPECIFIED ON PLANS.
2. GEOTEXTILE (SEPARATION) SHALL BE BURIED BENEATH THE PROPOSED CULVERT A MINIMUM ON TEN (10) FEET MEASURED FROM WHERE THE CULVERT DAYLIGHTS.
3. CULVERT SLOPE SHALL BE FIELD ADJUSTED AS NEEDED TO MINIMIZE THE WATER OUTFALL HEIGHT. (SLOPE SHALL NOT BE LESS THAN THE MINIMUM SLOPE SHOWN IN PROPOSED CULVERT DETAIL OR NOTED ON PLANS.)
4. THE WATER OUTFALL HEIGHT SHALL NOT EXCEED TWO (2) FEET.
5. THE MAXIMUM AGGREGATE SIZE SHALL BE TWELVE (12) INCH.
6. LENGTH OF OUTLET PROTECTION SHALL EXTEND BEYOND THE TOE OF ANY FILL SLOPE SO AS TO DISCHARGE ONTO UNDISTURBED GROUND.

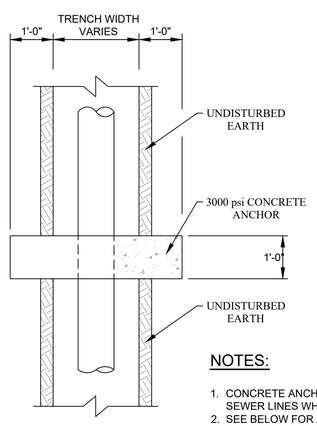

PLAN VIEW

NOTES:

1. CONCRETE ANCHORS SHALL BE INSTALLED ON ALL STORM SEWER LINES WHERE THE SLOPE IS 18% OR GREATER.
2. SEE BELOW FOR ANCHOR SPACING BASED ON SLOPE:
   2.1. < 18% - NO ANCHORS NECESSARY
   2.2. 18% TO 35% - MAX SPACING 30' C-C
   2.3. 35% TO 50% - MAX SPACING 20' C-C
   2.4. > 50% - MAX SPACING 15' C-C

REINFORCED CONCRETE ANCHOR
NOT TO SCALE

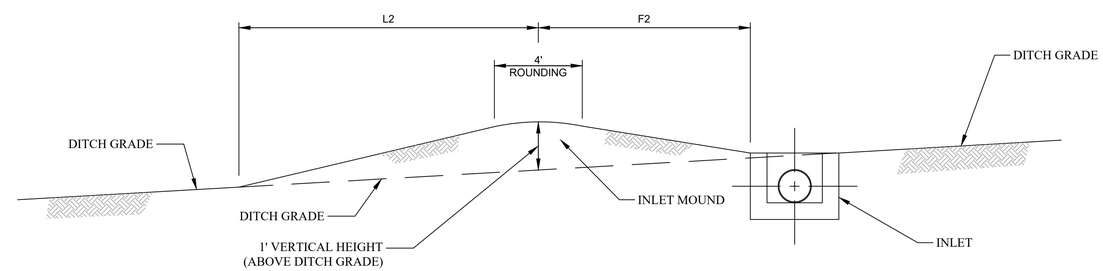

MOUNDING DETAIL DITCHES

INLET MOUNDING TABLE			
DITCH GRADE (%)		L1 HORIZONTAL LETNGTH (FT)	F2, HORIZONTAL LENGTH (FT)
FROM	TO		
0	3	10	15
3	5	9	20
5	7.5	8	40
7.5	UP	SPECIAL DESIGN	SPECIAL DESIGN

THRASHER
THE THRASHER GROUP INC.
600 WHITE OAKS BLVD,
P.O. BOX 940
BRIDGEPORT, WV 26330
P (304) 624-4108
F (304) 624-7831
www.thethrashergroup.com

THE INFORMATION CONTAINED HEREIN IS THE SOLE PROPERTY OF THE THRASHER GROUP, INC. REPRODUCTION OF THESE DOCUMENTS IN WHOLE, OR IN PART FOR ANY REASON WITHOUT PRIOR WRITTEN PERMISSION IS STRICTLY PROHIBITED.

COPYRIGHT © 2026
THE THRASHER GROUP, INC.

NO.	BY	DATE	DESCRIPTION

WILLIAMSTOWN - WVANG DRAINAGE REPAIRS
WEST VIRIGNIA ARMY NATIONAL GUARD
WOOD COUNTY, WEST VIRIGNIA

DRAWN: DATE:
CHECKED: DATE:
APPROVED: DATE:

PROJECT No. T80-11652

DETAILS

SHEET No. C3.02

CAD FILE: R:\080\T80-11652.00 - WVANG - Williamstown Drainage Repairs\Drawing\T80-11652-Details.dwg PLOT DATE/TIME: 8/10/2026 1:34 PM LAYOUT: Layout1 (3) USER: nicole price

Agency Adjutant General's Office
REQ.P.O# CRFQ 0603 ADJ2700000020

BID BOND

KNOW ALL MEN BY THESE PRESENTS, That we, the undersigned, McClanahan Construction Company, LLC of Poca, WV, as Principal, and Fidelity and Deposit Company of Maryland of Schaumburg, IL, a corporation organized and existing under the laws of the State of IL with its principal office in the City of Schaumburg, as Surety, are held and firmly bound unto the State of West Virginia, as Obligee, in the penal sum of Five Percent of Amount Bid ($ 5%) for the payment of which, well and truly to be made, we jointly and severally bind ourselves, our heirs, administrators, executors, successors and assigns.

The Condition of the above obligation is such that whereas the Principal has submitted to the Purchasing Section of the Department of Administration a certain bid or proposal, attached hereto and made a part hereof, to enter into a contract in writing for Williamstown Drainage Repairs (Construction) - CRFQ 0603 ADJ2700000020- According to Plans and Specifications

NOW THEREFORE,

(a) If said bid shall be rejected, or

(b) If said bid shall be accepted and the Principal shall enter into a contract in accordance with the bid or proposal attached hereto and shall furnish any other bonds and insurance required by the bid or proposal, and shall in all other respects perform the agreement created by the acceptance of said bid, then this obligation shall be null and void, otherwise this obligation shall remain in full force and effect. It is expressly understood and agreed that the liability of the Surety for any and all claims hereunder shall, in no event, exceed the penal amount of this obligation as herein stated.

The Surety, for the value received, hereby stipulates and agrees that the obligations of said Surety and its bond shall be in no way impaired or affected by any extension of the time within which the Obligee may accept such bid, and said Surety does hereby waive notice of any such extension.

WITNESS, the following signatures and seals of Principal and Surety, executed and sealed by a proper officer of Principal and Surety, or by Principal individually if Principal is an individual, this 10th day of September, 2026.

Principal Seal

McClanahan Construction Company, LLC
(Name of Principal)

By Bruce D. McClanahan
(Must be President, Vice President, or Duly Authorized Agent)

Bruce D. McClanahan Managing Member
(Title)

Surety Seal

Fidelity and Deposit Company of Maryland
(Name of Surety)

By: Patricia A. Moye
Patricia A. Moye, WV Resident Agent Attorney-in-Fact

IMPORTANT – Surety executing bonds must be licensed in West Virginia to transact surety insurance, must affix its seal, and must attach a power of attorney with its seal affixed.

ZURICH AMERICAN INSURANCE COMPANY
COLONIAL AMERICAN CASUALTY AND SURETY COMPANY
FIDELITY AND DEPOSIT COMPANY OF MARYLAND
POWER OF ATTORNEY

KNOW ALL MEN BY THESE PRESENTS: That the ZURICH AMERICAN INSURANCE COMPANY, a corporation of the State of New York, the COLONIAL AMERICAN CASUALTY AND SURETY COMPANY, a corporation of the State of Illinois, and the FIDELITY AND DEPOSIT COMPANY OF MARYLAND a corporation of the State of Illinois (herein collectively called the "Companies"), by Thomas O. McClellan, Vice President, in pursuance of authority granted by Article V, Section 8, of the By-Laws of said Companies, which are set forth on the reverse side hereof and are hereby certified to be in full force and effect on the date hereof, do hereby nominate, constitute, and appoint **Gregory T. GORDON, Jeremy B. STANLEY, Patricia A. MOYE, Terri L. DODRILL, Syvannah L. PATTERSON, Bailey GORDON of Charleston, West Virginia,** its true and lawful agent and Attorney-in-Fact, to make, execute, seal and deliver, for, and on its behalf as surety, and as its act and deed: **any and all bonds and undertakings,** and the execution of such bonds or undertakings in pursuance of these presents, shall be as binding upon said Companies, as fully and amply, to all intents and purposes, as if they had been duly executed and acknowledged by the regularly elected officers of the ZURICH AMERICAN INSURANCE COMPANY at its office in New York, New York., the regularly elected officers of the COLONIAL AMERICAN CASUALTY AND SURETY COMPANY at its office in Owings Mills, Maryland., and the regularly elected officers of the FIDELITY AND DEPOSIT COMPANY OF MARYLAND at its office in Owings Mills, Maryland., in their own proper persons.

The said Vice President does hereby certify that the extract set forth on the reverse side hereof is a true copy of Article V, Section 8, of the By-Laws of said Companies, and is now in force.

IN WITNESS WHEREOF, the said Vice-President has hereunto subscribed his/her names and affixed the Corporate Seals of the said **ZURICH AMERICAN INSURANCE COMPANY, COLONIAL AMERICAN CASUALTY AND SURETY COMPANY, and FIDELITY AND DEPOSIT COMPANY OF MARYLAND**, this 26th day of August, A.D. 2026.

ATTEST:
ZURICH AMERICAN INSURANCE COMPANY
COLONIAL AMERICAN CASUALTY AND SURETY COMPANY
FIDELITY AND DEPOSIT COMPANY OF MARYLAND

By: Thomas O. McClellan
Vice President

By: Daniel Lutes
Secretary

State of Maryland
County of Baltimore

On this 26th day of August, A.D. 2026, before the subscriber, a Notary Public of the State of Maryland, duly commissioned and qualified, **Thomas O. McClellan, Vice President and Daniel Lutes, Secretary** of the Companies, to me personally known to be the individuals and officers described in and who executed the preceding instrument, and acknowledged the execution of same, and being by me duly sworn, deposeth and saith, that he/she is the said officer of the Company aforesaid, and that the seals affixed to the preceding instrument are the Corporate Seals of said Companies, and that the said Corporate Seals and the signature as such officer were duly affixed and subscribed to the said instrument by the authority and direction of the said Corporations.

IN TESTIMONY WHEREOF, I have hereunto set my hand and affixed my Official Seal the day and year first above written.

Genevieve M. Maison
Notary Public
My Commission Expire January 27, 2029

EXTRACT FROM BY-LAWS OF THE COMPANIES

Authenticity of this bond can be confirmed at bondvalidator.zurichna.com or 410-559-8790

"Article V, Section 8, Attorneys-in-Fact. The Chief Executive Officer, the President, or any Executive Vice President or Vice President may, by written instrument under the attested corporate seal, appoint attorneys-in-fact with authority to execute bonds, policies, recognizances, stipulations, undertakings, or other like instruments on behalf of the Company, and may authorize any officer or any such attorney-in-fact to affix the corporate seal thereto; and may with or without cause modify of revoke any such appointment or authority at any time."

CERTIFICATE

I, the undersigned, Vice President of the ZURICH AMERICAN INSURANCE COMPANY, the COLONIAL AMERICAN CASUALTY AND SURETY COMPANY, and the FIDELITY AND DEPOSIT COMPANY OF MARYLAND, do hereby certify that the foregoing Power of Attorney is still in full force and effect on the date of this certificate; and I do further certify that Article V, Section 8, of the By-Laws of the Companies is still in force.

This Power of Attorney and Certificate may be signed by facsimile under and by authority of the following resolution of the Board of Directors of the ZURICH AMERICAN INSURANCE COMPANY at a meeting duly called and held on the 15th day of December 1998.

RESOLVED: "That the signature of the President or a Vice President and the attesting signature of a Secretary or an Assistant Secretary and the Seal of the Company may be affixed by facsimile on any Power of Attorney...Any such Power or any certificate thereof bearing such facsimile signature and seal shall be valid and binding on the Company."

This Power of Attorney and Certificate may be signed by facsimile under and by authority of the following resolution of the Board of Directors of the COLONIAL AMERICAN CASUALTY AND SURETY COMPANY at a meeting duly called and held on the 5th day of May, 1994, and the following resolution of the Board of Directors of the FIDELITY AND DEPOSIT COMPANY OF MARYLAND at a meeting duly called and held on the 10th day of May, 1990.

RESOLVED: "That the facsimile or mechanically reproduced seal of the company and facsimile or mechanically reproduced signature of any Vice-President, Secretary, or Assistant Secretary of the Company, whether made heretofore or hereafter, wherever appearing upon a certified copy of any power of attorney issued by the Company, shall be valid and binding upon the Company with the same force and effect as though manually affixed.

IN TESTIMONY WHEREOF, I have hereunto subscribed my name and affixed the corporate seals of the said Companies, this 10th day of September, 2026.

Mary Jean Pethick
Vice President

TO REPORT A CLAIM WITH REGARD TO A SURETY BOND, PLEASE SUBMIT A COMPLETE DESCRIPTION OF THE CLAIM INCLUDING THE PRINCIPAL ON THE BOND, THE BOND NUMBER, AND YOUR CONTACT INFORMATION TO:

Zurich Surety Claims
1299 Zurich Way
Schaumburg, IL 60196-1056
reportsfclaims@zurichna.com
800-626-4577

Authenticity of this bond can be confirmed at bondvalidator.zurichna.com or 410-559-8790

WV-73
Approved / April 30, 2020

State of West Virginia
DRUG FREE WORKPLACE CONFORMANCE AFFIDAVIT
***West Virginia Code* §21-1D-5**

I, Bruce D. McClanahan, after being first duly sworn, depose and state as follows:

1. I am an employee of McClanahan Construction Company, LLC; and,
(Company Name)

2. I do hereby attest that McClanahan Construction Company, LLC
(Company Name)

maintains a written plan for a drug-free workplace policy and that such plan and policy are in compliance with ***West Virginia Code*** §21-1D.

The above statements are sworn to under the penalty of perjury.

Printed Name: Bruce D. McClanahan

Signature: Bruce D. McClanahan

Title: Managing Member

Company Name: McClanahan Construction Company, LLC

Date: September 10, 2026

STATE OF WEST VIRGINIA,

COUNTY OF Raleigh, TO-WIT:

Taken, subscribed and sworn to before me this 10th day of September, 2026.

By Commission expires May 15, 2028

(Seal)

Official Seal
Notary Public, State of West Virginia
Patricia A. Moye
150 Barnstaple Dr.
Daniels, WV 25832
My Commission Expires May 15, 2028

Patricia A. Moye
(Notary Public)

Rev. July 7, 2017

State of West Virginia

PURCHASING DIVISION

Construction Bid Submission Review Form

This list has been provided for informational purposes only and is not to be construed as a complete list of request for quotation or bidding requirements for any individual construction project. This list does not and cannot include every item, mistake or oversight that could cause a contractor's bid to be disqualified. Rather, this list is intended to draw attention to some of the most common problems that the Purchasing Division encounters in the bidding process for construction projects. All potential bidders must read the request for quotation, all additional documents, and all instructions relating thereto ("Bid Documents") in their entirety to identify the actual request for quotation and bidding requirements. Failure to read the Bid Documents in their entirety and comply with the stated requirements contained therein may result in bid disqualification.

Errors That Shall Be Reason for Immediate Bid Disqualification

1. Failure to attend a mandatory pre-bid meeting
2. Failure to sign the bid
3. Failure to supply a valid bid bond or other surety approved by the state of West Virginia
4. Failure to meet any mandatory requirement of the solicitation
5. Failure to acknowledge receipt of Addenda (only if stipulated as mandatory)
6. Failure to submit bid prior to the bid opening date and time
7. Federal debarment
8. State of West Virginia debarment or suspension

Errors that May Be Reason for Bid Disqualification Before Contract Award

1. Debt to the state or political subdivision (must be cured prior to award)
2. Workers' Compensation or Unemployment Compensation delinquency (must be cured prior to award)
3. Not registered as a vendor with the state of West Virginia (must be cured prior to award)
4. Failure to obtain required bonds and/or insurance
5. Failure to provide the sub-contractor listing within one business day of bid opening or one business day of the request to do so by the Purchasing Division.
6. Failure to supply West Virginia contractor's license number with bid or within one day of Purchasing Division request to do so.
7. Failure to supply a signed drug-free workplace affidavit with bid or within one day of Purchasing Division request to do so.
8. Failure to use the provided solicitation form (only if stipulated as mandatory).
9. Failure to complete the Disclosure of Interested Parties to Contracts form (if contract has an actual or estimated value of $1 million or more; does not apply to publicly traded companies listed on national or internal stock exchange)

Department of Administration Purchasing Division 2019 Washington Street East Post Office Box 50130 Charleston, WV 25305-0130	**State of West Virginia** **Centralized Request for Quote** **Construction**

Proc Folder: 2046656			**Reason for Modification:**
Doc Description: Williamstown Drainage Repairs (Construction)			Addendum No.1
Proc Type: Central Purchase Order			
Date Issued	**Solicitation Closes**	**Solicitation No**	**Version**
2026-08-26	2026-09-10 13:30	CRFQ 0603 ADJ2700000020	2

BID RECEIVING LOCATION

BID CLERK
DEPARTMENT OF ADMINISTRATION
PURCHASING DIVISION
2019 WASHINGTON ST E
CHARLESTON WV 25305
US

VENDOR

Vendor Customer Code: 000000206945

Vendor Name : McClanahan Construction Company, LLC

Address : 744 Poca River Rd, Poca, WV 25159

Street : 744 Poca River Rd

City : Poca

State : WV **Country :** United States **Zip :** 25159

Principal Contact : Bruce D. McClanahan

Vendor Contact Phone: 304-776-3355 **Extension:**

FOR INFORMATION CONTACT THE BUYER
David H Pauline
304-558-0067
david.h.pauline@wv.gov

Vendor Signature X Bruce D. McClanahan **FEIN#** 55-0698258 **DATE** September 10, 2026

All offers subject to all terms and conditions contained in this solicitation

ADDITIONAL INFORMATION

Addendum No. 1

To add the Specifications pages there were inadvertently omitted from the original solicitation documents, see attached.

The bid opening date & time remains September 10, 2026, at 1:30 pm EST.

No other changes.

XXXXXXXXXXXXXXXXXXXXXXXXXXXXXXXXXXXXXXXXXXXXXXXXXXXX

Mandatory Pre-bid Meeting
Williamstown AASF#1 (Army Aviation Support Facility)
387 Aviation Drive
Williamstown, WV 26187
August 27, 2026, at 10:00 am EST

See General Construction Specifications for additional information
regarding site visits.

XXXXXXXXXXXXXXXXXXXXXXXXXXXXXXXXXXXXXXXXXXXXXXXXXXXX

INVOICE TO		SHIP TO	
ADJUTANT GENERALS OFFICE		ARMY AVIATION SUPPORT FACILITY 1	
1707 COONSKIN DR		387 AVIATION DR	
CHARLESTON	WV	WILLIAMSTOWN	WV
US		US	

Line	Comm Ln Desc	Qty	Unit Issue	Unit Price	Total Price
1	Williamstown Drainage Repairs (Construction)	1	Base Bid	$375,351.00	$375,351.00

Comm Code	Manufacturer	Specification	Model #
72141205			

Extended Description:

Provide and furnish all labor, materials, tools, expendable equipment and all services to complete Williamstown Drainage Repairs, near Williamstown WV per the attached specifications and documentation.

SCHEDULE OF EVENTS

Line	Event	Event Date
1	Mandatory Pre-bid Meeting At 10:00 am EST.	2026-08-27
2	Vendor Technical Questions Due By 11:00 am EST.	2026-09-03

SOLICITATION NUMBER: CRFQ ADJ2700000020
Addendum Number: 1

The purpose of this addendum is to modify the solicitation identified as ("ADJ2700000020") to reflect the change(s) identified and described below.

Applicable Addendum Category:

☐ Modify bid opening date and time.

☐ Modify specifications of product or service being sought.

☒ Attachment of vendor questions and responses.

☐ Attachment of pre-bid sign-in sheet.

☒ Correction of error.

☒ Other.

Description of Modification to Solicitation:

1. To provide the Specifications pages that were inadvertently omitted from the original solicitation documents, see attached
2. The bid opening date and time remains September 10, 2026, at 1:30 pm EST.

No other changes.

Additional Documentation: Documentation related to this Addendum (if any) has been included herewith as Attachment A and is specifically incorporated herein by reference.

Terms and Conditions:

1. All provisions of the Solicitation and other addenda not modified herein shall remain in full force and effect.

2. Vendor should acknowledge receipt of all addenda issued for this Solicitation by completing an Addendum Acknowledgment, a copy of which is included herewith. Failure to acknowledge addenda may result in bid disqualification. The addendum acknowledgement should be submitted with the bid to expedite document processing.

GENERAL CONSTRUCTION SPECIFICATIONS

1. **PURPOSE AND SCOPE:** The West Virginia Purchasing Division is soliciting bids on behalf of the West Virginia Adjutant General's Office, to establish a contract for Drainage Repairs at the Williamstown AASF#1 (Army Aviation Support Facility) in Williamstown, WV. The Thrasher Group, Inc. is serving as the Engineer on this project.

   The award, execution and completion of this project is contingent upon receipt of funding; therefore, vendors are requested to honor the pricing submitted on their bids for 60 days from the date bids are opened on this project.

   Please follow the guidelines below regarding the meeting.

   - Site visits will take place the day of the Pre-Bid meeting in small groups as directed by the Agency Project Manager, vendors should plan on the possibility of being onsite for several hours, depending on the number of contractors who attend.
   - The site visit is NOT an opportunity to ask or submit technical questions about the project. No verbal representations provided at a site visit are binding in any manner. Interested bidders should submit all technical questions per the instructions in the CRFQ.

2. **DEFINITIONS:** The terms listed below shall have the meanings assigned to them below. Additional definitions can be found in section 2 of the General Terms and Conditions and in the Specification's Manual as defined below.

   2.1 "Construction Services" means drainage repairs at the Williamstown AASF#1 (Army Aviation Support Facility) in Williamstown, WV, as more fully described in these specifications and the Specifications/Project Manual.

   2.2 "Pricing Page" means the pages contained in wvOASIS, attached hereto, or included in the Specifications/Project Manual upon which Vendor should list its proposed price for the Construction Services.

   2.3 "Solicitation" means the official notice of an opportunity to supply the State with Construction Services that is published by the Purchasing Division.

   2.4 "Specifications/Project Manual" means the American Institute of Architect forms, specifications, plans, drawings, and related documents developed by the architect, engineer, or Agency that provide detailed instructions on how the Construction Services are to be performed along with any American Institute of Architects documents ("AIA documents") attached thereto.

3. **ORDER OF PRECEDENCE:** This General Construction Specifications document will have priority over, and supersede, anything contained in the Specifications/Project Manual.

4. **QUALIFICATIONS:** Vendor, or Vendor's staff if requirements are inherently limited to individuals rather than corporate entities, shall have the following minimum qualifications:

   4.1. Experience: Vendor, or Vendor's supervisory staff assigned to this project, must have successfully completed at least 5 (five) projects that involved work similar to that described in the Specifications/Project Manual. Compliance with this experience requirement will be determined prior to contract award by the State through references provided by the Vendor upon request, through knowledge or documentation of the Vendor's past projects, through confirmation of experience requirements from the architect assisting the State in this project, or some other method that the State determines to be acceptable. Vendor must provide any documentation requested by the State to assist in confirmation of compliance with this provision. References, documentation, or other information to confirm compliance with this experience requirement may be requested after bid opening and prior to contract award.

5. **CONTRACT AWARD:** The Contract is intended to provide Agency with a purchase price for the Construction Services. The Contract will be awarded to the lowest qualified responsible bidder meeting the required specifications. If the Pricing Pages contain alternates/add-ons, the Contract will be awarded based on the grand total of the base bid and any alternates/add-ons selected.

6. **SELECTION OF ALTERNATES:** Pursuant to W. Va. Code § 5-22-1(f), any solicitation of bids shall include no more than five alternates. Alternates, if accepted, shall be accepted in the order in which they are listed on the bid form. Any unaccepted alternate contained within a bid shall expire 90 days after the date of the opening of bids for review. Determination of the lowest qualified responsible bidder shall be based on the sum of the base bid and any alternates accepted. Alternate selection will be identified in the Purchase Order. **This project contains No (0) alternates.**

7. **PROGRESS PAYMENTS:** The Vendor will be paid in the form of periodic progress payments for work completed. Payment requests along with documentation supporting the request will be submitted to and reviewed by the Architect. If approved, the Architect will communicate approval to the Owner and Owner will process payment. The Owner reserves the right to withhold liquidated damages from progress payments. Progress payments will be made no more than monthly.

Approval and payment of progress payments will be based on Contractor's submission of a payment allocation schedule which allocates the entire contract sum to payment milestones. Architect and Owner will review the payment allocation and may mandate changes that they believe are necessary.

8. **RETAINAGE:** Agency is entitled to withhold **10%** from each progress payment made as retainage. Agency will partially release retainage upon certification of substantial completion by the Architect in accordance with this Contract but will continue to retain amounts sufficient to cover activities needed to reach final completion.

9. **PERFORMANCE:** Vendor shall perform the Construction Services in accordance with this document and the Specifications/Project Manual.

10. **SUBSTANTIAL AND FINAL COMPLETION:** Vendor shall achieve substantial completion by a date to be determined based on the notice to proceed and final completion by a date to be determined based on the notice to proceed. Failure to meet the deadlines established herein, unless extended by change order authorizing additional time free of liquidated damages, will result in liquidated damages being applied.

11. **LIQUIDATED DAMAGES:** Contractor shall pay liquidated damages in the amount of $1,500.00 per day of delay, plus a one-time fixed cost of $1,250.00 for Staff Judge Advocate review for work not completed after contract completion date. This clause shall in no way be considered exclusive and shall not limit the State or Agency's right to pursue any other available remedy.

12. **PROJECT PLANS:** Copies of the project plans can be obtained by contacting the entity identified below.

    The Thrasher Group, Inc.
    600 White Oaks Blvd
    Bridgeport, WV 26330

    Copies of project plans can be examined at the following locations

    Kanawha Valley Builder's Association
    1627 Bigley Avenue
    Charleston, WV 25302
    (304) 342-7141 FAX: (304) 343-8014

    Contractor's Association of West Virginia
    2114 Kanawha Boulevard East
    Charleston, WV 25311
    (304) 342-1166 FAX: (304) 342-1074

Pennsylvania Builder's Exchange
1813 North Franklin Street
Pittsburgh, PA 15233
(412) 922-4200 FAX: (412) 928-9406

Construction Employer's Association of North Central West Virginia
2794 White Hall Boulevard
White Hall, WV 26554
(304) 367-1290 FAX: (304) 367-0126

McGraw-Hill Dodge Reports
Attn: Scan Department
3315 Central Avenue
Hot Springs, AR 71913-6138
(781) 430-2004

Reed Construction Data
30 Technology Parkway South, Suite 100
Norcross, GA 30092
(770) 417-4000 FAX: (800) 317-0870

13. SUBSTITUTIONS: Any substitution requests must be submitted in accordance with the official question and answer period described in the INSTRUCTIONS TO VENDORS SUBMITTING BIDS, Paragraph 4. Vendor Question Deadline.

14. FACILITIES ACCESS: Performance of Contract Services may require access cards and/or keys to gain entrance to Agency's facilities. In the event that access cards and/or keys are required:

14.1. Vendor must identify principal service personnel which will be issued access cards and/or keys to perform service.

14.2. Vendor will be responsible for controlling cards and keys and will pay replacement fee, if the cards or keys become lost or stolen.

14.3. Vendor shall notify Agency immediately of any lost, stolen, or missing card or key.

14.4. Anyone performing under this Contract will be subject to Agency's security protocol and procedures.

14.5. Vendor shall inform all staff of Agency's security protocol and procedures.

15. MISCELLANEOUS:

15.1. Contract Manager: During its performance of this Contract, Vendor must designate and maintain a primary contract manager responsible for overseeing Vendor's responsibilities under this Contract. The Contract manager must be available during normal business hours to address any customer service or other issues related to this Contract. Vendor should list its Contract manager and his or her contact information below.

Contract Manager: Bruce D. McClanahan

Telephone Number: 304-776-3355

Fax Number: N/A

Email Address: bruce@mcclanahanconstruction.com

15.2. Owner's Representative: Owner's representative for notice purposes is

Name: Jim Skaggs

Telephone Number: 304-719-8745

Fax Number: N/A

Email Address: robert.a.skaggs14.nfg@army.mil

16. Initial Decision Maker: The Thrasher Group, Inc., the Architect, shall serve as the Initial Decision Maker in matters relating to this contract.

Department of Administration Purchasing Division 2019 Washington Street East Post Office Box 50130 Charleston, WV 25305-0130	**State of West Virginia** **Centralized Request for Quote** **Construction**

Proc Folder: 2046656			**Reason for Modification:**
Doc Description: Williamstown Drainage Repairs (Construction)			Addendum No. 2
Proc Type: Central Purchase Order			
Date Issued	**Solicitation Closes**	**Solicitation No**	**Version**
2026-09-04	2026-09-10 13:30	CRFQ 0603 ADJ2700000020	3

BID RECEIVING LOCATION

BID CLERK
DEPARTMENT OF ADMINISTRATION
PURCHASING DIVISION
2019 WASHINGTON ST E
CHARLESTON WV 25305
US

VENDOR

Vendor Customer Code: 000000206945

Vendor Name : McClanahan Construction Company, LLC

Address : 744 Poca River Rd, Poca, WV 25159

Street : 744 Poca River Rd

City : Poca

State : WV **Country :** United States **Zip :** 25159

Principal Contact : Bruce D. McClanahan

Vendor Contact Phone: 304-776-3355 **Extension:**

FOR INFORMATION CONTACT THE BUYER
David H Pauline
304-558-0067
david.h.pauline@wv.gov

Vendor Signature X Bruce D. McClanahan **FEIN#** 55-0698258 **DATE** September 10, 2026

All offers subject to all terms and conditions contained in this solicitation

ADDITIONAL INFORMATION

Addendum No. 2

To provide responses to the vendor technical questions, see attached.

To provide map/drawing, see attached

The bid opening date & time remains September 10, 2026, at 1:30 pm EST.

No other changes.

INVOICE TO		SHIP TO	
ADJUTANT GENERALS OFFICE		ARMY AVIATION SUPPORT FACILITY 1	
1707 COONSKIN DR		387 AVIATION DR	
CHARLESTON	WV	WILLIAMSTOWN	WV
US		US	

Line	Comm Ln Desc	Qty	Unit Issue	Unit Price	Total Price
1	Williamstown Drainage Repairs (Construction)	1	Base Bid	$375,351.00	$375,351.00

Comm Code	Manufacturer	Specification	Model #
72141205			

Extended Description:

Provide and furnish all labor, materials, tools, expendable equipment and all services to complete Williamstown Drainage Repairs, near Williamstown WV per the attached specifications and documentation.

SCHEDULE OF EVENTS

Line	Event	Event Date
1	Mandatory Pre-bid Meeting At 10:00 am EST.	2026-08-27
2	Vendor Technical Questions Due By 11:00 am EST.	2026-09-03

SOLICITATION NUMBER: CRFQ ADJ2700000020
Addendum Number: 2

The purpose of this addendum is to modify the solicitation identified as ("ADJ2700000020") to reflect the change(s) identified and described below.

Applicable Addendum Category:

☐ Modify bid opening date and time.

☐ Modify specifications of product or service being sought.

☒ Attachment of vendor questions and responses.

☐ Attachment of pre-bid sign-in sheet.

☐ Correction of error.

☒ Other.

Description of Modification to Solicitation:

1. To provide responses to the vendor technical questions see attached.
2. To provide map/drawing, see attached.
3. The bid opening date and time remains September 10, 2026, at 1:30 pm EST.

No other changes.

Additional Documentation: Documentation related to this Addendum (if any) has been included herewith as Attachment A and is specifically incorporated herein by reference.

Terms and Conditions:

1. All provisions of the Solicitation and other addenda not modified herein shall remain in full force and effect.

2. Vendor should acknowledge receipt of all addenda issued for this Solicitation by completing an Addendum Acknowledgment, a copy of which is included herewith. Failure to acknowledge addenda may result in bid disqualification. The addendum acknowledgement should be submitted with the bid to expedite document processing.

1. Question: Will the Equipment & Trucks working around the Apron of the Heliport be required to have FAA Flags, FAA Strobes and a FAA Radio?

   Response: No.

2. Question: Item #2 Unclassified Borrow 400-CY. Is there anywhere on the property this material can be obtained? OR will it need to be Hauled in from an outside Location?

   Response: The unclassified borrow should be priced as obtaining material from an offsite location and hauling it to the project site.

3. Question: Can the excess dirt generated from the Pipe Trench be used for the Fill Required?

   Response: Yes as long as the material excavated meets the specified material requirements for placement of fill per WVDOH technical specs.

4. Question: Will the contractor be given a space to unload Pipe and Inlets? If so where?

   Response: Yes, an area will be provided to the Contractor to unload and store materials onsite. This location will be finalized between the Owner/Contractor once award has been made.

5. Question: Is the 273 lf of ditch line removed to be replaced with a concrete channel with water stop per drawing c2.03 ? & per concrete gutter detail on drawing c3.02? Or is it grouted rip rap per pre bid & grouted rip rap ditch detail on drawing c3.02?
   Response: The 273 LF of ditch line to be removed should be replaced with a grouted riprap channel that has a water stop installed at the upstream end to prevent water from flowing underneath the grouted channel.

6. Question: Is concrete gutter detail relevant on this project?
   Response: No, the concrete gutter detail can be disregarded and is not used as part of this project.

7. Question: Is pipe outlet protection detail relevant since using wing walls?
   Response: We are requesting that on the outlet end of the wingwall that a riprap apron is installed to armer the ditchline of water leaving the site.

8. Question: Inlet #3-3 & 3-4 look like need revised.
   Response: A revised C2.03 has been provided with updated invert elevations.

9. Question: Who is responsible for watering seeded areas?
   Response: Contractor.

10. Question: Plan Sheet C2.03 there are two notes about a Concrete Channel with Water Stop. On the Detail Sheet there is a Detail for Concrete Gutter and a Grouted RipRap Channel. Bid Item #13 is for Grouted RipRap Channel 275-LF. I dont see a Bid Item for a Concrete Gutter.
    Response: Please see the response to question 5.

11. Question: Could you define Where the Concrete Gutter Starts & Stops as well as the Grouted RipRap Ditch.
    Response: There is no concrete gutter on the project, see response to question 5. The grouted riprap ditch starts at the existing inlet and continue to within 15 feet of DI3-4.

12. Question: On Sheet C2.03, calls for a concrete ditch assuming Detail on Sheet C3.02 Concrete Gutter is what this is. There is no pay item listed for this work. Please clarify if this is actually Pay Item No. 13 – Grouted Rip-Rap Channel? Also, if there is no Concrete Gutter, does the Detail for the Cut-off Wall apply to this project?

    Response: Please see response to Question 5.

13. Question: Can a quantity for Silt Fence be provided so all bidders are bidding the same?
    Response: The contractor is responsible for installation and removal of e&s controls to protect sediment laden water from leaving the site. This may consist of silt fence, silt sock, inlet protection, etc. This cost should be made incidental to the linear foot price of each applicable size storm pipe. Contractor to assume silt fence or equal bmp control to run the length of each storm pipe installation.

14. Question: Is Bid Item No. 14 work shown on Sheet C2.03 near DI 3-4?
    Response: Yes that is correct. All the other vegetative channels are constructed overtop of new storm pipe and the cost of that work is incidental to the storm pipe. However the ditch that drains into DI 3-4 and then leads into the grouted riprap channel is the vegetative channel.

15. Question: Please clarify what is meant for Bid Items No. 10 and 11 concerning the Outlet Protection. Details on Sheet C3.02 appear to be for Culvert Discharge Areas, not Wingwalls.

    Response: Please see response to Question 7.

16. Question: If we need to remove fencing to complete the scope of the project how will this be paid?

    Response: Where existing fencing must be temporarily removed to complete adjacent work including but not limited to wingwall, storm pipe/drainage structure, or grading operations, the removal of fence fabric, shall be considered incidental to the corresponding item(s) of work and included in the unit bid for that work.

    Where fencing will be impacted because of a grade change with the proposed construction the fence should be removed and at the revised grade and shall be incidental to the associated grading/structure item(s).

    No separate payment will be made for fence removal, temporary fencing, reinstallation, or replacement.

THRASHER
THE THRASHER GROUP INC.
600 WHITE OAKS BLVD,
P.O. BOX 940
BRIDGEPORT, WV 26330

P (304) 624-4108
F (304) 624-7831

www.thethrashergroup.com

THE INFORMATION CONTAINED HEREIN IS THE SOLE PROPERTY OF THE THRASHER GROUP, INC. REPRODUCTION OF THESE DOCUMENTS IN WHOLE, OR IN PART FOR ANY REASON WITHOUT PRIOR WRITTEN PERMISSION IS STRICTLY PROHIBITED.

COPYRIGHT © 2026
THE THRASHER GROUP, INC.

NO.	BY	DATE	DESCRIPTION
1	NMP	9/4/2026	REVISED INLET INVERTS – ADDENDUM #1

WILLIAMSTOWN - WVANG DRAINAGE REPAIRS
WEST VIRIGNIA ARMY NATIONAL GUARD
WOOD COUNTY, WEST VIRIGNIA

DRAWN: DATE:
CHECKED: DATE:
APPROVED: DATE:

PROJECT No.
T80-11652

SITE PLAN

SHEET No.
C2.03

CAD FILE: R:\080\T80-11652.00 – WVANG – Williamstown Drainage Repairs\Drawing\T80-11652.00 Site Plan.dwg
PLOT DATE/TIME: 9/4/2026 11:38 AM
LAYOUT: Site Plan (4)
USER: nicole price

Department of Administration Purchasing Division 2019 Washington Street East Post Office Box 50130 Charleston, WV 25305-0130	**State of West Virginia** **Centralized Request for Quote** **Construction**

Proc Folder: 2046656			**Reason for Modification:**
Doc Description: Williamstown Drainage Repairs (Construction)			Addendum No. 3
Proc Type: Central Purchase Order			
Date Issued	**Solicitation Closes**	**Solicitation No**	**Version**
2026-09-04	2026-09-10 13:30	CRFQ 0603 ADJ2700000020	4

BID RECEIVING LOCATION

BID CLERK
DEPARTMENT OF ADMINISTRATION
PURCHASING DIVISION
2019 WASHINGTON ST E
CHARLESTON WV 25305
US

VENDOR

Vendor Customer Code: 000000206945

Vendor Name : McClanahan Construction Company, LLC

Address : 744 Poca River Rd, Poca, WV 25159

Street : 744 Poca River Rd

City : Poca

State : WV **Country :** United States **Zip :** 25159

Principal Contact : Bruce D. McClanahan

Vendor Contact Phone: 304-776-3355 **Extension:**

FOR INFORMATION CONTACT THE BUYER
David H Pauline
304-558-0067
david.h.pauline@wv.gov

Vendor Signature X Bruce D. McClanahan **FEIN#** 55-0698258 **DATE** September 10, 2026

All offers subject to all terms and conditions contained in this solicitation

ADDITIONAL INFORMATION

Addendum No. 3

To provide prebid sign-in sheets, see attached.

The bid opening date & time remains September 10, 2026, at 1:30 pm EST.

No other changes.

INVOICE TO		SHIP TO	
ADJUTANT GENERALS OFFICE		ARMY AVIATION SUPPORT FACILITY 1	
1707 COONSKIN DR		387 AVIATION DR	
CHARLESTON	WV	WILLIAMSTOWN	WV
US		US	

Line	Comm Ln Desc	Qty	Unit Issue	Unit Price	Total Price
1	Williamstown Drainage Repairs (Construction)	1	Base Bid	$375,351.00	$375,351.00

Comm Code	Manufacturer	Specification	Model #
72141205			

Extended Description:

Provide and furnish all labor, materials, tools, expendable equipment and all services to complete Williamstown Drainage Repairs, near Williamstown WV per the attached specifications and documentation.

SCHEDULE OF EVENTS

Line	Event	Event Date
1	Mandatory Pre-bid Meeting At 10:00 am EST.	2026-08-27
2	Vendor Technical Questions Due By 11:00 am EST.	2026-09-03

SOLICITATION NUMBER: CRFQ ADJ2700000020
Addendum Number: 3

The purpose of this addendum is to modify the solicitation identified as ("ADJ2700000020") to reflect the change(s) identified and described below.

Applicable Addendum Category:

☐ Modify bid opening date and time.

☐ Modify specifications of product or service being sought.

☐ Attachment of vendor questions and responses.

☒ Attachment of pre-bid sign-in sheet.

☐ Correction of error.

☐ Other.

Description of Modification to Solicitation:

1. To provide the prebid meeting sign-in sheets, see attached.
2. The bid opening date and time remains September 10, 2026, at 1:30 pm EST.

No other changes.

Additional Documentation: Documentation related to this Addendum (if any) has been included herewith as Attachment A and is specifically incorporated herein by reference.

Terms and Conditions:

1. All provisions of the Solicitation and other addenda not modified herein shall remain in full force and effect.

2. Vendor should acknowledge receipt of all addenda issued for this Solicitation by completing an Addendum Acknowledgment, a copy of which is included herewith. Failure to acknowledge addenda may result in bid disqualification. The addendum acknowledgement should be submitted with the bid to expedite document processing.

WEST VIRGINIA
PURCHASING DIVISION

Pre-Bid Sign-In Sheet (WV-32)

Solicitation No.: CRFQ-ADJ2700000020

Date of Pre-Bid Meeting: 8/27/26

Location of Pre-Bid Meeting: AASF#1-Williamstown, WV

☑ Mandatory ☐ Not Mandatory

PLEASE NOTE:

- Vendors must sign in on this sheet to verify attendance at the pre-bid conference meeting.
- Failure to legibly sign in may be grounds for declaring a vendor ineligible to bid.
- For further verification, please provide a business card, if possible.

One Vendor Per Representative: No one individual is permitted to represent more than one vendor at the pre-bid conference. Any individual that does attempt to represent two or more vendors will be required to select one vendor to which the individual's attendance will be attributed. The vendors not selected will be deemed to have not attended the pre-bid meeting unless another individual attended on their behalf.

Firm Representative:	Representative Name (Printed)	Firm Address:	Telephone:	Email Address:
Gonday Enterprises	Isaac Lilly	711 Ruffner Ave Charleston WV 25301	304-621-5375	ikelilly024@gmail
WQX	Chad Smith	1081 Kanawha State Forest Drive Charleston, WV 25314	304 531 0595	chad.smith@wqxusa.com
AASF#1	Gary Cooper	387 Aviation drive Williamstown W.V.	304580-8726	gary.l.cooper10.nf@army.mil
Benchmark Const. Co. Inc.	Eddie Layne	P.O. Box 1018 Hurricane, WV 25526	304-881-2686	e.layne@bmcwv.com
JC Bosley Const. Inc	Mark Husk	1 Bosley Ave Parkersburg WV	304-422 0025	markh@jcbci.com
Lakecrest Construction	Matt Perkins	37 Mystery Ln Fairmont WV 26554	304-657-0141	mperkins@lakecrest.llc
WV Military Authority	Dean Wingerd	1707 Coonskin Drive Charleston, WV 25311	304 561-6629	

WEST VIRGINIA
PURCHASING DIVISION

Pre-Bid Sign-In Sheet (WV-32)

Solicitation No.: CRFQ-ADJ2700000020

Date of Pre-Bid Meeting: 8/27/26

Location of Pre-Bid Meeting: AASF#1-Williamstown, WV

☑ Mandatory ☐ Not Mandatory

PLEASE NOTE:

- Vendors must sign in on this sheet to verify attendance at the pre-bid conference meeting.
- Failure to legibly sign in may be grounds for declaring a vendor ineligible to bid.
- For further verification, please provide a business card, if possible.

One Vendor Per Representative: No one individual is permitted to represent more than one vendor at the pre-bid conference. Any individual that does attempt to represent two or more vendors will be required to select one vendor to which the individual's attendance will be attributed. The vendors not selected will be deemed to have not attended the pre-bid meeting unless another individual attended on their behalf.

Firm Representative:	Representative Name (Printed)	Firm Address:	Telephone:	Email Address:
McClanahan Construction	Robert Rose	744 Poca River Rd Poca WV 25159	304 776-3385	bruce@mcclanahanconstruction.com
J.F. Allen Company	Tanner Belt	2133 Old Weston Rd Buckhannon WV 26201	304-918-7882	TBELT@JFALLENCO.com
A Thrasher	Nicole Price	600 White Oaks Blvd Bridgeport, WV 26330	304-423-5991	nprice@thrashergroup.com
KELLY PAVING	SCOTT HAMM	P.O. Box 366 Williamstown WV	304-424-7353	S.HAMM@ShellyANDSANDS.com

WV000108

Eddie Layne
304-881-2686
E.Layne@bmcwv.com

Benchmark Construction Co. Inc. – *Since 1981*

Mailing Address: PO Box 1018 • Hurricane, WV 25526

J. C. BOSLEY CONSTRUCTION, INC.

Mark A. Husk
Project Coordinator

1 Bosley Ave.
Parkersburg, WV 26101
E-Mail: markh@jcbci.com

24 Hour Service: (304) 422-0025
Fax: (304) 422-0414
Mobile: (304) 483-3647

Chad E. Smith
Vice President

(304) 531-0595 Cell
(304) 744-9431 Office
chad.smith@wqxusa.com

1081 Kanawha State Forest Drive
Charleston, WV 25314
www.wqxusa.com

WQX

ADDENDUM ACKNOWLEDGEMENT FORM
SOLICITATION NO.: CRFQ ADJ2700000020

Instructions: Please acknowledge receipt of all addenda issued with this solicitation by completing this addendum acknowledgment form. Check the box next to each addendum received and sign below. Failure to acknowledge addenda may result in bid disqualification.

Acknowledgment: I hereby acknowledge receipt of the following addenda and have made the necessary revisions to my proposal, plans and/or specification, etc.

Addendum Numbers Received:
(Check the box next to each addendum received)

☒	Addendum No. 1	☐	Addendum No. 6
☒	Addendum No. 2	☐	Addendum No. 7
☒	Addendum No. 3	☐	Addendum No. 8
☐	Addendum No. 4	☐	Addendum No. 9
☐	Addendum No. 5	☐	Addendum No. 10

I understand that failure to confirm the receipt of addenda may be cause for rejection of this bid. I further understand that that any verbal representation made or assumed to be made during any oral discussion held between Vendor's representatives and any state personnel is not binding. Only the information issued in writing and added to the specifications by an official addendum is binding.

McClanahan Construction Company, LLC
Company

Bruce D. McClanahan
Authorized Signature

September 10, 2026
Date

NOTE: This addendum acknowledgement should be submitted with the bid to expedite document processing.

CONTRACTOR LICENSE

AUTHORIZED BY THE

West Virginia Contractor Licensing Board

NUMBER: **WV004165**

CLASSIFICATION:

GENERAL BUILDING
RESIDENTIAL
SPECIALTY

MCCLANAHAN CONSTRUCTION COMPANY LLC
744 POCA RIVER ROAD N
POCA, WV 25159-9042

DATE ISSUED	EXPIRATION DATE
SEPTEMBER 11, 2025	**SEPTEMBER 11, 2026**

Bruce D. McClanahan

Authorized Signature

Chair, West Virginia Contractor Licensing Board

WEST VIRGINIA CONTRACTOR LICENSING BOARD

A copy of this license must be readily available for inspection by the Board on every job site where contracting work is being performed. This license number must appear in all advertisements, on all bid submissions, and on all fully executed and binding contracts. This license is non-transferable. This license is being issued under the provisions of West Virginia Code, Chapter 30, Article 42.

CONTRACTOR LICENSE

AUTHORIZED BY THE

West Virginia Contractor Licensing Board

NUMBER: **WV004165**

CLASSIFICATION:

GENERAL BUILDING
RESIDENTIAL
SPECIALTY

DUPLICATE

MCCLANAHAN CONSTRUCTION COMPANY LLC
744 POCA RIVER ROAD NORTH
POCA, WV 25159-9042

DATE ISSUED	EXPIRATION DATE
SEPTEMBER 11, 2026	**SEPTEMBER 11, 2027**

Authorized Signature

Chair, West Virginia Contractor Licensing Board

WEST VIRGINIA CONTRACTOR LICENSING BOARD

A copy of this license must be readily available for inspection by the Board on every job site where contracting work is being performed. This license number must appear in all advertisements, on all bid submissions, and on all fully executed and binding contracts. This license is non-transferable. This license is being issued under the provisions of West Virginia Code, Chapter 30, Article 42.