West Virginia
Purchasing Division
2019 Washington Street, East
Charleston, WV 25305
Telephone: 304-558-2306
General Fax: 304-558-6026
Bid Fax: 304-558-3970

The following documentation is an electronically-submitted vendor response to an advertised solicitation from the *West Virginia Purchasing Bulletin* within the Vendor Self-Service portal at ***wvOASIS.gov***. As part of the State of West Virginia's procurement process, and to maintain the transparency of the bid-opening process, this documentation submitted online is publicly posted by the West Virginia Purchasing Division at ***WVPurchasing.gov*** with any other vendor responses to this solicitation submitted to the Purchasing Division in hard copy format.

Solicitation Response(SR) Dept: 0603 ID: ESR08202600000001161 Ver.: 1 Function: New Phase: Final

Modified by batch , 08/20/2026

Header 5

List View

General Information | Contact | Default Values | Discount | Document Information | Clarification Request

Procurement Folder: 2026954

Procurement Type: Central Purchase Order

Vendor ID: 000000206945

Legal Name: MCCLANAHAN CONSTRUCTION CO LLC

Alias/DBA:

Total Bid: $3,366,020.00

Response Date: 08/20/2026

Response Time: 9:41

Responded By User ID: mcclanahancc

First Name: Bruce

Last Name: McClanahan

Email: bruce@mcclanahanconstru

Phone: 304-776-3355

SO Doc Code: CRFQ

SO Dept: 0603

SO Doc ID: ADJ2700000007

Published Date: 8/17/26

Close Date: 8/20/26

Close Time: 13:30

Status: Closed

Solicitation Description: Wheeling AASF#2 Taxiway Repairs (Construction)

Total of Header Attachments: 5

Total of All Attachments: 5

Department of Administration **Purchasing Division** **2019 Washington Street East** **Post Office Box 50130** **Charleston, WV 25305-0130**	**State of West Virginia** **Solicitation Response**

Proc Folder:	2026954
Solicitation Description:	Wheeling AASF#2 Taxiway Repairs (Construction)
Proc Type:	Central Purchase Order

Solicitation Closes	Solicitation Response	Version
2026-08-20 13:30	SR 0603 ESR08202600000001161	1

VENDOR

000000206945
MCCLANAHAN CONSTRUCTION CO LLC

Solicitation Number: CRFQ 0603 ADJ2700000007

Total Bid: 3366020 **Response Date:** 2026-08-20 **Response Time:** 09:41:27

Comments:

FOR INFORMATION CONTACT THE BUYER
David H Pauline
304-558-0067
david.h.pauline@wv.gov

Vendor
Signature X **FEIN#** **DATE**

All offers subject to all terms and conditions contained in this solicitation

Line	Comm Ln Desc	Qty	Unit Issue	Unit Price	Ln Total Or Contract Amount
1	Wheeling AASF#2 Taxiway Repairs (Construction) BASE BID				2090000.00

Comm Code	Manufacturer	Specification	Model #
72000000			

Commodity Line Comments:

Extended Description:

BASE BID-Provide labor, materials tools, supplies and equipment to provide taxiway repairs per the attached plans and specifications

Line	Comm Ln Desc	Qty	Unit Issue	Unit Price	Ln Total Or Contract Amount
2	ALTERNATE No.1- Full Slab Replacement in Area #1				639710.00

Comm Code	Manufacturer	Specification	Model #
72000000			

Commodity Line Comments:

Extended Description:

ALTERNATE No. 1-Provide labor, materials tools, supplies and equipment to provide full slab replacement taxiway repairs in Area #1 per the attached plans and specifications.

Line	Comm Ln Desc	Qty	Unit Issue	Unit Price	Ln Total Or Contract Amount
3	ALTERNATE No.2- Full Slab Replacement in Area #2				636310.00

Comm Code	Manufacturer	Specification	Model #
72000000			

Commodity Line Comments:

Extended Description:

ALTERNATE No. 2-Provide labor, materials tools, supplies and equipment to provide full slab replacement taxiway repairs in Area #2 per the attached plans and specifications.

Department of Administration
Purchasing Division
2019 Washington Street East
Post Office Box 50130
Charleston, WV 25305-0130

State of West Virginia
Centralized Request for Quote
Construction

Proc Folder: 2026954			**Reason for Modification:**
Doc Description: Wheeling AASF#2 Taxiway Repairs (Construction)			
Proc Type: Central Purchase Order			
Date Issued	**Solicitation Closes**	**Solicitation No**	**Version**
2026-07-27	2026-08-17 13:30	CRFQ 0603 ADJ2700000007	1

BID RECEIVING LOCATION

BID CLERK
DEPARTMENT OF ADMINISTRATION
PURCHASING DIVISION
2019 WASHINGTON ST E
CHARLESTON WV 25305
US

VENDOR

Vendor Customer Code: 000000206945
Vendor Name : McClanahan Construction Company, LLC
Address : 744 Poca River Rd N, Poca, WV 25159
Street : 744 Poca River Rd N
City : Poca
State : WV **Country :** United States **Zip :** 25159
Principal Contact : Bruce D. McClanahan
Vendor Contact Phone: 304-776-3355 **Extension:**

FOR INFORMATION CONTACT THE BUYER
David H Pauline
304-558-0067
david.h.pauline@wv.gov

Vendor Signature X Bruce D. McClanahan **FEIN#** 55-0698258 **DATE** August 20, 2026

All offers subject to all terms and conditions contained in this solicitation

ADDITIONAL INFORMATION

Construction
(Wheeling AASF#2 Taxiway Repairs)

The West Virginia Purchasing Division is soliciting bids on behalf of the Adjutant General's Office, Division of Engineering and Facilities to establish a contract to provide all labor, material, tools, equipment, supplies and supervision necessary to complete Taxiway Repairs project at the AASF#2 site (Army Aviation Support Facility) in Wheeling, Ohio County, WV, per the attached specifications.

XXXXXXXXXXXXXXXXXXXXXXXXXXXXXXXXXXXXXXXXXXXXXXXXXXXX

Mandatory Prebid Meeting:
Wheeling AASF#2 (Army Aviation Support Facility)
538 Girtys Point Road, Wheeling, WV 26003
August 4, 2026 at 11:00 am EST.

XXXXXXXXXXXXXXXXXXXXXXXXXXXXXXXXXXXXXXXXXXXXXXXXXXXX

INVOICE TO		SHIP TO	
ADJUTANT GENERALS OFFICE		ARMY AVIATION SUPPORT FACILITY 2	
1707 COONSKIN DR		538 GIRTYS POINT RD	
CHARLESTON	WV	WHEELING	WV
US		US	

Line	Comm Ln Desc	Qty	Unit Issue	Unit Price	Total Price
1	Wheeling AASF#2 Taxiway Repairs (Construction) BASE BID	1	Base Bid	$2,090,000.00	$2,090,000.00

Comm Code	Manufacturer	Specification	Model #
72000000			

Extended Description:
BASE BID-Provide labor, materials tools, supplies and equipment to provide taxiway repairs per the attached plans and specifications

INVOICE TO	SHIP TO
ADJUTANT GENERALS OFFICE 1707 COONSKIN DR CHARLESTON WV US	ARMY AVIATION SUPPORT FACILITY 2 538 GIRTYS POINT RD WHEELING WV US

Line	Comm Ln Desc	Qty	Unit Issue	Unit Price	Total Price
2	ALTERNATE No.1- Full Slab Replacement in Area #1	1	Alternate No. 1	$639,710.00	$639,710.00

Comm Code	Manufacturer	Specification	Model #
72000000			

Extended Description:
ALTERNATE No. 1-Provide labor, materials tools, supplies and equipment to provide full slab replacement taxiway repairs in Area #1 per the attached plans and specifications.

INVOICE TO	SHIP TO
ADJUTANT GENERALS OFFICE 1707 COONSKIN DR CHARLESTON WV US	ARMY AVIATION SUPPORT FACILITY 2 538 GIRTYS POINT RD WHEELING WV US

Line	Comm Ln Desc	Qty	Unit Issue	Unit Price	Total Price
3	ALTERNATE No.2- Full Slab Replacement in Area #2	1	Alternate No. 2	$636,310.00	$636,310.00

Comm Code	Manufacturer	Specification	Model #
72000000			

Extended Description:
ALTERNATE No. 2-Provide labor, materials tools, supplies and equipment to provide full slab replacement taxiway repairs in Area #2 per the attached plans and specifications.

SCHEDULE OF EVENTS

Line	Event	Event Date
1	Mandatory Prebid Meeting At 11:00 am EST.	2026-08-04
2	Vendor Technical Questions Due By 11:00 am EST.	2026-08-10

INSTRUCTIONS TO VENDORS SUBMITTING BIDS

1. **REVIEW DOCUMENTS THOROUGHLY:** The attached documents contain a solicitation for bids. Please read these instructions and all documents attached in their entirety. These instructions provide critical information about requirements that if overlooked could lead to disqualification of a Vendor's bid. All bids must be submitted in accordance with the provisions contained in these instructions and the Solicitation. Failure to do so may result in disqualification of Vendor's bid.

2. **MANDATORY TERMS:** The Solicitation may contain **mandatory** provisions identified by the use of the words "**must**," "**will**," and "**shall**." Failure to comply with a mandatory term in the Solicitation will result in bid disqualification.

3. **PRE-BID MEETING:** The item identified below shall apply to this Solicitation.

☐ A pre-bid meeting will not be held prior to bid opening

☑ A **MANDATORY PRE-BID** meeting will be held at the following place and time:

Wheeling AASF#2 (Army Aviation Support Facility)
538 Girtys Point Road, Wheeling, WV 26003
August 4, 2026 at 11:00am
See General Construction Specifications for additional information regarding site visits.

All Vendors submitting a bid must attend the **mandatory** pre-bid meeting. Failure to attend the **mandatory** pre-bid meeting shall result in disqualification of the Vendor's bid. No one individual is permitted to represent more than one vendor at the pre-bid meeting. Any individual that does attempt to represent two or more vendors will be required to select one vendor to which the individual's attendance will be attributed. The vendors not selected will be deemed to have not attended the pre-bid meeting unless another individual attended on their behalf.

An attendance sheet provided at the pre-bid meeting shall serve as the official document verifying attendance. Any person attending the pre-bid meeting on behalf of a Vendor must list on the attendance sheet his or her name and the name of the Vendor he or she is representing. It is the Vendor's responsibility to locate the attendance sheet and provide the required information. Failure to complete the attendance sheet as required may result in disqualification of Vendor's bid.

Vendors who arrive after the starting time but prior to the end of the pre-bid will be permitted to sign in but are charged with knowing all matters discussed at the pre-bid.

Any discussions or answers to questions at the pre-bid meeting are preliminary in nature and are non-binding. Official and binding answers to questions will be published in a written addendum to the Solicitation prior to bid opening.

4. **VENDOR QUESTION DEADLINE:** Vendors may submit questions relating to this Solicitation to the Purchasing Division. Questions must be submitted in writing. All questions **must be submitted on or before the date listed below and to the address listed below to be considered**. A written response will be published in a Solicitation addendum if a response is possible and appropriate. Non-written discussions, conversations, or questions and answers regarding this Solicitation are preliminary in nature and are non-binding.

Submitted emails should have the solicitation number in the subject line. Question

Submission Deadline: August 10, 2026, at 11:00 am EST.

Submit Questions to: David Pauline, Senior Buyer
2019 Washington Street, East Charleston, WV 25305
Fax: (304) 558-3970
Email: David.H.Pauline@wv.gov

5. **VERBAL COMMUNICATION:** Any verbal communication between the Vendor and any State personnel is not binding, including verbal communication at the mandatory pre-bid conference. Only information issued in writing and added to the Solicitation by an official written addendum by the Purchasing Division is binding.

6. **BID SUBMISSION:** All bids must be submitted on or before the date and time of the bid opening listed in section 7 below. Vendors can submit bids electronically through *wv*OASIS, in paper form delivered to the Purchasing Division at the address listed below either in person or by courier, or in facsimile form by faxing to the Purchasing Division at the number listed below. Notwithstanding the foregoing, the Purchasing Division may prohibit the submission of bids electronically through *wv*OASIS at its sole discretion. Such a prohibition will be contained and communicated in the *wv*OASIS system resulting in the Vendor's inability to submit bids through *wv*OASIS. The Purchasing Division will not accept bids or modification of bids via email.

Bids submitted in paper, facsimile, or via *wv*OASIS must contain a signature. Failure to submit a bid in any form without a signature will result in rejection of your bid.

A bid submitted in paper or facsimile form should contain the information listed below on the face of the submission envelope or fax cover sheet. Otherwise, the bid may be rejected by the Purchasing Division.

VENDOR NAME:
BUYER:
SOLICITATION NO.:
BID OPENING DATE:
BID OPENING TIME:
FAX NUMBER:

Any bid received by the Purchasing Division staff is considered to be in the possession of the Purchasing Division and will not be returned for any reason.

Bid Delivery Address and Fax Number:
Department of Administration, Purchasing Division 2019 Washington Street East
Charleston, WV 25305-0130
Fax: 304-558-3970

7. **BID OPENING:** Bids submitted in response to this Solicitation will be opened at the location identified below on the date and time listed below. Delivery of a bid after the bid opening date and time will result in bid disqualification. For purposes of this Solicitation, a bid is considered delivered when confirmation of delivery is provided by *wv*OASIS (in the case of electronic submission) or when the bid is time stamped by the official Purchasing Division time clock (in the case of hand delivery or via delivery by mail).

Bid Opening Date and Time: August 17, 2026, at 1:30 pm EST.

Bid Opening Location:
Department of Administration, Purchasing Division
2019 Washington Street East
Charleston, WV 25305-0130

8. **ADDENDUM ACKNOWLEDGEMENT:** Changes or revisions to this Solicitation will be made by an official written addendum issued by the Purchasing Division. Vendor should acknowledge receipt of all addenda issued with this Solicitation by completing an Addendum Acknowledgement Form. Failure to acknowledge addenda may result in bid disqualification. The addendum acknowledgement should be submitted with the bid to expedite document processing.

9. **BID FORMATTING:** Vendor should type or electronically enter the information onto its bid to prevent errors in the evaluation. Failure to type or electronically enter the information may result in bid disqualification.

10. **ALTERNATE MODEL OR BRAND:** Unless the box below is checked, any model, brand, or specification listed in this Solicitation establishes the acceptable level of quality only and is not intended to reflect a preference for, or in any way favor, a particular brand or vendor. Vendors may bid alternates to a listed model or brand provided that the alternate is at least equal to the model or brand and complies with the required specifications. The equality of any alternate being bid shall be determined by the State at its sole discretion. Any Vendor bidding an alternate model or brand **shall** clearly identify the alternate items in its bid and should include manufacturer's specifications, industry literature, and/or any other relevant documentation demonstrating the equality of the alternate items. Failure to provide information for alternate items **may** be grounds for rejection of a Vendor's bid.

☐ This Solicitation is based upon a standardized commodity established under W. Va. Code § 5A-3-61. Vendors are expected to bid the standardized commodity identified. Failure to bid the standardized commodity will result in your firm's bid being rejected.

11. **COMMUNICATION LIMITATIONS:** In accordance with West Virginia Code of State Rules §148-1-6.6.2, communication with the State of West Virginia or any of its employees regarding this Solicitation during the solicitation, bid, evaluation or award periods, except through the Purchasing Division, is strictly prohibited without prior Purchasing Division approval. Purchasing Division approval for such communication is implied for all agency delegated and exempt purchases.

12. **REGISTRATION:** Prior to Contract award, the apparent successful Vendor **must** be properly registered with the West Virginia Purchasing Division and must have paid the $125 fee, if applicable.

13. **UNIT PRICE:** Unit prices **shall** prevail in cases of a discrepancy in the Vendor's bid.

14. **PREFERENCE:** Vendor Preference may be requested in purchases of motor vehicles or construction and maintenance equipment and machinery used in highway and other infrastructure projects. Any request for preference must be submitted in writing with the bid, must specifically identify the preference requested with reference to the applicable subsection of West Virginia Code § 5A-3-37, and must include with the bid any information necessary to evaluate and confirm the applicability of the requested preference. A request form to help facilitate the request can be found at: www.state.wv.us/admin/purchase/vrc/Venpref.pdf.

15A. **RECIPROCAL PREFERENCE:** The State of West Virginia applies a reciprocal preference to all solicitations for commodities and printing in accordance with W. Va. Code § 5A-3-37(b). In effect, non-resident vendors receiving a preference in their home states, will see that same preference granted to West Virginia resident vendors bidding against them in West Virginia. Any request for reciprocal preference must include with the bid any information necessary to evaluate and confirm the applicability of the preference. A request form to help facilitate the request can be found at: www.state.wv.us/admin/purchase/vrc/Venpref.pdf.

15. **SMALL, WOMEN-OWNED, OR MINORITY-OWNED BUSINESSES:**
For any solicitations publicly advertised for bid, in accordance with West Virginia Code §5A-3-37 and W. Va. CSR § 148-22-9, any non-resident vendor certified as a small, women-owned, or minority-owned business under W. Va. CSR § 148-22-9 shall be provided the same preference made available to any resident vendor. Any non-resident small, women-owned, or minority- owned business must identify itself as such in writing, must submit that writing to the Purchasing Division with its bid, and must be properly certified under W. Va. CSR § 148-22-9 prior to contract award to receive the preferences made available to resident vendors.

16. **WAIVER OF MINOR IRREGULARITIES:** The Director reserves the right to waive minor irregularities in bids or specifications in accordance with West Virginia Code of State Rules § 148-1-4.7.

17. **ELECTRONIC FILE ACCESS RESTRICTIONS:** Vendor must ensure that its submission in *wv*OASIS can be accessed and viewed by the Purchasing Division staff immediately upon bid opening. The Purchasing Division will consider any file that cannot be immediately accessed and viewed at the time of the bid opening (such as, encrypted files, password protected files, or incompatible files) to be blank or incomplete as context requires and are therefore unacceptable. A vendor will not be permitted to unencrypt files, remove password protections, or resubmit documents after bid opening to make a file viewable if those documents are required with the bid. A Vendor may be required to provide document passwords or remove access restrictions to allow the Purchasing Division to print or electronically save documents provided that those documents are viewable by the Purchasing Division prior to obtaining the password or removing the access restriction.

18. **NON-RESPONSIBLE:** The Purchasing Division Director reserves the right to reject the bid of any vendor as Non-Responsible in accordance with W. Va. Code of State Rules § 148-1- 5.3, when the Director determines that the vendor submitting the bid does not have the capability to fully perform or lacks the integrity and reliability to assure good-faith performance."

19. **ACCEPTANCE/REJECTION:** The State may accept or reject any bid in whole, or in part in accordance with W. Va. Code of State Rules § 148-1-4.6. and § 148-1-6.3."

20. **WITH THE BID REQUIREMENTS:** In instances where these specifications require documentation or other information with the bid, and a vendor fails to provide it with the bid, the Director of the Purchasing Division reserves the right to request those items after bid opening and prior to contract award pursuant to the authority to waive minor irregularities in bids or specifications under W. Va. CSR § 148-1-4.7. This authority does not apply to instances where state law mandates receipt with the bid.

21. **EMAIL NOTIFICATION OF AWARD:** The Purchasing Division will attempt to provide bidders with e-mail notification of contract award when a solicitation that the bidder participated in has been awarded. For notification purposes, bidders must provide the Purchasing Division with a valid email address in the bid response. Bidders may also monitor *wv*OASIS or the Purchasing Division's website to determine when a contract has been awarded.

22. **EXCEPTIONS AND CLARIFICATIONS:** The Solicitation contains the specifications that **shall** form the basis of a contractual agreement. **Vendor shall clearly mark any exceptions, clarifications, or other proposed modifications in its bid.** Exceptions to, clarifications of, or modifications of a requirement or term and condition of the Solicitation may result in bid disqualification.

GENERAL TERMS AND CONDITIONS:

1. CONTRACTUAL AGREEMENT: Issuance of an Award Document signed by the Purchasing Division Director, or his designee, and approved as to form by the Attorney General's office constitutes acceptance by the State of this Contract made by and between the State of West Virginia and the Vendor. Vendor's signature on its bid, or on the Contract if the Contract is not the result of a bid solicitation, signifies Vendor's agreement to be bound by and accept the terms and conditions contained in this Contract.

2. DEFINITIONS: As used in this Solicitation/Contract, the following terms shall have the meanings attributed to them below. Additional definitions may be found in the specifications included with this Solicitation/Contract.

2.1. "Agency" or **"Agencies"** means the agency, board, commission, or other entity of the State of West Virginia that is identified on the first page of the Solicitation or any other public entity seeking to procure goods or services under this Contract.

2.2. "Bid" or **"Proposal"** means the vendors submitted response to this solicitation.

2.3. "Contract" means the binding agreement that is entered into between the State and the Vendor to provide the goods or services requested in the Solicitation.

2.4. "Director" means the Director of the West Virginia Department of Administration, Purchasing Division.

2.5. "Purchasing Division" means the West Virginia Department of Administration, Purchasing Division.

2.6. "Award Document" means the document signed by the Agency and the Purchasing Division, and approved as to form by the Attorney General, that identifies the Vendor as the contract holder.

2.7. "Solicitation" means the official notice of an opportunity to supply the State with goods or services that is published by the Purchasing Division.

2.8. "State" means the State of West Virginia and/or any of its agencies, commissions, boards, etc. as context requires.

2.9. "Vendor" or **"Vendors"** means any entity submitting a bid in response to the Solicitation, the entity that has been selected as the lowest responsible bidder, or the entity that has been awarded the Contract as context requires.

3. CONTRACT TERM; RENEWAL; EXTENSION: The term of this Contract shall be determined in accordance with the category that has been identified as applicable to this Contract below:

☐ **Term Contract**

Initial Contract Term: The Initial Contract Term will be for a period of _____ _____. The Initial Contract Term becomes effective on the effective start date listed on the first page of this Contract, identified as the State of West Virginia contract cover page containing the signatures of the Purchasing Division, Attorney General, and Encumbrance clerk (or another page identified as _____), and the Initial Contract Term ends on the effective end date also shown on the first page of this Contract.

Renewal Term: This Contract may be renewed upon the mutual written consent of the Agency, and the Vendor, with approval of the Purchasing Division and the Attorney General's office (Attorney General approval is as to form only). Any request for renewal should be delivered to the Agency and then submitted to the Purchasing Division thirty (30) days prior to the expiration date of the initial contract term or appropriate renewal term. A Contract renewal shall be in accordance with the terms and conditions of the original contract. Unless otherwise specified below, renewal of this Contract is limited to _____ successive one (1) year periods or multiple renewal periods of less than one year, provided that the multiple renewal periods do not exceed the total number of months available in all renewal years combined. Automatic renewal of this Contract is prohibited. Renewals must be approved by the Vendor, Agency, Purchasing Division and Attorney General's office (Attorney General approval is as to form only)

> ☐ **Alternate Renewal Term** – This contract may be renewed for _____ successive _____ year periods or shorter periods provided that they do not exceed the total number of months contained in all available renewals. Automatic renewal of this Contract is prohibited. Renewals must be approved by the Vendor, Agency, Purchasing Division and Attorney General's office (Attorney General approval is as to form only)

Delivery Order Limitations: In the event that this contract permits delivery orders, a delivery order may only be issued during the time this Contract is in effect. Any delivery order issued within one year of the expiration of this Contract shall be effective for one year from the date the delivery order is issued. No delivery order may be extended beyond one year after this Contract has expired.

☑ **Fixed Period Contract:** This Contract becomes effective upon Vendor's receipt of the notice to proceed and must be completed within Two hundred seventy (270) calendar days.

☐ **Fixed Period Contract with Renewals:** This Contract becomes effective upon Vendor's receipt of the notice to proceed and part of the Contract more fully described in the attached specifications must be completed within _____ days. Upon completion of the work covered by the preceding sentence, the vendor agrees that:

☐ the contract will continue for _____ years;

☐ the contract may be renewed for _____ successive _____ year periods or shorter periods provided that they do not exceed the total number of months contained in all available renewals. Automatic renewal of this Contract is prohibited. Renewals must be approved by the Vendor, Agency, Purchasing Division and Attorney General's Office (Attorney General approval is as to form only).

☐ **One-Time Purchase:** The term of this Contract shall run from the issuance of the Award Document until all of the goods contracted for have been delivered, but in no event will this Contract extend for more than one fiscal year.

☐ **Construction/Project Oversight:** This Contract becomes effective on the effective start date listed on the first page of this Contract, identified as the State of West Virginia contract cover page containing the signatures of the Purchasing Division, Attorney General, and Encumbrance clerk (or another page identified as _____), and continues until the project for which the vendor is providing oversight is complete.

☐ **Other:** Contract Term specified in _____

4. AUTHORITY TO PROCEED: Vendor is authorized to begin performance of this contract on the date of encumbrance listed on the front page of the Award Document unless either the box for "Fixed Period Contract" or "Fixed Period Contract with Renewals" has been checked in Section 3 above. If either "Fixed Period Contract" or "Fixed Period Contract with Renewals" has been checked, Vendor must not begin work until it receives a separate notice to proceed from the State. The notice to proceed will then be incorporated into the Contract via change order to memorialize the official date that work commenced.

5. QUANTITIES: The quantities required under this Contract shall be determined in accordance with the category that has been identified as applicable to this Contract below.

☐ **Open End Contract:** Quantities listed in this Solicitation/Award Document are approximations only, based on estimates supplied by the Agency. It is understood and agreed that the Contract shall cover the quantities actually ordered for delivery during the term of the Contract, whether more or less than the quantities shown.

☐ **Service:** The scope of the service to be provided will be more clearly defined in the specifications included herewith.

☑ **Combined Service and Goods:** The scope of the service and deliverable goods to be provided will be more clearly defined in the specifications included herewith.

☐ **One-Time Purchase:** This Contract is for the purchase of a set quantity of goods that are identified in the specifications included herewith. Once those items have been delivered, no additional goods may be procured under this Contract without an appropriate change order approved by the Vendor, Agency, Purchasing Division, and Attorney General's office.

☑ **Construction:** This Contract is for construction activity more fully defined in the specifications.

6. EMERGENCY PURCHASES: The Purchasing Division Director may authorize the Agency to purchase goods or services in the open market that Vendor would otherwise provide under this Contract if those goods or services are for immediate or expedited delivery in an emergency. Emergencies shall include, but are not limited to, delays in transportation or an unanticipated increase in the volume of work. An emergency purchase in the open market, approved by the Purchasing Division Director, shall not constitute of breach of this Contract and shall not entitle the Vendor to any form of compensation or damages. This provision does not excuse the State from fulfilling its obligations under a One-Time Purchase contract.

7. REQUIRED DOCUMENTS: All of the items checked in this section must be provided to the Purchasing Division by the Vendor as specified:

☑ **LICENSE(S) / CERTIFICATIONS / PERMITS:** In addition to anything required under the Section of the General Terms and Conditions entitled Licensing, the apparent successful Vendor shall furnish proof of the following licenses, certifications, and/or permits upon request and in a form acceptable to the State. The request may be prior to or after contract award at the State's sole discretion.

☑ West Virginia Contractor's License

☐

☐

☐

The apparent successful Vendor shall also furnish proof of any additional licenses or certifications contained in the specifications regardless of whether or not that requirement is listed above.

8. INSURANCE: The apparent successful Vendor shall furnish proof of the insurance identified by a checkmark below prior to Contract award. The insurance coverages identified below must be maintained throughout the life of this contract. Thirty (30) days prior to the expiration of the insurance policies, Vendor shall provide the Agency with proof that the insurance mandated herein has been continued. Vendor must also provide Agency with immediate notice of any changes in its insurance policies, including but not limited to, policy cancelation, policy reduction, or change in insurers. The apparent successful Vendor shall also furnish proof of any additional insurance requirements contained in the specifications prior to Contract award regardless of whether that insurance requirement is listed in this section.

Vendor must maintain:

☑ **Commercial General Liability Insurance** in at least an amount of: $1,000,000.00 per occurrence.

☑ **Automobile Liability Insurance** in at least an amount of: $1,000,000.00 per occurrence.

☐ **Professional/Malpractice/Errors and Omission Insurance** in at least an amount of: _____per occurrence. Notwithstanding the forgoing, Vendor's are not required to list the State as an additional insured for this type of policy.

☐ **Commercial Crime and Third Party Fidelity Insurance** in an amount of: _____ per occurrence.

☐ **Cyber Liability Insurance** in an amount of: _____ per occurrence.

☐ **Builders Risk Insurance** in an amount equal to 100% of the amount of the Contract.

☐ **Pollution Insurance** in an amount of: _____ per occurrence.

☐ **Aircraft Liability** in an amount of: _____ per occurrence.

☐

☐

☐

☐

9. WORKERS' COMPENSATION INSURANCE: Vendor shall comply with laws relating to workers compensation, shall maintain workers' compensation insurance when required, and shall furnish proof of workers' compensation insurance upon request.

10. VENUE: All legal actions for damages brought by Vendor against the State shall be brought in the West Virginia Claims Commission. Other causes of action must be brought in the West Virginia court authorized by statute to exercise jurisdiction over it.

11. LIQUIDATED DAMAGES: This clause shall in no way be considered exclusive and shall not limit the State or Agency's right to pursue any other available remedy. Vendor shall pay liquidated damages in the amount specified below or as described in the specifications:

☐ _____ for _____.

☑ Liquidated Damages Contained in the Specifications.

☐ Liquidated Damages Are Not Included in this Contract.

12. ACCEPTANCE: Vendor's signature on its bid, or on the certification and signature page, constitutes an offer to the State that cannot be unilaterally withdrawn, signifies that the product or service proposed by vendor meets the mandatory requirements contained in the Solicitation for that product or service, unless otherwise indicated, and signifies acceptance of the terms and conditions contained in the Solicitation unless otherwise indicated.

13. PRICING: The pricing set forth herein is firm for the life of the Contract, unless specified elsewhere within this Solicitation/Contract by the State. A Vendor's inclusion of price adjustment provisions in its bid, without an express authorization from the State in the Solicitation to do so, may result in bid disqualification. Notwithstanding the foregoing, Vendor must extend any publicly advertised sale price to the State and invoice at the lower of the contract price or the publicly advertised sale price.

14. PAYMENT IN ARREARS: Payments for goods/services will be made in arrears only upon receipt of a proper invoice, detailing the goods/services provided or receipt of the goods/services, whichever is later. Notwithstanding the foregoing, payments for software maintenance, licenses, or subscriptions may be paid annually in advance.

15. PAYMENT METHODS: Vendor must accept payment by electronic funds transfer and P-Card. (The State of West Virginia's Purchasing Card program, administered under contract by a banking institution, processes payment for goods and services through state designated credit cards.)

16. TAXES: The Vendor shall pay any applicable sales, use, personal property or any other taxes arising out of this Contract and the transactions contemplated thereby. The State of West Virginia is exempt from federal and state taxes and will not pay or reimburse such taxes.

17. ADDITIONAL FEES: Vendor is not permitted to charge additional fees or assess additional charges that were not either expressly provided for in the solicitation published by the State of West Virginia, included in the Contract, or included in the unit price or lump sum bid amount that Vendor is required by the solicitation to provide. Including such fees or charges as notes to the solicitation may result in rejection of vendor's bid. Requesting such fees or charges be paid after the contract has been awarded may result in cancellation of the contract.

18. FUNDING: This Contract shall continue for the term stated herein, contingent upon funds being appropriated by the Legislature or otherwise being made available. In the event funds are not appropriated or otherwise made available, this Contract becomes void and of no effect beginning on July 1 of the fiscal year for which funding has not been appropriated or otherwise made available. If that occurs, the State may notify the Vendor that an alternative source of funding has been obtained and thereby avoid the automatic termination. Non-appropriation or non-funding shall not be considered an event of default.

19. CANCELLATION: The Purchasing Division Director reserves the right to cancel this Contract immediately upon written notice to the vendor if the materials or workmanship supplied do not conform to the specifications contained in the Contract. The Purchasing Division Director may also cancel any purchase or Contract upon 30 days written notice to the Vendor in accordance with West Virginia Code of State Rules § 148-1-5.2.b.

20. TIME: Time is of the essence regarding all matters of time and performance in this Contract.

21. APPLICABLE LAW: This Contract is governed by and interpreted under West Virginia law without giving effect to its choice of law principles. Any information provided in specification manuals, or any other source, verbal or written, which contradicts or violates the West Virginia Constitution, West Virginia Code, or West Virginia Code of State Rules is void and of no effect.

22. COMPLIANCE WITH LAWS: Vendor shall comply with all applicable federal, state, and local laws, regulations and ordinances. By submitting a bid, Vendor acknowledges that it has reviewed, understands, and will comply with all applicable laws, regulations, and ordinances.

> **SUBCONTRACTOR COMPLIANCE:** Vendor shall notify all subcontractors providing commodities or services related to this Contract that as subcontractors, they too are required to comply with all applicable laws, regulations, and ordinances. Notification under this provision must occur prior to the performance of any work under the contract by the subcontractor.

23. ARBITRATION: Any references made to arbitration contained in this Contract, Vendor's bid, or in any American Institute of Architects documents pertaining to this Contract are hereby deleted, void, and of no effect.

24. MODIFICATIONS: This writing is the parties' final expression of intent. Notwithstanding anything contained in this Contract to the contrary no modification of this Contract shall be binding without mutual written consent of the Agency, and the Vendor, with approval of the Purchasing Division and the Attorney General's office (Attorney General approval is as to form only). Any change to existing contracts that adds work or changes contract cost, and were not included in the original contract, must be approved by the Purchasing Division and the Attorney General's Office (as to form) prior to the implementation of the change or commencement of work affected by the change.

25. WAIVER: The failure of either party to insist upon a strict performance of any of the terms or provision of this Contract, or to exercise any option, right, or remedy herein contained, shall not be construed as a waiver or a relinquishment for the future of such term, provision, option, right, or remedy, but the same shall continue in full force and effect. Any waiver must be expressly stated in writing and signed by the waiving party.

26. SUBSEQUENT FORMS: The terms and conditions contained in this Contract shall supersede any and all subsequent terms and conditions which may appear on any form documents submitted by Vendor to the Agency or Purchasing Division such as price lists, order forms, invoices, sales agreements, or maintenance agreements, and includes internet websites or other electronic documents. Acceptance or use of Vendor's forms does not constitute acceptance of the terms and conditions contained thereon.

27. ASSIGNMENT: Neither this Contract nor any monies due, or to become due hereunder, may be assigned by the Vendor without the express written consent of the Agency, the Purchasing Division, the Attorney General's office (as to form only), and any other government agency or office that may be required to approve such assignments.

28. WARRANTY: The Vendor expressly warrants that the goods and/or services covered by this Contract will: (a) conform to the specifications, drawings, samples, or other description furnished or specified by the Agency; (b) be merchantable and fit for the purpose intended; and (c) be free from defect in material and workmanship.

29. STATE EMPLOYEES: State employees are not permitted to utilize this Contract for personal use and the Vendor is prohibited from permitting or facilitating the same.

30. PRIVACY, SECURITY, AND CONFIDENTIALITY: The Vendor agrees that it will not disclose to anyone, directly or indirectly, any such personally identifiable information or other confidential information gained from the Agency, unless the individual who is the subject of the information consents to the disclosure in writing or the disclosure is made pursuant to the Agency's policies, procedures, and rules. Vendor further agrees to comply with the Confidentiality Policies and Information Security Accountability Requirements, set forth in www.state.wv.us/admin/purchase/privacy.

31. YOUR SUBMISSION IS A PUBLIC DOCUMENT: Vendor's entire response to the Solicitation and the resulting Contract are public documents. As public documents, they will be disclosed to the public following the bid/proposal opening or award of the contract, as required by the competitive bidding laws of West Virginia Code §§ 5A-3-1 et seq., 5-22-1 et seq., and 5G-1-1 et seq. and the Freedom of Information Act West Virginia Code §§ 29B-1-1 et seq.

DO NOT SUBMIT MATERIAL YOU CONSIDER TO BE CONFIDENTIAL, A TRADE SECRET, OR OTHERWISE NOT SUBJECT TO PUBLIC DISCLOSURE.

Submission of any bid, proposal, or other document to the Purchasing Division constitutes your explicit consent to the subsequent public disclosure of the bid, proposal, or document. The Purchasing Division will disclose any document labeled "confidential," "proprietary," "trade secret," "private," or labeled with any other claim against public disclosure of the documents, to include any "trade secrets" as defined by West Virginia Code § 47-22-1 et seq. All submissions are subject to public disclosure without notice.

32. LICENSING: In accordance with West Virginia Code of State Rules § 148-1-6.1.e, Vendor must be licensed and in good standing in accordance with any and all state and local laws and requirements by any state or local agency of West Virginia, including, but not limited to, the West Virginia Secretary of State's Office, the West Virginia Tax Department, West Virginia Insurance Commission, or any other state agency or political subdivision. Obligations related to political subdivisions may include, but are not limited to, business licensing, business and occupation taxes, inspection compliance, permitting, etc. Upon request, the Vendor must provide all necessary releases to obtain information to enable the Purchasing Division Director or the Agency to verify that the Vendor is licensed and in good standing with the above entities.

> **SUBCONTRACTOR COMPLIANCE:** Vendor shall notify all subcontractors providing commodities or services related to this Contract that as subcontractors, they too are required to be licensed, in good standing, and up-to-date on all state and local obligations as described in this section. Obligations related to political subdivisions may include, but are not limited to, business licensing, business and occupation taxes, inspection compliance, permitting, etc. Notification under this provision must occur prior to the performance of any work under the contract by the subcontractor.

33. ANTITRUST: In submitting a bid to, signing a contract with, or accepting a Award Document from any agency of the State of West Virginia, the Vendor agrees to convey, sell, assign, or transfer to the State of West Virginia all rights, title, and interest in and to all causes of action it may now or hereafter acquire under the antitrust laws of the United States and the State of West Virginia for price fixing and/or unreasonable restraints of trade relating to the particular commodities or services purchased or acquired by the State of West Virginia. Such assignment shall be made and become effective at the time the purchasing agency tenders the initial payment to Vendor.

34. VENDOR NON-CONFLICT: Neither Vendor nor its representatives are permitted to have any interest, nor shall they acquire any interest, direct or indirect, which would compromise the performance of its services hereunder. Any such interests shall be promptly presented in detail to the Agency.

35. VENDOR RELATIONSHIP: The relationship of the Vendor to the State shall be that of an independent contractor and no principal-agent relationship or employer-employee relationship is contemplated or created by this Contract. The Vendor as an independent contractor is solely liable for the acts and omissions of its employees and agents. Vendor shall be responsible for selecting, supervising, and compensating any and all individuals employed pursuant to the terms of this Solicitation and resulting contract. Neither the Vendor, nor any employees or subcontractors of the Vendor, shall be deemed to be employees of the State for any purpose whatsoever. Vendor shall be exclusively responsible for payment of employees and contractors for all wages and salaries, taxes, withholding payments, penalties, fees, fringe benefits, professional liability insurance premiums, contributions to insurance and pension, or other deferred compensation plans, including but not limited to, Workers' Compensation and Social Security obligations, licensing fees, etc. and the filing of all necessary documents, forms, and returns pertinent to all of the foregoing.

Vendor shall hold harmless the State, and shall provide the State and Agency with a defense against any and all claims including, but not limited to, the foregoing payments, withholdings, contributions, taxes, Social Security taxes, and employer income tax returns.

36. INDEMNIFICATION: The Vendor agrees to indemnify, defend, and hold harmless the State and the Agency, their officers, and employees from and against: (1) Any claims or losses for services rendered by any subcontractor, person, or firm performing or supplying services, materials, or supplies in connection with the performance of the Contract; (2) Any claims or losses resulting to any person or entity injured or damaged by the Vendor, its officers, employees, or subcontractors by the publication, translation, reproduction, delivery, performance, use, or disposition of any data used under the Contract in a manner not authorized by the Contract, or by Federal or State statutes or regulations; and (3) Any failure of the Vendor, its officers, employees, or subcontractors to observe State and Federal laws including, but not limited to, labor and wage and hour laws.

37. NO DEBT CERTIFICATION: In accordance with West Virginia Code §§ 5A-3-10a and 5-22-1(i), the State is prohibited from awarding a contract to any bidder that owes a debt to the State or a political subdivision of the State. By submitting a bid, or entering into a contract with the State, Vendor is affirming that (1) for construction contracts, the Vendor is not in default on any monetary obligation owed to the state or a political subdivision of the state, and (2) for all other contracts, neither the Vendor nor any related party owe a debt as defined above, and neither the Vendor nor any related party are in employer default as defined in the statute cited above unless the debt or employer default is permitted under the statute.

38. CONFLICT OF INTEREST: Vendor, its officers or members or employees, shall not presently have or acquire an interest, direct or indirect, which would conflict with or compromise the performance of its obligations hereunder. Vendor shall periodically inquire of its officers, members and employees to ensure that a conflict of interest does not arise. Any conflict of interest discovered shall be promptly presented in detail to the Agency.

39. REPORTS: Vendor shall provide the Agency and/or the Purchasing Division with the following reports identified by a checked box below:

☑ Such reports as the Agency and/or the Purchasing Division may request. Requested reports may include, but are not limited to, quantities purchased, agencies utilizing the contract, total contract expenditures by agency, etc.

☐ Quarterly reports detailing the total quantity of purchases in units and dollars, along with a listing of purchases by agency. Quarterly reports should be delivered to the Purchasing Division via email at purchasing.division@wv.gov.

40. BACKGROUND CHECK: In accordance with W. Va. Code § 15-2D-3, the State reserves the right to prohibit a service provider's employees from accessing sensitive or critical information or to be present at the Capitol complex based upon results addressed from a criminal background check. Service providers should contact the West Virginia Division of Protective Services by phone at (304) 558-9911 for more information.

41. PREFERENCE FOR USE OF DOMESTIC STEEL PRODUCTS: Except when authorized by the Director of the Purchasing Division pursuant to W. Va. Code § 5A-3-56, no contractor may use or supply steel products for a State Contract Project other than those steel products made in the United States. A contractor who uses steel products in violation of this section may be subject to civil penalties pursuant to W. Va. Code § 5A-3-56. As used in this section:

a. "State Contract Project" means any erection or construction of, or any addition to, alteration of or other improvement to any building or structure, including, but not limited to, roads or highways, or the installation of any heating or cooling or ventilating plants or other equipment, or the supply of and materials for such projects, pursuant to a contract with the State of West Virginia for which bids were solicited on or after June 6, 2001.

b. "Steel Products" means products rolled, formed, shaped, drawn, extruded, forged, cast, fabricated or otherwise similarly processed, or processed by a combination of two or more or such operations, from steel made by the open heath, basic oxygen, electric furnace, Bessemer or other steel making process.

c. The Purchasing Division Director may, in writing, authorize the use of foreign steel products if:

    1. The cost for each contract item used does not exceed one tenth of one percent (.1%) of the total contract cost or two thousand five hundred dollars ($2,500.00), whichever is greater. For the purposes of this section, the cost is the value of the steel product as delivered to the project; or

    2. The Director of the Purchasing Division determines that specified steel materials are not produced in the United States in sufficient quantity or otherwise are not reasonably available to meet contract requirements.

42. PREFERENCE FOR USE OF DOMESTIC ALUMINUM, GLASS, AND STEEL: In Accordance with W. Va. Code § 5-19-1 et seq., and W. Va. CSR § 148-10-1 et seq., for every contract or subcontract, subject to the limitations contained herein, for the construction, reconstruction, alteration, repair, improvement or maintenance of public works or for the purchase of any item of machinery or equipment to be used at sites of public works, only domestic aluminum, glass or steel products shall be supplied unless the spending officer determines, in writing, after the receipt of offers or bids, (1) that the cost of domestic aluminum, glass or steel products is unreasonable or inconsistent with the public interest of the State of West Virginia, (2) that domestic aluminum, glass or steel products are not produced in sufficient quantities to meet the contract requirements, or (3) the available domestic aluminum, glass, or steel do not meet the contract specifications. This provision only applies to public works contracts awarded in an amount more than fifty thousand dollars ($50,000) or public works contracts that require more than ten thousand pounds of steel products.

The cost of domestic aluminum, glass, or steel products may be unreasonable if the cost is more than twenty percent (20%) of the bid or offered price for foreign made aluminum, glass, or steel products. If the domestic aluminum, glass or steel products to be supplied or produced in a "substantial labor surplus area", as defined by the United States Department of Labor, the cost of domestic aluminum, glass, or steel products may be unreasonable if the cost is more than thirty percent (30%) of the bid or offered price for foreign made aluminum, glass, or steel products. This preference shall be applied to an item of machinery or equipment, as indicated above, when the item is a single unit of equipment or machinery manufactured primarily of aluminum, glass or steel, is part of a public works contract and has the sole purpose or of being a permanent part of a single public works project. This provision does not apply to equipment or machinery purchased by a spending unit for use by that spending unit and not as part of a single public works project.

All bids and offers including domestic aluminum, glass or steel products that exceed bid or offer prices including foreign aluminum, glass or steel products after application of the preferences provided in this provision may be reduced to a price equal to or lower than the lowest bid or offer price for foreign aluminum, glass or steel products plus the applicable preference. If the reduced bid or offer prices are made in writing and supersede the prior bid or offer prices, all bids or offers, including the reduced bid or offer prices, will be reevaluated in accordance with this rule.

43. INTERESTED PARTY SUPPLEMENTAL DISCLOSURE: W. Va. Code § 6D-1-2 requires that for contracts with an actual or estimated value of at least $1 million, the Vendor must submit to the Agency a disclosure of interested parties prior to beginning work under this Contract. Additionally, the Vendor must submit a supplemental disclosure of interested parties reflecting any new or differing interested parties to the contract, which were not included in the original pre-work interested party disclosure, within 30 days following the completion or termination of the contract. A copy of that form is included with this solicitation or can be obtained from the WV Ethics Commission. This requirement does not apply to publicly traded companies listed on a national or international stock exchange. A more detailed definition of interested parties can be obtained from the form referenced above.

44. PROHIBITION AGAINST USED OR REFURBISHED: Unless expressly permitted in the solicitation published by the State, Vendor must provide new, unused commodities, and is prohibited from supplying used or refurbished commodities, in fulfilling its responsibilities under this Contract.

45. VOID CONTRACT CLAUSES: This Contract is subject to the provisions of West Virginia Code § 5A-3-62, which automatically voids certain contract clauses that violate State law.

46. ISRAEL BOYCOTT: Bidder understands and agrees that, pursuant to W. Va. Code § 5A-3-63, it is prohibited from engaging in a boycott of Israel during the term of this contract.

ADDITIONAL TERMS AND CONDITIONS (Construction Contracts Only)

1. CONTRACTOR'S LICENSE: Until June 15, 2021, West Virginia Code § 21-11-2, and after that date, § 30-42-2, requires that all persons desiring to perform contracting work in this state be licensed. The West Virginia Contractors Licensing Board is empowered to issue the contractor's license. Applications for a contractor's license may be made by contacting the West Virginia Contractor Licensing Board.

The apparent successful Vendor must furnish a copy of its contractor's license prior to the issuance of a contract award document.

2. BONDS: The following bonds must be submitted:

☑ **BID BOND:** Pursuant to the requirements contained in W. Va. Code § 5-22-1(c), All Vendors submitting a bid on a construction project shall furnish a valid bid bond in the amount of five percent (5%) of the total amount of the bid protecting the State of West Virginia. **THE BID BOND MUST BE SUBMITTED WITH THE BID OR VENDOR'S BID WILL BE DISQUALIFIED.**

☑ **PERFORMANCE BOND:** The apparent successful Vendor shall provide a performance bond in the amount of 100% of the contract. The performance bond must be received by the Purchasing Division prior to Contract award. (Attorney General requires use of the State approved bond forms found at: www.state.wv.us/admin/purchase/forms2.html)

☑ **LABOR/MATERIAL PAYMENT BOND**: The apparent successful Vendor shall provide a labor/material payment bond in the amount of 100% of the Contract value. The labor/material payment bond must be delivered to the Purchasing Division prior to Contract award. (Attorney General requires use of the State approved bond forms found at: www.state.wv.us/admin/purchase/forms2.html)

☐ **MAINTENANCE BOND:** The apparent successful Vendor shall provide a two (2) year maintenance bond covering the roofing system if the work impacts an existing roof. The amount of the bond must be equal to the price associated with the percentage of the project impacting the roof. The maintenance bond must be issued and delivered to the Purchasing Division prior to Contract award. (Attorney General requires use of the State approved bond forms found at: www.state.wv.us/admin/purchase/forms2.html)

At a minimum, all construction projects require a bid bond, performance bond, and labor/material payment bond. Failure on the part of the state of West Virginia to checkmark the required bonds above does not relieve the vendor from the legal requirement of providing these bonds.

In lieu of the Bid Bond, the Vendor may provide certified checks, cashier's checks, or irrevocable letters of credit. Any certified check, cashier's check, or irrevocable letter of credit provided in lieu of the bid bond must be of the same amount required of the Bid Bond and delivered with the bid.

3. DRUG-FREE WORKPLACE AFFIDAVIT: W. Va. Code § 21-1D-5 provides that any solicitation for a public improvement contract requires each Vendor that submits a bid for the work to submit an affidavit that the Vendor has a written plan for a drug-free workplace policy. If the affidavit is not submitted with the bid submission, the Purchasing Division shall promptly request by telephone and electronic mail that the low bidder and second low bidder provide the affidavit within one business day of the request. Failure to submit the affidavit within one business day of receiving the request shall result in disqualification of the bid. To comply with this law, Vendor should complete the enclosed drug-free workplace affidavit and submit the same with its bid. Failure to submit the signed and notarized drugfree workplace affidavit or a similar affidavit that fully complies with the requirements of the applicable code, within one business day of being requested to do so shall result in disqualification of Vendor's bid. Pursuant to W. Va. Code 21-1D-2(b) and (k), this provision does not apply to public improvement contracts the value of which is $100,000 or less or temporary or emergency repairs.

3.1. DRUG-FREE WORKPLACE POLICY: Pursuant to W. Va. Code § 21-1D-4, Vendor and its subcontractors must implement and maintain a written drug-free workplace policy that complies with said article. The awarding public authority shall cancel this contract if: (1) Vendor fails to implement and maintain a written drug-free workplace policy described in the preceding paragraph, (2) Vendor fails to provide information regarding implementation of its drug-free workplace policy at the request of the public authority; or (3) Vendor provides to the public authority false information regarding the contractor's drug-free workplace policy.

Pursuant to W. Va. Code 21-1D-2(b) and (k), this provision does not apply to public improvement contracts the value of which is $100,000 or less or temporary or emergency repairs.

4. DRUG FREE WORKPLACE REPORT: Pursuant to W. Va. Code § 21-1D-7b, no less than once per year, or upon completion of the project, every contractor shall provide a certified report to the public authority which let the contract. For contracts over $25,000, the public authority shall be the West Virginia Purchasing Division. For contracts of $25,000 or less, the public authority shall be the agency issuing the contract. The report shall include:

(1) Information to show that the education and training service to the requirements of West Virginia Code § 21-1D-5 was provided;

(2) The name of the laboratory certified by the United States Department of Health and Human Services or its successor that performs the drug tests;

(3) The average number of employees in connection with the construction on the public improvement;

(4) Drug test results for the following categories including the number of positive tests and the number of negative tests: (A) Pre-employment and new hires; (B) Reasonable suspicion; (C) Post-accident; and (D) Random.

Vendor should utilize the attached Certified Drug Free Workplace Report Coversheet when submitting the report required hereunder. Pursuant to W. Va. Code 21-1D-2(b) and (k), this provision does not apply to public improvement contracts the value of which is $100,000 or less or temporary or emergency repairs.

5. AIA DOCUMENTS: All construction contracts that will be completed in conjunction with architectural services procured under Chapter 5G of the West Virginia Code will be governed by the attached AIA documents, as amended by the Supplementary Conditions for the State of West Virginia, in addition to the terms and conditions contained herein.

6. PROHIBITION AGAINST GENERAL CONDITIONS: Notwithstanding anything contained in the AIA Documents or the Supplementary Conditions, the State of West Virginia will not pay for general conditions, or winter conditions, or any other condition representing a delay in the contracts. The Vendor is expected to mitigate delay costs to the greatest extent possible and any costs associated with Delays must be specifically and concretely identified. The state will not consider an average daily rate multiplied by the number of days extended to be an acceptable charge.

7. GREEN BUILDINGS MINIMUM ENERGY STANDARDS: In accordance with § 22-29-4, all new building construction projects of public agencies that have not entered the schematic design phase prior to July 1, 2012, or any building construction project receiving state grant funds and appropriations, including public schools, that have not entered the schematic design phase prior to July 1, 2012, shall be designed and constructed complying with the ICC International Energy Conservation Code, adopted by the State Fire Commission, and the ANSI/ASHRAE/IESNA Standard 90.1-2007: Provided, That if any construction project has a commitment of federal funds to pay for a portion of such project, this provision shall only apply to the extent such standards are consistent with the federal standards.

8. LOCAL LABOR MARKET HIRING REQUIREMENT: Pursuant to West Virginia Code §21-1C-1 et seq., Employers shall hire at least seventy-five percent of employees for public improvement construction projects from the local labor market, to be rounded off, with at least two employees from outside the local labor market permissible for each employer per project.

Any employer unable to employ the minimum number of employees from the local labor market shall inform the nearest office of Workforce West Virginia of the number of qualified employees needed and provide a job description of the positions to be filled.

If, within three business days following the placing of a job order, Workforce West Virginia is unable to refer any qualified job applicants to the employer or refers less qualified job applicants than the number requested, then Workforce West Virginia shall issue a waiver to the employer stating the unavailability of applicant and shall permit the employer to fill any positions covered by the waiver from outside the local labor market. The waiver shall be in writing and shall be issued within the prescribed three days. A waiver certificate shall be sent to both the employer for its permanent project records and to the public authority.

Any employer who violates this requirement is subject to a civil penalty of $250 per each employee less than the required threshold of seventy-five percent per day of violation after receipt of a notice of violation.

Any employer that continues to violate any provision of this article more than fourteen calendar days after receipt of a notice of violation is subject to a civil penalty of $500 per each employee less than the required threshold of seventy-five percent per day of violation.

The following terms used in this section have the meaning shown below.

(1) The term “construction project” means any construction, reconstruction, improvement, enlargement, painting, decorating or repair of any public improvement let to contract in an amount equal to or greater than $500,000. The term “construction project” does not include temporary or emergency repairs;

(2) The term “employee” means any person hired or permitted to perform hourly work for wages by a person, firm or corporation in the construction industry; The term “employee” does not include:(i) Bona fide employees of a public authority or individuals engaged in making temporary or emergency repairs;(ii) Bona fide independent contractors; or(iii) Salaried supervisory personnel necessary to assure efficient execution of the employee's work;

(3) The term “employer” means any person, firm or corporation employing one or more employees on any public improvement and includes all contractors and subcontractors;

(4) The term “local labor market” means every county in West Virginia and any county outside of West Virginia if any portion of that county is within fifty miles of the border of West Virginia;

(5) The term “public improvement” includes the construction of all buildings, roads, highways, bridges, streets, alleys, sewers, ditches, sewage disposal plants, waterworks, airports and all other structures that may be let to contract by a public authority, excluding improvements funded, in whole or in part, by federal funds.

9. DAVIS-BACON AND RELATED ACT WAGE RATES:

☑ The work performed under this contract is federally funded in whole, or in part. Pursuant to 2 CFR 200.317, Vendors are required to pay applicable Davis-Bacon wage rates.

☐ The work performed under this contract is not subject to Davis-Bacon wage rates.

10. SUBCONTRACTOR LIST SUBMISSION: In accordance with W. Va. Code § 5-22-1, the apparent low bidder on a contract valued at more than $250,000.00 for the construction, alteration, decoration, painting or improvement of a new or existing building or structure shall submit a list of all subcontractors who will perform more than $25,000.00 of work on the project including labor and materials. (This section does not apply to any other construction projects, such as highway, mine reclamation, water or sewer projects.) The subcontractor list shall be provided to the Purchasing Division within one business day of the opening of bids for review.
If the apparent low bidder fails to submit the subcontractor list, the Purchasing Division shall promptly request by telephone and electronic mail that the low bidder and second low bidder provide the subcontractor list within one business day of the request. Failure to submit the subcontractor list within one business day of receiving the request shall result in disqualification of the bid.

If no subcontractors who will perform more than $25,000.00 of work are to be used to complete the project, the apparent low bidder must make this clear on the subcontractor list, in the bid itself, or in response to the Purchasing Division's request for the subcontractor list.

a. Required Information. The subcontractor list must contain the following information:

i. Bidder's name

ii. Name of each subcontractor performing more than $25,000 of work on the project.

iii. The license number of each subcontractor, as required by W. Va. Code § 21-11-1 et. seq.

iv. If applicable, a notation that no subcontractor will be used to perform more than $25,000.00 of work. (This item iv. is not required if the vendor makes this clear in the bid itself or in documentation following the request for the subcontractor list.)

b. Subcontractor List Submission Form: The subcontractor list may be submitted in any form, including the attached form, as long as the required information noted above is included. If any information is missing from the bidder's subcontractor list submission, it may be obtained from other documents such as bids, emails, letters, etc. that accompany the subcontractor list submission.

c. Substitution of Subcontractor. Written approval must be obtained from the State Spending Unit before any subcontractor substitution is permitted. Substitutions are not permitted unless:

i. The subcontractor listed in the original bid has filed for bankruptcy;

ii. The subcontractor in the original bid has been debarred or suspended; or

iii. The contractor certifies in writing that the subcontractor listed in the original bid fails, is unable, or refuses to perform his subcontract.

Subcontractor List Submission (Construction Contracts Only)

Bidder's Name: McClanahan Construction Company, LLC

☐ Check this box if no subcontractors will perform more than $25,000.00 of work to complete the project.

Subcontractor Name	License Number if Required by W. Va. Code § 21-11-1 et. seq.
Mid Atlantic Maintenance	WV047493
Wilsons Blacktop	WV000487

Attach additional pages if necessary

DESIGNATED CONTACT: Vendor appoints the individual identified in this Section as the Contract Administrator and the initial point of contact for matters relating to this Contract.

(Printed Name and Title) Bruce D. McClanahan, Managing Member

(Address) 744 Poca River Rd N, Poca, WV 25159

(Phone Number) / (Fax Number) 304-776-3355

(email address) bruce@mcclanahanconstruction.com

CERTIFICATION AND SIGNATURE: By signing below, or submitting documentation through *wv*OASIS, I certify that: I have reviewed this Solicitation/Contract in its entirety; that I understand the requirements, terms and conditions, and other information contained herein; that this bid, offer or proposal constitutes an offer to the State that cannot be unilaterally withdrawn; that the product or service proposed meets the mandatory requirements contained in the Solicitation/Contract for that product or service, unless otherwise stated herein; that the Vendor accepts the terms and conditions contained in the Solicitation, unless otherwise stated herein; that I am submitting this bid, offer or proposal for review and consideration; that this bid or offer was made without prior understanding, agreement, or connection with any entity submitting a bid or offer for the same material, supplies, equipment or services; that this bid or offer is in all respects fair and without collusion or fraud; that this Contract is accepted or entered into without any prior understanding, agreement, or connection to any other entity that could be considered a violation of law; that I am authorized by the Vendor to execute and submit this bid, offer, or proposal, or any documents related thereto on Vendor's behalf; that I am authorized to bind the vendor in a contractual relationship; and that to the best of my knowledge, the vendor has properly registered with any State agency that may require registration.

By signing below, I further certify that I understand this Contract is subject to the provisions of West Virginia Code § 5A-3-62, which automatically voids certain contract clauses that violate State law; and that pursuant to W. Va. Code 5A-3-63, the entity entering into this contract is prohibited from engaging in a boycott against Israel.

McClanahan Construction Company, LLC
(Company)

Bruce D. McClanahan
(Signature of Authorized Representative)

Bruce D. McClanahan, Managing Member August 20, 2026
(Printed Name and Title of Authorized Representative) (Date)

304-776-3355
(Phone Number) (Fax Number)

bruce@mcclanahanconstruction.com
(Email Address)

GENERAL CONSTRUCTION SPECIFICATIONS

1. **PURPOSE AND SCOPE:** The West Virginia Purchasing Division is soliciting bids on behalf of the West Virginia Adjutant General's Office, to establish a contract for Taxiway Repairs at the Wheeling AASF#2 (Army Aviation Support Facility) in Wheeling, WV. The Thrasher Group, Inc. is serving as the Engineer on this project.

   The award, execution and completion of this project is contingent upon receipt of funding; therefore, vendors are requested to honor the pricing submitted on their bids for 90 days from the date bids are opened on this project.

   Please follow the guidelines below regarding the meeting.

   - Site visits will take place the day of the Pre-Bid meeting in small groups as directed by the Agency Project Manager, vendors should plan on the possibility of being onsite for several hours, depending on the number of contractors who attend.
   - The site visit is NOT an opportunity to ask or submit technical questions about the project. No verbal representations provided at a site visit are binding in any manner. Interested bidders should submit all technical questions per the instructions in the CRFQ.

2. **DEFINITIONS:** The terms listed below shall have the meanings assigned to them below. Additional definitions can be found in section 2 of the General Terms and Conditions and in the Specification's Manual as defined below.

   2.1 "Construction Services" means taxiway repairs at the Wheeling AASF#2 (Army Aviation Support Facility) in Wheeling, WV, as more fully described in these specifications and the Specifications/Project Manual.

   2.2 "Pricing Page" means the pages contained in wvOASIS, attached hereto, or included in the Specifications/Project Manual upon which Vendor should list its proposed price for the Construction Services.

   2.3 "Solicitation" means the official notice of an opportunity to supply the State with Construction Services that is published by the Purchasing Division.

   2.4 "Specifications/Project Manual" means the American Institute of Architect forms, specifications, plans, drawings, and related documents developed by the architect, engineer, or Agency that provide detailed instructions on how the Construction Services are to be performed along with any American Institute of Architects documents ("AIA documents") attached thereto.

3. **ORDER OF PRECEDENCE:** This General Construction Specifications document will have priority over, and supersede, anything contained in the Specifications/Project Manual.

4. **QUALIFICATIONS:** Vendor, or Vendor's staff if requirements are inherently limited to individuals rather than corporate entities, shall have the following minimum qualifications:

   4.1. Experience: Vendor, or Vendor's supervisory staff assigned to this project, must have successfully completed at least 5 (five) projects that involved work similar to that described in the Specifications/Project Manual. Compliance with this experience requirement will be determined prior to contract award by the State through references provided by the Vendor upon request, through knowledge or documentation of the Vendor's past projects, through confirmation of experience requirements from the architect assisting the State in this project, or some other method that the State determines to be acceptable. Vendor must provide any documentation requested by the State to assist in confirmation of compliance with this provision. References, documentation, or other information to confirm compliance with this experience requirement may be requested after bid opening and prior to contract award.

5. **CONTRACT AWARD:** The Contract is intended to provide Agency with a purchase price for the Construction Services. The Contract will be awarded to the lowest qualified responsible bidder meeting the required specifications. If the Pricing Pages contain alternates/add-ons, the Contract will be awarded based on the grand total of the base bid and any alternates/add-ons selected.

6. **SELECTION OF ALTERNATES:** Pursuant to W. Va. Code § 5-22-1(f), any solicitation of bids shall include no more than five alternates. Alternates, if accepted, shall be accepted in the order in which they are listed on the bid form. Any unaccepted alternate contained within a bid shall expire 90 days after the date of the opening of bids for review. Determination of the lowest qualified responsible bidder shall be based on the sum of the base bid and any alternates accepted. Alternate selection will be identified in the Purchase Order. **This project contains Two (2) alternates.**

7. **PROGRESS PAYMENTS:** The Vendor will be paid in the form of periodic progress payments for work completed. Payment requests along with documentation supporting the request will be submitted to and reviewed by the Architect. If approved, the Architect will communicate approval to the Owner and Owner will process payment. The Owner reserves the right to withhold liquidated damages from progress payments. Progress payments will be made no more than monthly.

Approval and payment of progress payments will be based on Contractor's submission of a payment allocation schedule which allocates the entire contract sum to payment milestones. Architect and Owner will review the payment allocation and may mandate changes that they believe are necessary.

8. **RETAINAGE:** Agency is entitled to withhold **10%** from each progress payment made as retainage. Agency will partially release retainage upon certification of substantial completion by the Architect in accordance with this Contract but will continue to retain amounts sufficient to cover activities needed to reach final completion.

9. **PERFORMANCE:** Vendor shall perform the Construction Services in accordance with this document and the Specifications/Project Manual.

10. **SUBSTANTIAL AND FINAL COMPLETION:** Vendor shall achieve substantial completion by a date to be determined based on the notice to proceed and final completion by a date to be determined based on the notice to proceed. Failure to meet the deadlines established herein, unless extended by change order authorizing additional time free of liquidated damages, will result in liquidated damages being applied.

11. **LIQUIDATED DAMAGES:** Contractor shall pay liquidated damages in the amount of $1,500.00 per day of delay, plus a one-time fixed cost of $1,250.00 for Staff Judge Advocate review for work not completed after contract completion date. This clause shall in no way be considered exclusive and shall not limit the State or Agency's right to pursue any other available remedy.

12. **PROJECT PLANS:** Copies of the project plans can be obtained by contacting the entity identified below.

    The Thrasher Group, Inc.
    600 White Oaks Blvd
    Bridgeport, WV 26330

    Copies of project plans can be examined at the following locations

    Kanawha Valley Builder's Association
    1627 Bigley Avenue
    Charleston, WV 25302
    (304) 342-7141 FAX: (304) 343-8014

    Contractor's Association of West Virginia
    2114 Kanawha Boulevard East
    Charleston, WV 25311
    (304) 342-1166 FAX: (304) 342-1074

Pennsylvania Builder's Exchange
1813 North Franklin Street
Pittsburgh, PA 15233
(412) 922-4200 FAX: (412) 928-9406

Construction Employer's Association of North Central West Virginia
2794 White Hall Boulevard
White Hall, WV 26554
(304) 367-1290 FAX: (304) 367-0126

McGraw-Hill Dodge Reports
Attn: Scan Department
3315 Central Avenue
Hot Springs, AR 71913-6138
(781) 430-2004

Reed Construction Data
30 Technology Parkway South, Suite 100
Norcross, GA 30092
(770) 417-4000 FAX: (800) 317-0870

13. SUBSTITUTIONS: Any substitution requests must be submitted in accordance with the official question and answer period described in the INSTRUCTIONS TO VENDORS SUBMITTING BIDS, Paragraph 4. Vendor Question Deadline.

14. FACILITIES ACCESS: Performance of Contract Services may require access cards and/or keys to gain entrance to Agency's facilities. In the event that access cards and/or keys are required:

14.1. Vendor must identify principal service personnel which will be issued access cards and/or keys to perform service.

14.2. Vendor will be responsible for controlling cards and keys and will pay replacement fee, if the cards or keys become lost or stolen.

14.3. Vendor shall notify Agency immediately of any lost, stolen, or missing card or key.

14.4. Anyone performing under this Contract will be subject to Agency's security protocol and procedures.

14.5. Vendor shall inform all staff of Agency's security protocol and procedures.

15. MISCELLANEOUS:

15.1. Contract Manager: During its performance of this Contract, Vendor must designate and maintain a primary contract manager responsible for overseeing Vendor's responsibilities under this Contract. The Contract manager must be available during normal business hours to address any customer service or other issues related to this Contract. Vendor should list its Contract manager and his or her contact information below.

Contract Manager: Bruce D. McClanahan

Telephone Number: 304-776-3355

Fax Number: N/A

Email Address: bruce@mcclanahanconstruction.com

15.2. Owner's Representative: Owner's representative for notice purposes is

Name: Jim Skaggs

Telephone Number: 304-719-8745

Fax Number: N/A

Email Address: robert.a.skaggs14.nfg@army.mil

16. Initial Decision Maker: The Thrasher Group, Inc., the Architect, shall serve as the Initial Decision Maker in matters relating to this contract.

WV-73
Approved / April 30, 2020

State of West Virginia
DRUG FREE WORKPLACE CONFORMANCE AFFIDAVIT
***West Virginia Code* §21-1D-5**

I, Bruce D. McClanahan, after being first duly sworn, depose and state as follows:

1. I am an employee of McClanahan Construction Company, LLC; and,
(Company Name)

2. I do hereby attest that McClanahan Construction Company, LLC
(Company Name)

maintains a written plan for a drug-free workplace policy and that such plan and policy are in compliance with ***West Virginia Code*** §21-1D.

The above statements are sworn to under the penalty of perjury.

Printed Name: Bruce D. McClanahan

Signature: Bruce D. McClanahan

Title: Managing Member

Company Name: McClanahan Construction Company, LLC

Date: August 20, 2026

STATE OF WEST VIRGINIA,

COUNTY OF Kanawha, TO-WIT:

Taken, subscribed and sworn to before me this 20th day of August, 2026.

By Commission expires September 2, 2030

(Seal)

OFFICIAL SEAL
NOTARY PUBLIC
STATE OF WEST VIRGINIA
Syvannah L Patterson
300 Summers Street, Suite 150
Charleston WV 25301
My Commission Expires September 2, 2030

Syvannah L. Patterson
(Notary Public)

Rev. July 7, 2017

State of West Virginia

PURCHASING DIVISION

Construction Bid Submission Review Form

This list has been provided for informational purposes only and is not to be construed as a complete list of request for quotation or bidding requirements for any individual construction project. This list does not and cannot include every item, mistake or oversight that could cause a contractor's bid to be disqualified. Rather, this list is intended to draw attention to some of the most common problems that the Purchasing Division encounters in the bidding process for construction projects. All potential bidders must read the request for quotation, all additional documents, and all instructions relating thereto ("Bid Documents") in their entirety to identify the actual request for quotation and bidding requirements. Failure to read the Bid Documents in their entirety and comply with the stated requirements contained therein may result in bid disqualification.

Errors That Shall Be Reason for Immediate Bid Disqualification

1. Failure to attend a mandatory pre-bid meeting
2. Failure to sign the bid
3. Failure to supply a valid bid bond or other surety approved by the state of West Virginia
4. Failure to meet any mandatory requirement of the solicitation
5. Failure to acknowledge receipt of Addenda (only if stipulated as mandatory)
6. Failure to submit bid prior to the bid opening date and time
7. Federal debarment
8. State of West Virginia debarment or suspension

Errors that May Be Reason for Bid Disqualification Before Contract Award

1. Debt to the state or political subdivision (must be cured prior to award)
2. Workers' Compensation or Unemployment Compensation delinquency (must be cured prior to award)
3. Not registered as a vendor with the state of West Virginia (must be cured prior to award)
4. Failure to obtain required bonds and/or insurance
5. Failure to provide the sub-contractor listing within one business day of bid opening or one business day of the request to do so by the Purchasing Division.
6. Failure to supply West Virginia contractor's license number with bid or within one day of Purchasing Division request to do so.
7. Failure to supply a signed drug-free workplace affidavit with bid or within one day of Purchasing Division request to do so.
8. Failure to use the provided solicitation form (only if stipulated as mandatory).
9. Failure to complete the Disclosure of Interested Parties to Contracts form (if contract has an actual or estimated value of $1 million or more; does not apply to publicly traded companies listed on national or internal stock exchange)

Agency Adjutant General's Office
REQ.P.O# CRFQ 0603 ADJ2700000007

BID BOND

KNOW ALL MEN BY THESE PRESENTS, That we, the undersigned, McClanahan Construction Company, LLC of Poca, WV, as Principal, and Fidelity and Deposit Company of Maryland of Schaumburg, IL, a corporation organized and existing under the laws of the State of IL with its principal office in the City of Schaumburg, as Surety, are held and firmly bound unto the State of West Virginia, as Obligee, in the penal sum of Five Percent of Amount Bid ($ 5%) for the payment of which, well and truly to be made, we jointly and severally bind ourselves, our heirs, administrators, executors, successors and assigns.

The Condition of the above obligation is such that whereas the Principal has submitted to the Purchasing Section of the Department of Administration a certain bid or proposal, attached hereto and made a part hereof, to enter into a contract in writing for Wheeling AASF#2 Taxiway Repairs (Construction) CRFQ 0603 ADJ2700000007- According to Plans and Specifications

NOW THEREFORE,

(a) If said bid shall be rejected, or

(b) If said bid shall be accepted and the Principal shall enter into a contract in accordance with the bid or proposal attached hereto and shall furnish any other bonds and insurance required by the bid or proposal, and shall in all other respects perform the agreement created by the acceptance of said bid, then this obligation shall be null and void, otherwise this obligation shall remain in full force and effect. It is expressly understood and agreed that the liability of the Surety for any and all claims hereunder shall, in no event, exceed the penal amount of this obligation as herein stated.

The Surety, for the value received, hereby stipulates and agrees that the obligations of said Surety and its bond shall be in no way impaired or affected by any extension of the time within which the Obligee may accept such bid, and said Surety does hereby waive notice of any such extension.

WITNESS, the following signatures and seals of Principal and Surety, executed and sealed by a proper officer of Principal and Surety, or by Principal individually if Principal is an individual, this 20th day of August, 2026.

Principal Seal

McClanahan Construction Company, LLC
(Name of Principal)

By Bruce D. McClanahan
(Must be President, Vice President, or Duly Authorized Agent)

Bruce D. McClanahan Managing Member
(Title)

Surety Seal

Fidelity and Deposit Company of Maryland
(Name of Surety)

By: Patricia A. Moye
Patricia A. Moye, WV Resident Agent Attorney-in-Fact

IMPORTANT – Surety executing bonds must be licensed in West Virginia to transact surety insurance, must affix its seal, and must attach a power of attorney with its seal affixed.

ZURICH AMERICAN INSURANCE COMPANY
COLONIAL AMERICAN CASUALTY AND SURETY COMPANY
FIDELITY AND DEPOSIT COMPANY OF MARYLAND
POWER OF ATTORNEY

KNOW ALL MEN BY THESE PRESENTS: That the ZURICH AMERICAN INSURANCE COMPANY, a corporation of the State of New York, the COLONIAL AMERICAN CASUALTY AND SURETY COMPANY, a corporation of the State of Illinois, and the FIDELITY AND DEPOSIT COMPANY OF MARYLAND a corporation of the State of Illinois (herein collectively called the "Companies"), by Christopher Nolan, Vice President, in pursuance of authority granted by Article V, Section 8, of the By-Laws of said Companies, which are set forth on the reverse side hereof and are hereby certified to be in full force and effect on the date hereof, do hereby nominate, constitute, and appoint **Gregory T. GORDON, Jeremy B. STANLEY, Patricia A. MOYE, Terri L. DODRILL, Syvannah L. PATTERSON of Charleston, West Virginia,** its true and lawful agent and Attorney-in-Fact, to make, execute, seal and deliver, for, and on its behalf as surety, and as its act and deed: any and all bonds and undertakings, and the execution of such bonds or undertakings in pursuance of these presents, shall be as binding upon said Companies, as fully and amply, to all intents and purposes, as if they had been duly executed and acknowledged by the regularly elected officers of the ZURICH AMERICAN INSURANCE COMPANY at its office in New York, New York., the regularly elected officers of the COLONIAL AMERICAN CASUALTY AND SURETY COMPANY at its office in Owings Mills, Maryland., and the regularly elected officers of the FIDELITY AND DEPOSIT COMPANY OF MARYLAND at its office in Owings Mills, Maryland., in their own proper persons.

The said Vice President does hereby certify that the extract set forth on the reverse side hereof is a true copy of Article V, Section 8, of the By-Laws of said Companies, and is now in force.

IN WITNESS WHEREOF, the said Vice-President has hereunto subscribed his/her names and affixed the Corporate Seals of the said **ZURICH AMERICAN INSURANCE COMPANY, COLONIAL AMERICAN CASUALTY AND SURETY COMPANY, and FIDELITY AND DEPOSIT COMPANY OF MARYLAND**, this 05th day of September, A.D. 2025.

ATTEST:
ZURICH AMERICAN INSURANCE COMPANY
COLONIAL AMERICAN CASUALTY AND SURETY COMPANY
FIDELITY AND DEPOSIT COMPANY OF MARYLAND

By: Christopher Nolan
Vice President

By: Dawn E. Brown
Secretary

State of Maryland
County of Baltimore

On this 05th day of September, A.D. 2025, before the subscriber, a Notary Public of the State of Maryland, duly commissioned and qualified, **Christopher Nolan, Vice President and Dawn E. Brown, Secretary** of the Companies, to me personally known to be the individuals and officers described in and who executed the preceding instrument, and acknowledged the execution of same, and being by me duly sworn, deposeth and saith, that he/she is the said officer of the Company aforesaid, and that the seals affixed to the preceding instrument are the Corporate Seals of said Companies, and that the said Corporate Seals and the signature as such officer were duly affixed and subscribed to the said instrument by the authority and direction of the said Corporations.

IN TESTIMONY WHEREOF, I have hereunto set my hand and affixed my Official Seal the day and year first above written.

Genevieve M. Maison
Notary Public
My Commission Expire January 27, 2029

Authenticity of this bond can be confirmed at bondvalidator.zurichna.com or 410-559-8790

EXTRACT FROM BY-LAWS OF THE COMPANIES

"Article V, Section 8, Attorneys-in-Fact. The Chief Executive Officer, the President, or any Executive Vice President or Vice President may, by written instrument under the attested corporate seal, appoint attorneys-in-fact with authority to execute bonds, policies, recognizances, stipulations, undertakings, or other like instruments on behalf of the Company, and may authorize any officer or any such attorney-in-fact to affix the corporate seal thereto; and may with or without cause modify of revoke any such appointment or authority at any time."

CERTIFICATE

I, the undersigned, Vice President of the ZURICH AMERICAN INSURANCE COMPANY, the COLONIAL AMERICAN CASUALTY AND SURETY COMPANY, and the FIDELITY AND DEPOSIT COMPANY OF MARYLAND, do hereby certify that the foregoing Power of Attorney is still in full force and effect on the date of this certificate; and I do further certify that Article V, Section 8, of the By-Laws of the Companies is still in force.

This Power of Attorney and Certificate may be signed by facsimile under and by authority of the following resolution of the Board of Directors of the ZURICH AMERICAN INSURANCE COMPANY at a meeting duly called and held on the 15th day of December 1998.

RESOLVED: "That the signature of the President or a Vice President and the attesting signature of a Secretary or an Assistant Secretary and the Seal of the Company may be affixed by facsimile on any Power of Attorney...Any such Power or any certificate thereof bearing such facsimile signature and seal shall be valid and binding on the Company."

This Power of Attorney and Certificate may be signed by facsimile under and by authority of the following resolution of the Board of Directors of the COLONIAL AMERICAN CASUALTY AND SURETY COMPANY at a meeting duly called and held on the 5th day of May, 1994, and the following resolution of the Board of Directors of the FIDELITY AND DEPOSIT COMPANY OF MARYLAND at a meeting duly called and held on the 10th day of May, 1990.

RESOLVED: "That the facsimile or mechanically reproduced seal of the company and facsimile or mechanically reproduced signature of any Vice-President, Secretary, or Assistant Secretary of the Company, whether made heretofore or hereafter, wherever appearing upon a certified copy of any power of attorney issued by the Company, shall be valid and binding upon the Company with the same force and effect as though manually affixed.

IN TESTIMONY WHEREOF, I have hereunto subscribed my name and affixed the corporate seals of the said Companies, this 20th day of August, 2026

Mary Jean Pethick
Vice President

TO REPORT A CLAIM WITH REGARD TO A SURETY BOND, PLEASE SUBMIT A COMPLETE DESCRIPTION OF THE CLAIM INCLUDING THE PRINCIPAL ON THE BOND, THE BOND NUMBER, AND YOUR CONTACT INFORMATION TO:

Zurich Surety Claims
1299 Zurich Way
Schaumburg, IL 60196-1056
reportsfclaims@zurichna.com
800-626-4577

Authenticity of this bond can be confirmed at bondvalidator.zurichna.com or 410-559-8790

CONTRACTOR LICENSE

AUTHORIZED BY THE

West Virginia Contractor Licensing Board

NUMBER: **WV004165**

CLASSIFICATION:

GENERAL BUILDING
RESIDENTIAL
SPECIALTY

MCCLANAHAN CONSTRUCTION COMPANY LLC
744 POCA RIVER ROAD N
POCA, WV 25159-9042

DATE ISSUED	EXPIRATION DATE
SEPTEMBER 11, 2025	**SEPTEMBER 11, 2026**

Authorized Signature

Chair, West Virginia Contractor Licensing Board

WEST VIRGINIA CONTRACTOR LICENSING BOARD

A copy of this license must be readily available for inspection by the Board on every job site where contracting work is being performed. This license number must appear in all advertisements, on all bid submissions, and on all fully executed and binding contracts. This license is non-transferable. This license is being issued under the provisions of West Virginia Code, Chapter 30, Article 42.

Department of Administration Purchasing Division 2019 Washington Street East Post Office Box 50130 Charleston, WV 25305-0130	**State of West Virginia** **Centralized Request for Quote** **Construction**

Proc Folder: 2026954			**Reason for Modification:**
Doc Description: Wheeling AASF#2 Taxiway Repairs (Construction)			Addendum No. 1
Proc Type: Central Purchase Order			
Date Issued	**Solicitation Closes**	**Solicitation No**	**Version**
2026-08-12	2026-08-20 13:30	CRFQ 0603 ADJ2700000007	2

BID RECEIVING LOCATION

BID CLERK
DEPARTMENT OF ADMINISTRATION
PURCHASING DIVISION
2019 WASHINGTON ST E
CHARLESTON WV 25305
US

VENDOR

Vendor Customer Code: 000000206945

Vendor Name : McClanahan Construction Company, LLC

Address : 744 Poca River Rd N, Poca, WV 25159

Street : 744 Poca River Rd N

City : Poca

State : WV **Country :** United States **Zip :** 25159

Principal Contact : Bruce D. McClanahan

Vendor Contact Phone: 304-776-3355 **Extension:**

FOR INFORMATION CONTACT THE BUYER
David H Pauline
304-558-0067
david.h.pauline@wv.gov

Vendor Signature X Bruce D. McClanahan **FEIN#** 55-0698258 **DATE** August 20, 2026

All offers subject to all terms and conditions contained in this solicitation

ADDITIONAL INFORMATION
Addendum No. 1 Provide copies of the Pre-Bid meeting sign-in sheets (see attached) Provide responses to vendor questions regarding this solicitation (see attached) Provide a revised/updated Exhibit A- Bid Form in response to a vendor question (see attached) Provide two (2) new detail drawings in response to vendor questions (see attached) To move the Bid opening date and time to August 20, 2026, at 1:30 pm EST. No other changes.

INVOICE TO		SHIP TO	
ADJUTANT GENERALS OFFICE		ARMY AVIATION SUPPORT FACILITY 2	
1707 COONSKIN DR		538 GIRTYS POINT RD	
CHARLESTON	WV	WHEELING	WV
US		US	

Line	Comm Ln Desc	Qty	Unit Issue	Unit Price	Total Price
1	Wheeling AASF#2 Taxiway Repairs (Construction) BASE BID	1	Base Bid	$2,090,000.00	$2,090,000.00

Comm Code	Manufacturer	Specification	Model #
72000000			

Extended Description:

BASE BID-Provide labor, materials tools, supplies and equipment to provide taxiway repairs per the attached plans and specifications

INVOICE TO	SHIP TO
ADJUTANT GENERALS OFFICE 1707 COONSKIN DR CHARLESTON WV US	ARMY AVIATION SUPPORT FACILITY 2 538 GIRTYS POINT RD WHEELING WV US

Line	Comm Ln Desc	Qty	Unit Issue	Unit Price	Total Price
2	ALTERNATE No.1- Full Slab Replacement in Area #1	1	Alternate No. 1	$639,710.00	$639,710.00

Comm Code	Manufacturer	Specification	Model #
72000000			

Extended Description:
ALTERNATE No. 1-Provide labor, materials tools, supplies and equipment to provide full slab replacement taxiway repairs in Area #1 per the attached plans and specifications.

INVOICE TO	SHIP TO
ADJUTANT GENERALS OFFICE 1707 COONSKIN DR CHARLESTON WV US	ARMY AVIATION SUPPORT FACILITY 2 538 GIRTYS POINT RD WHEELING WV US

Line	Comm Ln Desc	Qty	Unit Issue	Unit Price	Total Price
3	ALTERNATE No.2- Full Slab Replacement in Area #2	1	Alternate No. 2	$636,310.00	$636,310.00

Comm Code	Manufacturer	Specification	Model #
72000000			

Extended Description:
ALTERNATE No. 2-Provide labor, materials tools, supplies and equipment to provide full slab replacement taxiway repairs in Area #2 per the attached plans and specifications.

SCHEDULE OF EVENTS

Line	Event	Event Date
1	Mandatory Prebid Meeting At 11:00 am EST.	2026-08-04
2	Vendor Technical Questions Due By 11:00 am EST.	2026-08-10

SOLICITATION NUMBER: CRFQ ADJ2700000007
Addendum Number: 1

The purpose of this addendum is to modify the solicitation identified as ("ADJ2700000007") to reflect the change(s) identified and described below.

Applicable Addendum Category:

☒ Modify bid opening date and time.

☒ Modify specifications of product or service being sought.

☒ Attachment of vendor questions and responses.

☒ Attachment of pre-bid sign-in sheet.

☐ Correction of error.

☒ Other.

Description of Modification to Solicitation:

1. Provide copies of the Pre-Bid meeting sign-in sheets (see attached)
2. Provide responses to vendor questions regarding this solicitation (see attached)
3. Provide a revised/updated Exhibit A- Bid Form in response to a vendor question (see attached)
4. Provide two (2) new detail drawings in response to vendor questions (see attached) **Please attach these PDFs directly to the header in Oasis**
5. Please move the Bid opening date to August 20th at 1:30pm

No other changes.

Additional Documentation: Documentation related to this Addendum (if any) has been included herewith as Attachment A and is specifically incorporated herein by reference.

Terms and Conditions:

1. All provisions of the Solicitation and other addenda not modified herein shall remain in full force and effect.

2. Vendor should acknowledge receipt of all addenda issued for this Solicitation by completing an Addendum Acknowledgment, a copy of which is included herewith. Failure to acknowledge addenda may result in bid disqualification. The addendum acknowledgement should be submitted with the bid to expedite document processing.

WEST VIRGINIA
PURCHASING DIVISION

Pre-Bid Sign-In Sheet (WV-32)

Solicitation No.: CRFQ-ADJ2700000007
Date of Pre-Bid Meeting: 8/4/26
Location of Pre-Bid Meeting: AASF#2-Wheeling, WV
☑ Mandatory ☐ Not Mandatory

PLEASE NOTE:
- Vendors must sign in on this sheet to verify attendance at the pre-bid conference meeting.
- Failure to legibly sign in may be grounds for declaring a vendor ineligible to bid.
- For further verification, please provide a business card, if possible.

One Vendor Per Representative: No one individual is permitted to represent more than one vendor at the pre-bid conference. Any individual that does attempt to represent two or more vendors will be required to select one vendor to which the individual's attendance will be attributed. The vendors not selected will be deemed to have not attended the pre-bid meeting unless another individual attended on their behalf.

Firm Representative:	Representative Name (Printed)	Firm Address:	Telephone:	Email Address:
TEMPO CONSTRUCTION	MARY NEENAN	1716 PENNSYLVANIA CHAS. WV 25302	304-741-5598	mary.neenan@tempoww.com
Golden triangle Const	Craig Whyte	8555 Old Steubenville Pike Imperial PA 15126	724 828-2800	craig@gtcpgh.com
Mid Atlantic Maintenance	Austin Edman	Po Box 3405 Parkersburg, WV 26103	304-483-4360	aedman@midatlanticusa.com
McLanahan construction.com	Robert Rose	7411 Poca Riverside Poca WV. 25159	304-776-3755	bruce@mclanahanconstruction.com
WV MA	Darin Cecil	535 Guty St Rd. Wheeling WV	740-472-4486	darin.cecil.nfg@gmail.com
CFMO	Craig Welch		304-881-2369	
CFMO	Jim Skaggs		304-719-8745	

WEST VIRGINIA
PURCHASING DIVISION

Pre-Bid Sign-In Sheet (WV-32)

Solicitation No.: CRFQ-ADJ2700000007
Date of Pre-Bid Meeting: 8/4/26
Location of Pre-Bid Meeting: AASF#2-Wheeling, WV
☑ Mandatory ☐ Not Mandatory

PLEASE NOTE:

- Vendors must sign in on this sheet to verify attendance at the pre-bid conference meeting.
- Failure to legibly sign in may be grounds for declaring a vendor ineligible to bid.
- For further verification, please provide a business card, if possible.

One Vendor Per Representative: No one individual is permitted to represent more than one vendor at the pre-bid conference. Any individual that does attempt to represent two or more vendors will be required to select one vendor to which the individual's attendance will be attributed. The vendors not selected will be deemed to have not attended the pre-bid meeting unless another individual attended on their behalf.

Firm Representative:	Representative Name (Printed)	Firm Address:	Telephone:	Email Address:
~~[illegible]~~				
Independence excavating	Olivia Williams			owilliams@indexc.com
TRITON CONST	MIK GEDMAN			Michael.Gedman@wv.com
			Michael.Gedman@wv.com	
Thrasher	nicole Price			nprice@thetnravergroup.co

DEPARTMENT OF THE ARMY
JOINT FORCES HEADQUARTERS WEST VIRGINIA
1707 COONSKIN DRIVE
CHARLESTON, WEST VIRGINIA 25311-1026

August 12, 2026

ADDENDUM NO. 1- CRFQ-ADJ2700000007

RE: Wheeling AASF#2 Taxiway Repairs (Construction)
West Virginia Army National Guard
Wheeling Army Aviation Support Facility #2, Wheeling, WV

TO: Prospective Bidders

FROM: West Virginia Army National Guard

NOTE: This Addendum forms a part of the Contract Documents and modifies the original Bidding Documents.

PART 1 – INFORMATION FOR BIDDERS

Bid opening date is moved to August 20, 2026 @ 1:30 pm EST

PART 2 – BIDDERS' QUESTIONS AND RESPONSES

1. Question: There are multiple layers of existing paint on the apron and some areas are chipping/peeling off. General cleaning of the existing markings before remarking will not remove these areas; paint eradication or removal will be required to achieve proper adhesion. Can an Item/quantity be added for marking removal to account for these areas or will the bidder need to account for what they think will need removed in their bid?

Response: The cost of surface preparation is included in the lump sum price for pavement markings. This cost should include the removal of loose existing markings and the surface cleaned of all residue or debris.

2. Question: Due to weather concerns for this type of work, can the project be started in the Spring of 2027?

Response: Contract will be executed in September however work will not begin until award of Notice to Proceed which is anticipated for Spring 2027.

3. Question: Please clarify the daily liquidated damage dollar amount.

Response: Contractor shall pay liquidated damages in the amount of $1,500.00 per day of delay, plus a one-time fixed cost of $1,250.00 for Staff Judge Advocate review for work not completed after contract completion date. This clause shall in no way be considered exclusive and shall not limit the State or Agency's right to pursue any other available remedy.

4. Question: On the Bid Schedule, Alternate No. 2, Item No. 21 – The description states P-501 Cement Concrete Pavement. On Drawing C1.00, under Quantities, the description lists P-209 Crushed Aggregate Base Course. Will the Bid Schedule be amended for this item?

Response: Yes. See attached bid schedule.

5. Question: On Sheet C1.00, under General Notes, Item No. 13, states **ALL** grounding rods will be replaced. The Base Bid form only accounts for (6) grounding rods to be replaced and Alternate No. 2 has (1). Please clarify.

Response: C1.00 Note 13 shall be amended to read as follows: "Where concrete is to be replaced and a grounding rod is present, the existing grounding rod shall be removed and a new grounding rod installed.

6. Question: Please clarify which Wage Rate is to be used for this project. Heavy or Highway.

Response: Highway.

7. Question: In P-501 Cement Concrete Pavement, Section 501-3.3, references a 5000 PSI mix and Drawing C4.02, references a 4000 PSI. Please clarify.

Response: 4000 PSI.

8. Question: Does the Buy America Act apply to this project?

Response: Yes.

9. Question: There is a major supplier wanting to know if the Army Corp of Engineers are involved in this project. (ex. Submittal Review, Testing, Oversite, etc.)

Response: ACOE is not involved with this project.

10. Question: In the Bid Schedule - Base Bid Item No. 8. Could you please confirm that the 4,000 SY is the correct amount?

Response: 4,000 SY is correct.

11. Question: Plan notes for the full depth repair procedures call for concrete to be removed with jackhammers less than 30 pounds to prevent damage to the pavement remaining. Removing 4,000+ SY of full depth concrete with 30-pound jackhammers is unreasonable. Will other means and methods of concrete removal be allowed if the concrete can be removed without damaging the pavement remaining?

Response: The specified jackhammer limitation is intended to protect the adjacent concrete slabs that are to remain in place. Alternative means and methods of concrete removal will be permitted, provided the pavement to remain is not damaged. Any damage to slabs designated to remain in place shall be repaired at the Contractor's expense.

12. Question: Can you please confirm the coating requirement for the dowels and #4 reinforcing steel in the concrete.

Response: Dowel bars should be epoxy coated that meets the requirements of ASTM A1078 Type 1. The #4 reinforced steel will not be epoxy coated.

13. Question: Access to the taxiway is not shown on the plans - can you please confirm the contractor's access points to and from the taxiway?

Response: A phasing plan has been included that identified access from the site.

14. Question: Will the contractor be required to provide a gate guard?

Response: No.

15. Question: What are the Airport and Army National Guard training and badging requirements for onsite personnel?

Response: None.

16. Question: Is it anticipated that contractor supplied escorts will be required? Once access to the taxiway is confirmed, is it safe to assume that escorts will not be required if the taxiway can be accessed without crossing the runway?

Response: No escorts will be required.

17. Question: Will the contractor be allowed a secure staging area adjacent to the taxiway within AOA?

Response: A staging area has been identified on the phasing plan.

18. Question: The plans require the Contractor to coordinate the concrete replacement schedule with the Army National Guard's operations schedule to maintain access to and from the runway throughout construction. However, the National Guard's anticipated operations and required taxiway access have not been provided. Therefore, bidders cannot determine the allowable size, location, or duration of taxiway closures or establish an appropriate construction sequence.

    Please delineate the allowable work areas and closure limits on the plans or provide minimum bid assumptions regarding the maximum area that may be closed at one time, required access routes, phasing, and allowable closure durations. The Contractor can then coordinate work within those defined areas with the Army National Guard.
    Without this direction, bidders may make materially different assumptions regarding production rates, phasing, and project duration. Please clarify the Owner's expectations so that all contractors can prepare bids on a consistent basis.

Response: A phasing plan has been provided.

19. Question: The Additive Alternate bid schedule has a quantity of P-501 in both line items 21 and 22 for a quantity of 1,605 SY. This seems to be a typo. Plan sheet C1.00 shows line item 21 in additive bid alternate #2 as P-209 crushed aggregate base course.

Response: Please see response for Question 4.

20. Question: Is there a 2-to-3-acre area on airport property where the contractor could set up a mobile central mix concrete batch plant for the project?

Response: No.

21. Question: Would the owner consider adding an alternate bid item for P-219 Recycled Concrete Aggregate Base Course In lieu of P-209?

    a. If yes, could the contractor utilize an area on airport property to crush the concrete being removed and re-use it as P-219?

Response: No P-219 will not be allowed.

22. Question: What is the anticipated construction schedule for the project?

Response: Please see response for Question 2.

23. Question: Can a geotechnical report be provided?

Response: There is no Geotech for this project.

24. Question: How thick is the existing concrete that is being removed?

Response: The existing concrete ranges from 6-8” thick.

25. Question: The plans refer to a staging area but there is no area shown. Please provide location where the staging area will be as well as the area where excess material will be stockpiled onsite.

Response: Please see response to Question 17. Excess material location has been identified on the phasing sheet C2.06 included in this addendum.

26. Question: Please confirm any topsoil that is stripped prior to regarding the prescribed areas can be re-used as final topsoil.

Response: Yes, topsoil stripped can be reused prior to reseeding and mulching.

27. Question: Note 7 on plan sheet C4.03 says to use lightweight equipment i.e. jackhammers less than 30 lbs. to remove concrete. Please confirm the contractor can utilize heavy equipment to remove the concrete. I.E. Excavators with hammer attachments along with smaller equipment to assist with breaking and loading of concrete to be removed.

Response: See response to Question 11.

28. Question: Is the excavation of the existing material underneath the concrete being replaced incidental to the P-209 item? Please confirm this material can be stockpiled onsite.

    Response: No, a new bid item has been created. Material can be stockpiled onsite.

29. Question: P-501 Can the maximum aggregate size be raised to 1.5” to allow for a #4 and #67 aggregate combination to be utilized. This will allow for the contractor to more easily achieve the CF/WF requirements set forth in the specifications.

    Response: Yes 1.5” max aggregate size will be allowed.

30. Question: P-501 Type I/II cement that is being specified is no longer readily available due to the industry change to Type IL. Will Type IL be acceptable?

    Response: Yes, Type IL cement will be acceptable.

31. Due to the restrictive nature of the P-501 specification, it may be difficult to locate a local supplier who can provide a P-501 mix design. With this being the case, would the Engineer allow and extended concrete transport time of 120 minutes in a mixer truck if a retarder is utilized during production and part of the approved P-501 mixture?

    Response: No.

32. Question: On the bid sheet, Item #21 is listed as P-501 Cement Concrete Pavement, but we believe should be P-209 Crushed Aggregate Base Course. Please review.

    Response: Please see response to Question 4.

33. Question: Bid Item #24 description is for grounding points. We do not see a detail for the grounding points unless this is supposed to be a Ground Rod. Please clarify.

    Response: Yes, this is intended to be the grounding rods. Detail is on sheet C4.01.

34. Question: How is the excavation for P-209 paid for? Is it incidental?

    Response: Please see response to Question 28.

35. Question: Is the P605 Joint sealant item to be paid in the area of the new concrete? Will existing concrete seals that remain get sealed under this item?

    Response: The P-605 joint sealant item includes existing joints of concrete slabs not being replaced that are identified on the drawing as well as the new concrete joints.

36. Question: Can you please clarify the schedule. The contract duration is 270 calendar days. Prior to starting it will take at least 3 months from NTP to perform all of the testing for the concrete mix design, which would put the start of physical work during the winter. Will there be a winter shutdown where the contract duration will be paused thru the winter and then start in the Spring? Please clarify.

    Response: Please see response to Question 2.

37. Question: Can a conceptual plan or narrative be provided for how the traffic phasing was anticipated. Note 11 on sheet C1.00 states to coordinate with Operations. This could potentially have a major impact on schedule duration and cost. Will nights and weekends be required?

    Response: Please see response to Question 13. Nighttime/weekend work is not required.

38. Question: Please clarify if there will be any laydown area provided onsite.

    Response: Please see response to Question 17.

39. Question: For the Regrading of edges, will seeding be required? How will this be paid?

    Response: Yes a bid item has been included for seeding and mulching.

40. Question: Will work be permitted at night? With temperature restrictions on concrete pavement it may become necessary to pour off hours to maintain specifications. Also green cutting of concrete joints typically occurs at least 10 hours after placement of the concrete, so during placements work will be occurring for most of a 24 hour period.

    Response: See response to Question 37.

41. Question: Are there any B&O Taxes?

    Response: No.

42. Question: On both details on sheet C4.03 note #4 provides guidance if dowels and tie bars are to remain and how that work will be performed. Please clarify if there are any areas that the existing dowels and tie bars are to remain.

    Response: There are two partial slabs on sheet C2.05 that apply to the partial slab replacement detail.

43. Question: P-501. Can welded wire mesh be used in lieu of rebar if the cross-sectional area is equivalent.

    Response: Yes.

44. Question: Sheet C4.02 shows sawcutting beyond the limits of the existing joint, but then placing dowels at the existing joint location and not into the remaining existing concrete which is not typically done. The detail on Sheet C4.03 is correct in showing the dowel going into the existing concrete. Sawcutting patches beyond the limits of the existing joints will cause long term issues with cracking/joint failure since the existing and new joints will not line up. Typically the patch is sawcut and removed at the existing joint. Attached are some typicals from another FAA airport project (please note dowel length/dimensions/spacing/etc are different since different thickness of pavement). Please review.

    Response: The contractor is to saw cut beyond the limits of the existing joints. The dowel bars will then be placed in the existing concrete as shown on C4.03.

45. The details on sheet C4.03 show joint filler non-absorbent material to be placed to form the joint sealant reservoir. Typically the joint would be widened by a sawcut and then sealed. Attached is a typical detail for how this joint is widened and sealed. Please consider changing this or allowing both options.

    Response: Both options are allowed.

46. Question: Please clarify what the access will be like from the public road to the work area. Will gate guards be required? Is the contractor responsible for the gate guards. Will any crossings need flagged?

    Response: Please see response to Question 13. No gate guards are required, no crossings need to be flagged.

47. Question: Will there be any badging/ security requirements/special training for the project? Please clarify how long the process will take for employees and if there is any cost.

    Response: No.

48. Question: C4.02 (joint details) the joints detail shows a ½" x 2.5" saw cut filled with joint sealant. Is the intent for this reservoir to be filled entirely with joint sealant? Or should manufacturer's recommendations which include installing backer rod and maintain recommended sealant shape factor be followed in lieu of "filling the ½" x 2.5"" cut completely with sealant. Please advise.

    Response: Manufacturer recommendations will be allowable.

49. Question: Does the P-605 quantity for sealing include both the joint sealing for the new concrete repair areas AND the rehab of the existing joints? If not, please advise how each will be paid.

    Response: Please see response to Question 35.

50. Question: Do the mooring points located in areas of the proposed concrete need to be reconstructed?

    Response: Yes, if the mooring points are located in an area that is to be reconstructed they should be replaced. Cost should shall consist of the removal of existing aircraft tie-down anchors and the furnishing and installation of new aircraft tie-down anchors. Payment shall be made at the contract unit price per each aircraft tie-down removed and reconstructed. This price shall be full compensation for removing and disposing of the existing anchor and hardware; for furnishing and installing the new anchor and all incidental materials; and for all labor, equipment, tools, and incidentals necessary to complete the item as specified.

51. Question: There are several areas on the plans indicating proposed crack sealing. Is there a typical detail or specification for this work? Additionally, could you please clarify which bid item the crack sealing will be paid under?

    Response: Spec section P-605 Joint Sealant for Pavements is for this work. Detail sheet C4.02 has been modified to include details of the crack sealing of the joints. Work should be paid under item Revised Bid Form Item # 10 for base bid, 23 for Add Alt 1 and 29 for Add Alt 2.

END OF ADDENDUM

BID FORM FOR CONSTRUCTION CONTRACT

The terms used in this Bid with initial capital letters have the meanings stated in the Instructions to Bidders, the General Conditions, and the Supplementary Conditions.

ARTICLE 1—OWNER AND BIDDER

1.01 This bid is submitted to: State Purchasing

1.02 The undersigned Bidder proposes and agrees, if this Bid is accepted, to enter into an Agreement with Owner in the form included in the Bidding Documents to perform all Work as specified or indicated in the Bidding Documents for the prices and within the times indicated in this Bid and in accordance with the other terms and conditions of the Bidding Documents.

ARTICLE 2—ATTACHMENTS TO THIS BID

2.01 The following documents are submitted with and made a condition of this Bid:

A. Bid Opening Requirements

ARTICLE 3—BASIS OF BID—LUMP SUM BID AND UNIT PRICES

GENERAL

The Bidder shall take notice of and shall be responsible for any local or state taxes levied and applicable, and the cost for the same shall be included as part of the submitted Bid.

The total Bid cost stated includes a complete operating installation including furnishing and installation of any and all changes or additions in plans, piping, mechanical work, additional electrical work, accessories, controls, etc. necessary to accommodate alternative equipment systems or materials used in construction.

BID PROPOSAL

The Bidder agrees to perform all required Work described in the detailed Specifications and as shown on the Plans for the complete construction and placing in satisfactory operation the Wheeling AASF #2 Taxiway Repair. The Project "Sequence of Construction" has been detailed in the Drawings and Specification Division 1, Project Summary, Section 011000. The Bidder agrees to perform all the Work proposed for the total of the following Bid prices.

3.01 *Lump Sum Bids*

A. Bidder will complete the Work in accordance with the Contract Documents for the lump sum (stipulated) price(s), together with any Unit Prices indicated in Paragraph 3.02 and shown in the bid schedule.

B. Lump Sum Bids may be one of the following:

1. Lump Sum Price (Base Bid and Alternates)

Copyright© 2018 National Society of Professional Engineers, American Council of Engineering Companies, and American Society of Civil Engineers. All rights reserved.

3.02 *Unit Price Bids*

A. Bidder will perform the following Work at the indicated unit prices as shown in the Bid Schedule.

B. Bidder acknowledges that:

1. each Bid Unit Price includes an amount considered by Bidder to be adequate to cover Contractor's overhead and profit for each separately identified item, and

2. estimated quantities are not guaranteed, and are solely for the purpose of comparison of Bids, and final payment for all Unit Price Work will be based on actual quantities, determined as provided in the Contract Documents.

3.03 *Total Bid Price (Lump Sum and Unit Prices)*

Copyright© 2018 National Society of Professional Engineers, American Council of Engineering Companies, and American Society of Civil Engineers. All rights reserved.

Revised Addendum #1
8/11/2026

BID SCHEDULE

PROPOSED
WHEELING AASF #2 TAXIWAY REPAIR
FOR THE
WV ARMY NATIONAL GUARD
OHIO COUNTY, WEST VIRGINIA

NOTE: Bid PRICE amounts are to be shown in both words and figures. In case of discrepancy, the amount shown in words will govern. Bids shall include sales tax and all other applicable taxes and fees.

Item #	Qty.	UNIT	DESCRIPTION	UNIT PRICE	UNIT PRICE WRITTEN IN WORDS	TOTAL PRICE
1	1	LS	MOBILIZATION	$220,637.00	Two Hundred Twenty Thousand Six Hundred Thirty Seven Dollars and No Cents	$220,637.00
2	700	LF	SILT FENCE	$10.00	Ten Dollars and No Cents	$7,000.00
3	2	EA	INLET PROTECTION	$1,000.00	One Thousand Dollars and No Cents	$2,000.00
4	720	SY	COLD MILLING	$26.50	Twenty Six Dollars and No Cents	$19.080.00
5	1	LS	REGRADING OF EDGES	$25,000.00	Twenty Five Thousand Dollars and No Cents	$25,000.00

Copyright© 2018 National Society of Professional Engineers, American Council of Engineering Companies, and American Society of Civil Engineers. All rights reserved.

Revised Addendum #1
8/11/2026

Item #	Qty.	UNIT	DESCRIPTION	UNIT PRICE	UNIT PRICE WRITTEN IN WORDS	TOTAL PRICE
6	200	CY	UNDERCUT	$300.00	Three Hundred Dollars and No Cents	$60,000.00
7	4,000	SY	P-209 CRUSHED AGGREGATE BASE COURSE	$54.00	Fifty Four Dollars and No Cents	$216,000.00
8	4,000	SY	P-501 CEMENT CONCRETE PAVEMENT	$310.00	Three Hundred Ten Dollars and No Cents	$1,240,000.00
9	90	TN	P-401 ASPHALT MIX PAVEMENT	$351.00	Three Hundred Fifty One Dollars and No Cents	$31,590.00
10	8,000	LF	P-605 JOINT SEALANT FOR PAVEMENTS	$13.00	Thirteen Dollars and No Cents	$104,000.00
11	2	EA	SLOPEWALL FOR UNDERDRAIN	$1,400.00	One Thousand Four Hundred Dollars and No Cents	$2,800.00
12	470	LF	4" UNDERDRAIN	$72.00	Seventy Two Dollars and No Cents	$33,840.00

Copyright© 2018 National Society of Professional Engineers, American Council of Engineering Companies, and American Society of Civil Engineers. All rights reserved.

Revised Addendum #1
8/11/2026

Item #	Qty.	UNIT	DESCRIPTION	UNIT PRICE	UNIT PRICE WRITTEN IN WORDS	TOTAL PRICE
13	162	LF	4" SOLID PIPE	$70.00	Seventy Dollars and No Cents	$11,340.00
14	1	LS	PAVEMENT MARKINGS	$35,900.00	Thirty Five Thousand Nine Hundred Dollars and No Cents	$35,900.00
15	1	EA	LOWER EXISTING INLET	$3,600.00	Three Thousand Six Hundred Dollars and No Cents	$3,600.00
16	6	EA	GROUNDING ROD	$660.00	Six Hundred Sixty Dollars and No Cents	$3,960.00
17	1	LS	LOW PROFILE BARRICADES	$11,700.00	Eleven Thousand Seven Hundred Dollars and No Cents	$11,700.00
18	1	LS	SEED AND MULCH	$12,000.00	Twelve Thousand Dollars and No Cents	$12,000.00
19	667	CY	UNCLASSIFIED EXCAVATION	$59.00	Fifty Nine Dollars and No Cents	$39,353.00

Copyright© 2018 National Society of Professional Engineers, American Council of Engineering Companies, and American Society of Civil Engineers. All rights reserved.

Revised Addendum #1
8/11/2026

Item #	Qty.	UNIT	DESCRIPTION	UNIT PRICE	UNIT PRICE WRITTEN IN WORDS	TOTAL PRICE
20	30	EA	MOORING POINTS	$340.00	Three Hundred Forty Dollars and No Cents	$10,200.00

TOTAL BID: Two Million Ninety Thousand Dollars and No Cents
(Words)

(Words) ($ 2,090,000.00 (Figures))

(Amounts are to be shown in both words and figures. In case of discrepancy, the amount shown in words will govern.)

Copyright© 2018 National Society of Professional Engineers, American Council of Engineering Companies, and American Society of Civil Engineers. All rights reserved.

Revised Addendum #1
8/11/2026
ADDITIVE ALTERNATE #1

Item #	Qty.	UNIT	DESCRIPTION	UNIT PRICE	UNIT PRICE WRITTEN IN WORDS	TOTAL PRICE
21	1,605	SY	P-209 CRUSHED AGGREGATE BASE COURSE	$54.00	Fifty Four Dollars and No Cents	$86,670.00
22	1,605	SY	P-501 CEMENT CONCRETE PAVEMENT	$310.00	Three Hundred Ten Dollars and No Cents	$497,550.00
23	2,600	LF	P-605 JOINT SEALANT FOR PAVEMENTS	$13.00	Thirteen Dollars and No Cents	$33,800.00
24	270	CY	UNCLASSIFIED EXCAVATION	$59.00	Fifty Nine Dollars and No Cents	$15,930.00
25	EA	15	MOORING POINT	$340.00	Three Hundred Forty Dollars and No Cents	$5, 100.00
26	EA	1	GROUNDING ROD	$660.00	Six Hundred Sixty Dollars and No Cents	$660.00

TOTAL ADDITIVE ALTERNATE #1 BID: Six Hundred Thirty Nine Thousand Seven Hundred Ten Dollars and No Cents
(Words)

(Words) ($ 639,710.00 (Figures))

(Amounts are to be shown in both words and figures. In case of discrepancy, the amount shown in words will govern.)

Copyright© 2018 National Society of Professional Engineers, American Council of Engineering Companies, and American Society of Civil Engineers. All rights reserved.

Revised Addendum #1
8/11/2026
ADDITIVE ALTERNATE #2

Item #	Qty.	UNIT	DESCRIPTION	UNIT PRICE	UNIT PRICE WRITTEN IN WORDS	TOTAL PRICE
27	1,605	SY	P-209 CRUSHED AGGREGATE BASE COURSE	$54.00	Fifty Four Dollars and No Cents	$86,670.00
28	1,605	SY	P-501 CEMENT CONCRETE PAVEMENT	$310.00	Three Hundred Ten Dollars and No Cents	$497,550.00
29	2,600	LF	P-605 JOINT SEALANT FOR PAVEMENTS	$13.00	Thirteen Dollars and No Cents	$33,800.00
30	1	EA	GROUNDING ROD	$660.00	Six Hundred Sixty Dollars and No Cents	$660.00
31	5	EA	MOORING POINT	$340.00	Three Hundred Forty Dollars and No Cents	$1,700.00
32	270	CY	UNCLASSIFIED EXCAVATION	$59.00	Fifty Nine Dollars and No Cents	$15,930.00

TOTAL ADDITIVE ALTERNATE #2 BID: Six Hundred Thirty Six Thousand Three Hundred Ten Dollars and No Cents
(Words)

(Words) ($ 636,310.00)
(Figures)

(Amounts are to be shown in both words and figures. In case of discrepancy, the amount shown in words will govern.)

Copyright© 2018 National Society of Professional Engineers, American Council of Engineering Companies, and American Society of Civil Engineers. All rights reserved.

3.04 *Method of Award*

If at the time this contract is to be awarded, the lowest total bid submitted by a qualified, responsive, responsible Bidder does not exceed the amount of funds then estimated by the Owner, as available to finance the contract, the construction contract will be awarded. Awarding of Additive Alternate(s) will not affect the lowest Bidder. If such bids exceed such amount, the Owner may reject all bids.

The Owner will award the contract on the total base bid amount inclusive or exclusive of alternates as determined by the Owner and submitted by a qualified, responsive, responsible Bidder. Alternates, if accepted, shall be accepted in the order in which they are listed on the bid form. Any unaccepted alternate contained within a bid shall expire 90 days after the date of the opening of bids for review. Determination of the lowest qualified responsible bidder shall be based on the sum of the base bid and any alternates accepted. Alternate selection will be identified in the Purchase Order. **This project contains Two (2) alternates.**

ARTICLE 4—TIME OF COMPLETION

4.01 Bidder agrees that the Work will be substantially complete and will be completed and ready for final payment on or before the dates or within the number of calendar days indicated in the Agreement.

4.02 Bidder accepts the provisions of the Specifications as to liquidated damages.

ARTICLE 5—BIDDER'S ACKNOWLEDGEMENTS: ACCEPTANCE PERIOD, INSTRUCTIONS, AND RECEIPT OF ADDENDA

5.01 *Bid Acceptance Period*

A. This Bid will remain subject to acceptance for 90 days after the Bid opening, or for such longer period of time that Bidder may agree to in writing upon request of Owner.

5.02 *Instructions to Bidders*

A. Bidder accepts all of the terms and conditions of the Instructions to Bidders, including without limitation those dealing with the disposition of Bid security.

ARTICLE 6—BIDDER'S REPRESENTATIONS AND CERTIFICATIONS

6.01 *Bidder's Representations*

A. In submitting this Bid, Bidder represents the following:

1. Bidder has examined and carefully studied the Bidding Documents, including Addenda.
2. Bidder has visited the Site, conducted a thorough visual examination of the Site and adjacent areas, and become familiar with the general, local, and Site conditions that may affect cost, progress, and performance of the Work.
3. Bidder is familiar with all Laws and Regulations that may affect cost, progress, and performance of the Work**.**
4. Bidder has carefully studied the reports of explorations and tests of subsurface conditions at or adjacent to the Site and the drawings of physical conditions relating to existing surface or subsurface structures at the Site that have been identified in the Supplementary Conditions, with respect to the Technical Data in such reports and drawings.

Copyright© 2018 National Society of Professional Engineers, American Council of Engineering Companies, and American Society of Civil Engineers. All rights reserved.

5. Bidder has carefully studied the reports and drawings relating to Hazardous Environmental Conditions, if any, at or adjacent to the Site that have been identified in the Supplementary Conditions, with respect to Technical Data in such reports and drawings.
6. Bidder has considered the information known to Bidder itself; information commonly known to contractors doing business in the locality of the Site; information and observations obtained from visits to the Site; the Bidding Documents; and the Technical Data identified in the Supplementary Conditions or by definition, with respect to the effect of such information, observations, and Technical Data on (a) the cost, progress, and performance of the Work; (b) the means, methods, techniques, sequences, and procedures of construction to be employed by Bidder, if selected as Contractor; and (c) Bidder's (Contractor's) safety precautions and programs.
7. Based on the information and observations referred to in the preceding paragraph, Bidder agrees that no further examinations, investigations, explorations, tests, studies, or data are necessary for the performance of the Work at the Contract Price, within the Contract Times, and in accordance with the other terms and conditions of the Contract.
8. Bidder is aware of the general nature of work to be performed by Owner and others at the Site that relates to the Work as indicated in the Bidding Documents.
9. Bidder has given Engineer written notice of all conflicts, errors, ambiguities, or discrepancies that Bidder has discovered in the Bidding Documents, and of discrepancies between Site conditions and the Contract Documents, and the written resolution thereof by Engineer is acceptable to Contractor.
10. The Bidding Documents are generally sufficient to indicate and convey understanding of all terms and conditions for performance and furnishing of the Work.
11. The submission of this Bid constitutes an incontrovertible representation by Bidder that without exception the Bid and all prices in the Bid are premised upon performing and furnishing the Work required by the Bidding Documents.

6.02 *Bidder's Certifications*

A. The Bidder certifies the following:

1. This Bid is genuine and not made in the interest of or on behalf of any undisclosed individual or entity and is not submitted in conformity with any collusive agreement or rules of any group, association, organization, or corporation.
2. Bidder has not directly or indirectly induced or solicited any other Bidder to submit a false or sham Bid.
3. Bidder has not solicited or induced any individual or entity to refrain from bidding.
4. Bidder has not engaged in corrupt, fraudulent, collusive, or coercive practices in competing for the Contract. For the purposes of this Paragraph 8.02.A:
   a. Corrupt practice means the offering, giving, receiving, or soliciting of anything of value likely to influence the action of a public official in the bidding process.
   b. Fraudulent practice means an intentional misrepresentation of facts made (a) to influence the bidding process to the detriment of Owner, (b) to establish bid prices at artificial non-competitive levels, or (c) to deprive Owner of the benefits of free and open competition.

Copyright© 2018 National Society of Professional Engineers, American Council of Engineering Companies, and American Society of Civil Engineers. All rights reserved.

c. Collusive practice means a scheme or arrangement between two or more Bidders, with or without the knowledge of Owner, a purpose of which is to establish bid prices at artificial, non-competitive levels.

d. Coercive practice means harming or threatening to harm, directly or indirectly, persons or their property to influence their participation in the bidding process or affect the execution of the Contract.

Copyright© 2018 National Society of Professional Engineers, American Council of Engineering Companies, and American Society of Civil Engineers. All rights reserved.

Revised Addendum #1
8/11/2026

BIDDER hereby submits this Bid as set forth above:

Bidder:

McClanahan Construction Company, LLC
(typed or printed name of organization)

By: Bruce D. McClanahan
(individual's signature)

Name: Bruce D. McClanahan
(typed or printed)

Title: Managing Member
(typed or printed)

Date: August 20, 2026
(typed or printed)

If Bidder is a corporation, a partnership, or a joint venture, attach evidence of authority to sign.

Attest: Bruce D. McClanahan
(individual's signature)

Name: Bruce D. McClanahan
(typed or printed)

Title: Managing Member
(typed or printed)

Date: August 20, 2026
(typed or printed)

Address for giving notices:
744 Poca River Rd N
Poca, WV 25159

Bidder's Contact:

Name: Bruce D. McClanahan
(typed or printed)

Title: Managing Member
(typed or printed)

Phone: 304-776-3355

Email: bruce@mcclanahanconstruction.com

Address:
744 Poca River Rd N
Poca, WV 25159

Bidder's Contractor License No.: (if applicable) WVCL # 004165

Copyright© 2018 National Society of Professional Engineers, American Council of Engineering Companies, and American Society of Civil Engineers. All rights reserved.

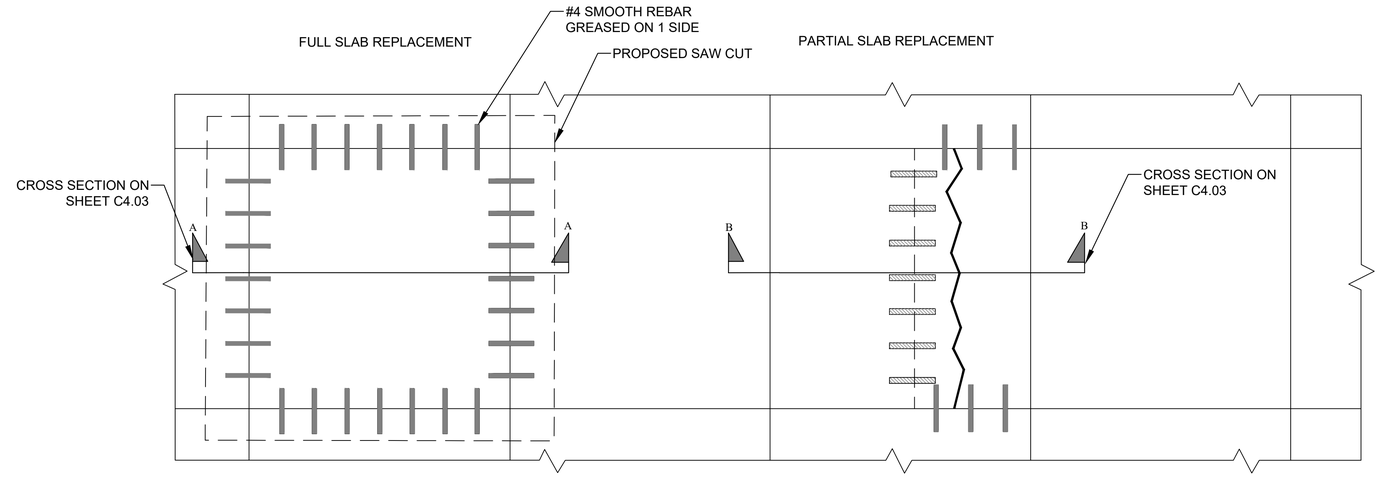

RIGID PAVEMENT REPAIR - PLAN VIEW

NOT TO SCALE

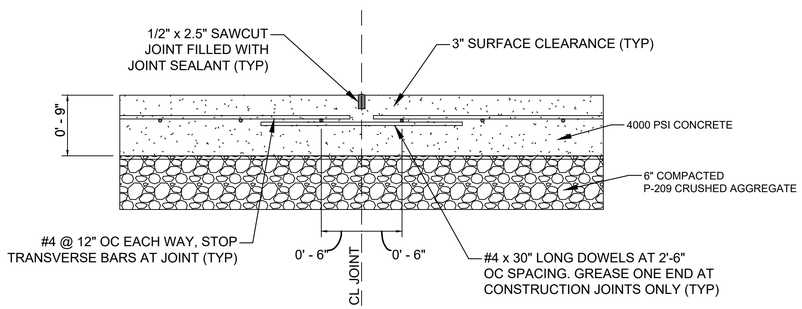

TRANSVERSSE CONTROL JOINT (T.C.J.)
LOCATE CONSTRUCTION JOINTS AT CONTROL JOINTS

NOT TO SCALE

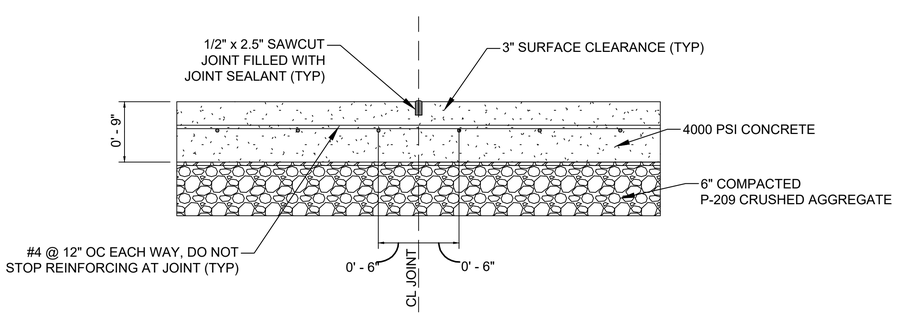

LONGITUDINAL CONTROL JOINT (L.C.J.)
LOCATE CONSTRUCTION JOINTS AT CONTROL JOINTS

NOT TO SCALE

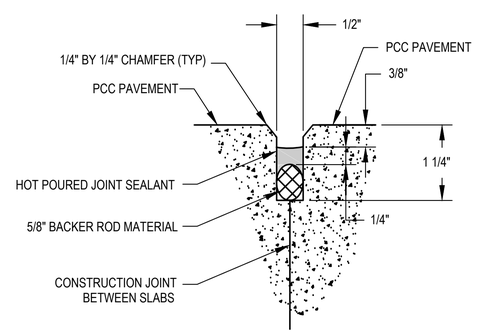

PCC CONSTRUCTION JOINT DETAIL

NOT TO SCALE

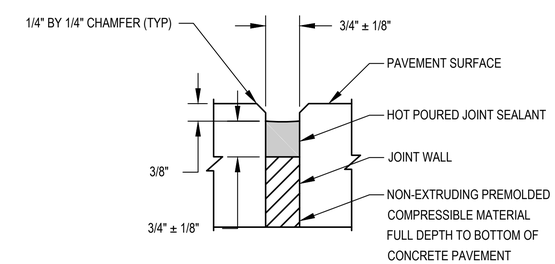

EXPANSION JOINT DETAIL

NOT TO SCALE

1

THRASHER
THE THRASHER GROUP INC.
600 WHITE OAKS BLVD,
P.O. BOX 940
BRIDGEPORT, WV 26330

P (304) 624-4108
F (304) 624-7831

www.thethrashergroup.com

THE INFORMATION CONTAINED HEREIN IS THE SOLE PROPERTY OF THE THRASHER GROUP, INC. REPRODUCTION OF THESE DOCUMENTS IN WHOLE, OR IN PART FOR ANY REASON WITHOUT PRIOR WRITTEN PERMISSION IS STRICTLY PROHIBITED.

COPYRIGHT © 2026
THE THRASHER GROUP, INC.

NO.	BY	DATE	DESCRIPTION
1	NMP	8/12/2026	ADDED JOINT DETAILS

WHEELING - AASF2
TAXIWAY REPAIRS
WEST VIRIGNIA ARMY NATIONAL GUARD
OHIO COUNTY, WEST VIRIGNIA

DRAWN: DATE:
CHECKED: DATE:
APPROVED: DATE:

PROJECT No.
T80-11612

DETAILS

SHEET No.
C4.02

CAD FILE: R:\080\T80-11612.00 - WVANG - Wheeling AASF2 Taxiway Repair\Drawing\T80-11612.00 Details.dwg PLOT DATE/TIME: 8/12/2026 7:35 AM LAYOUT: C4.02 USER: nicole price

Figure B11-1. Army Mooring Point

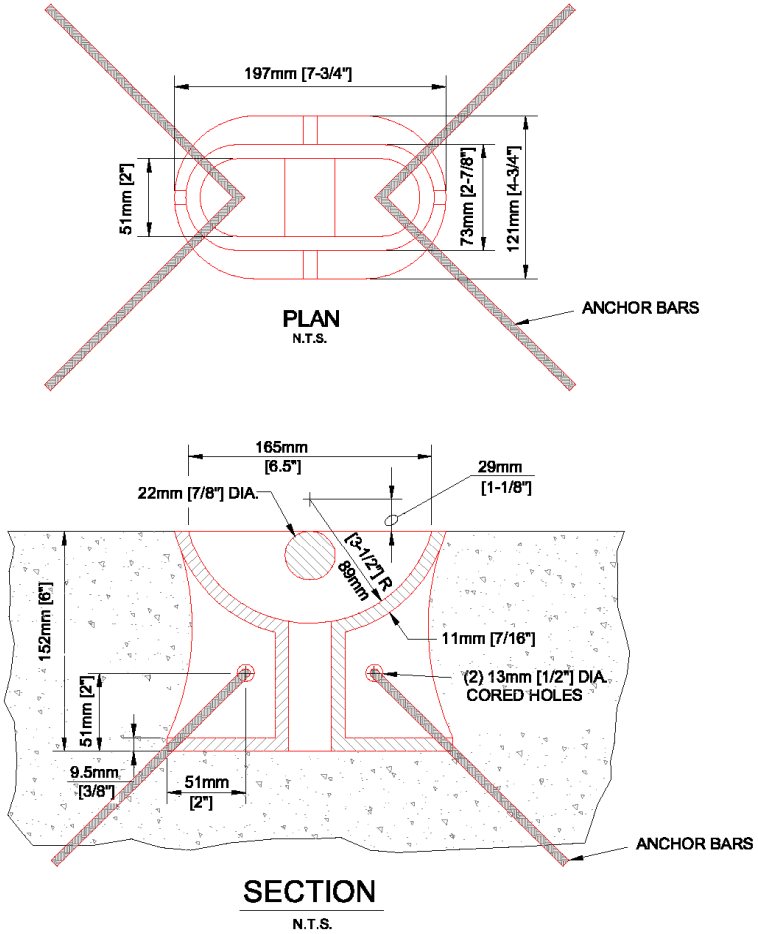

NOTES

1. MOORING DEVICE TO BE CAST IN DUCTILE IRON 80-55-06 OR EQUAL

2. ANCHOR RODS SHALL BE #3 DEFORMED REBAR, 380 mm (15") LONG AND BENT DOWNWARD AT 45 DEGREES. TWO ANCHOR BARS PER MOORING DEVICE.

Department of Administration Purchasing Division 2019 Washington Street East Post Office Box 50130 Charleston, WV 25305-0130	**State of West Virginia** **Centralized Request for Quote** **Construction**

Proc Folder: 2026954 **Doc Description:** Wheeling AASF#2 Taxiway Repairs (Construction) **Proc Type:** Central Purchase Order			**Reason for Modification:** Addendum No. 2
Date Issued	**Solicitation Closes**	**Solicitation No**	**Version**
2026-08-17	2026-08-20 13:30	CRFQ 0603 ADJ2700000007	3

BID RECEIVING LOCATION

BID CLERK
DEPARTMENT OF ADMINISTRATION
PURCHASING DIVISION
2019 WASHINGTON ST E
CHARLESTON WV 25305
US

VENDOR

Vendor Customer Code: 000000206945

Vendor Name : McClanahan Construction Company, LLC

Address : 744 Poca River Rd N, Poca, WV 25159

Street : 744 Poca River Rd N

City : Poca

State : WV **Country :** United States **Zip :** 25159

Principal Contact : Bruce D. McClanahan

Vendor Contact Phone: 304-776-3355 **Extension:**

FOR INFORMATION CONTACT THE BUYER
David H Pauline
304-558-0067
david.h.pauline@wv.gov

Vendor Signature X Bruce D. McClanahan **FEIN#** 55-0698258 **DATE** August 20, 2026

All offers subject to all terms and conditions contained in this solicitation

ADDITIONAL INFORMATION
Addendum No. 2 To provide Document c2.06 that was inadvertently omitted from Addendum 1 (see attached) The Bid opening date and time remains August 20, 2026, at 1:30 pm EST. No other changes.

INVOICE TO		SHIP TO	
ADJUTANT GENERALS OFFICE 1707 COONSKIN DR CHARLESTON US	WV	ARMY AVIATION SUPPORT FACILITY 2 538 GIRTYS POINT RD WHEELING US	WV

Line	Comm Ln Desc	Qty	Unit Issue	Unit Price	Total Price
1	Wheeling AASF#2 Taxiway Repairs (Construction) BASE BID	1	Base Bid	$2,090,000.00	$2,090,000.00

Comm Code	Manufacturer	Specification	Model #
72000000			

Extended Description:
BASE BID-Provide labor, materials tools, supplies and equipment to provide taxiway repairs per the attached plans and specifications

INVOICE TO		SHIP TO	
ADJUTANT GENERALS OFFICE 1707 COONSKIN DR CHARLESTON US	WV	ARMY AVIATION SUPPORT FACILITY 2 538 GIRTYS POINT RD WHEELING US	WV

Line	Comm Ln Desc	Qty	Unit Issue	Unit Price	Total Price
2	ALTERNATE No.1- Full Slab Replacement in Area #1	1	Alternate No. 1	$639,710.00	$639,710.00

Comm Code	Manufacturer	Specification	Model #
72000000			

Extended Description:
ALTERNATE No. 1-Provide labor, materials tools, supplies and equipment to provide full slab replacement taxiway repairs in Area #1 per the attached plans and specifications.

INVOICE TO	SHIP TO
ADJUTANT GENERALS OFFICE 1707 COONSKIN DR CHARLESTON WV US	ARMY AVIATION SUPPORT FACILITY 2 538 GIRTYS POINT RD WHEELING WV US

Line	Comm Ln Desc	Qty	Unit Issue	Unit Price	Total Price
3	ALTERNATE No.2- Full Slab Replacement in Area #2	1	Alternate No. 2	$636,310.00	$636,310.00

Comm Code	Manufacturer	Specification	Model #
72000000			

Extended Description:
ALTERNATE No. 2-Provide labor, materials tools, supplies and equipment to provide full slab replacement taxiway repairs in Area #2 per the attached plans and specifications.

SCHEDULE OF EVENTS

Line	Event	Event Date
1	Mandatory Prebid Meeting At 11:00 am EST.	2026-08-04
2	Vendor Technical Questions Due By 11:00 am EST.	2026-08-10

ADDITIONAL TERMS AND CONDITIONS

See attached document(s) for additional Terms and Conditions

SOLICITATION NUMBER: CRFQ ADJ2700000007
Addendum Number: 2

The purpose of this addendum is to modify the solicitation identified as ("ADJ2700000007") to reflect the change(s) identified and described below.

Applicable Addendum Category:

☐ Modify bid opening date and time.

☐ Modify specifications of product or service being sought.

☐ Attachment of vendor questions and responses.

☐ Attachment of pre-bid sign-in sheet.

☒ Correction of error.

☒ Other.

Description of Modification to Solicitation:

1. To provide Document C2.06 in response to vendor questions that was inadvertently omitted from Addendum 1 (see attached)

2. The Bid Opening date and time remains August 20, 2026, at 1:30 pm EST.

   No other changes.

Additional Documentation: Documentation related to this Addendum (if any) has been included herewith as Attachment A and is specifically incorporated herein by reference.

Terms and Conditions:

1. All provisions of the Solicitation and other addenda not modified herein shall remain in full force and effect.

2. Vendor should acknowledge receipt of all addenda issued for this Solicitation by completing an Addendum Acknowledgment, a copy of which is included herewith. Failure to acknowledge addenda may result in bid disqualification. The addendum acknowledgement should be submitted with the bid to expedite document processing.

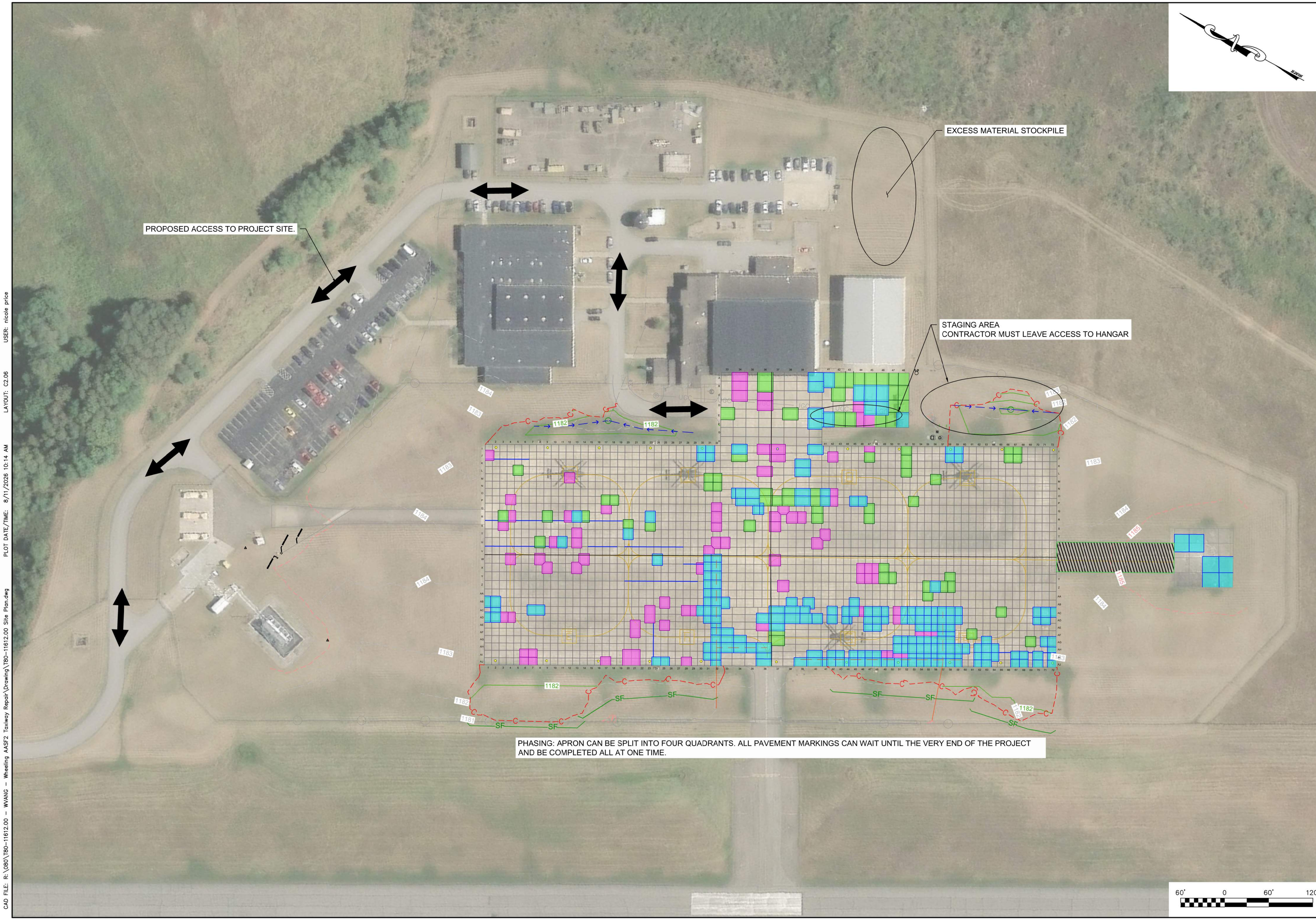

PHASING: APRON CAN BE SPLIT INTO FOUR QUADRANTS. ALL PAVEMENT MARKINGS CAN WAIT UNTIL THE VERY END OF THE PROJECT AND BE COMPLETED ALL AT ONE TIME.

THRASHER
THE THRASHER GROUP INC.
600 WHITE OAKS BLVD,
P.O. BOX 940
BRIDGEPORT, WV 26330

P (304) 624-4108
F (304) 624-7831

www.thethrashergroup.com

THE INFORMATION CONTAINED HEREIN IS THE SOLE PROPERTY OF THE THRASHER GROUP, INC. REPRODUCTION OF THESE DOCUMENTS IN WHOLE, OR IN PART FOR ANY REASON WITHOUT PRIOR WRITTEN PERMISSION IS STRICTLY PROHIBITED.

COPYRIGHT © 2026
THE THRASHER GROUP, INC.

NO.	BY	DATE	DESCRIPTION
1	NMP	8/11/2026	ADDED PHASING SHEET

WHEELING - AASF2
TAXIWAY REPAIRS
WEST VIRIGNIA ARMY NATIONAL GUARD
OHIO COUNTY, WEST VIRIGNIA

DRAWN: DATE:
CHECKED: DATE:
APPROVED: DATE:

PROJECT No.
T80-11612

PHASING PLAN

SHEET No.
1
C2.06

CAD FILE: R:\080\T80-11612.00 - WVANG - Wheeling AASF2 Taxiway Repair\Drawing\T80-11612.00 Site Plan.dwg PLOT DATE/TIME: 8/11/2026 10:14 AM LAYOUT: C2.06 USER: nicole.price

ADDENDUM ACKNOWLEDGEMENT FORM
SOLICITATION NO.: CRFQ ADJ2700000007

Instructions: Please acknowledge receipt of all addenda issued with this solicitation by completing this addendum acknowledgment form. Check the box next to each addendum received and sign below. Failure to acknowledge addenda may result in bid disqualification.

Acknowledgment: I hereby acknowledge receipt of the following addenda and have made the necessary revisions to my proposal, plans and/or specification, etc.

Addendum Numbers Received:
(Check the box next to each addendum received)

☒	Addendum No. 1	☐	Addendum No. 6
☒	Addendum No. 2	☐	Addendum No. 7
☐	Addendum No. 3	☐	Addendum No. 8
☐	Addendum No. 4	☐	Addendum No. 9
☐	Addendum No. 5	☐	Addendum No. 10

I understand that failure to confirm the receipt of addenda may be cause for rejection of this bid. I further understand that that any verbal representation made or assumed to be made during any oral discussion held between Vendor's representatives and any state personnel is not binding. Only the information issued in writing and added to the specifications by an official addendum is binding.

McClanahan Construction Company, LLC
Company

Bruce O. McClanahan
Authorized Signature

August 20, 2026
Date

NOTE: This addendum acknowledgement should be submitted with the bid to expedite document processing.

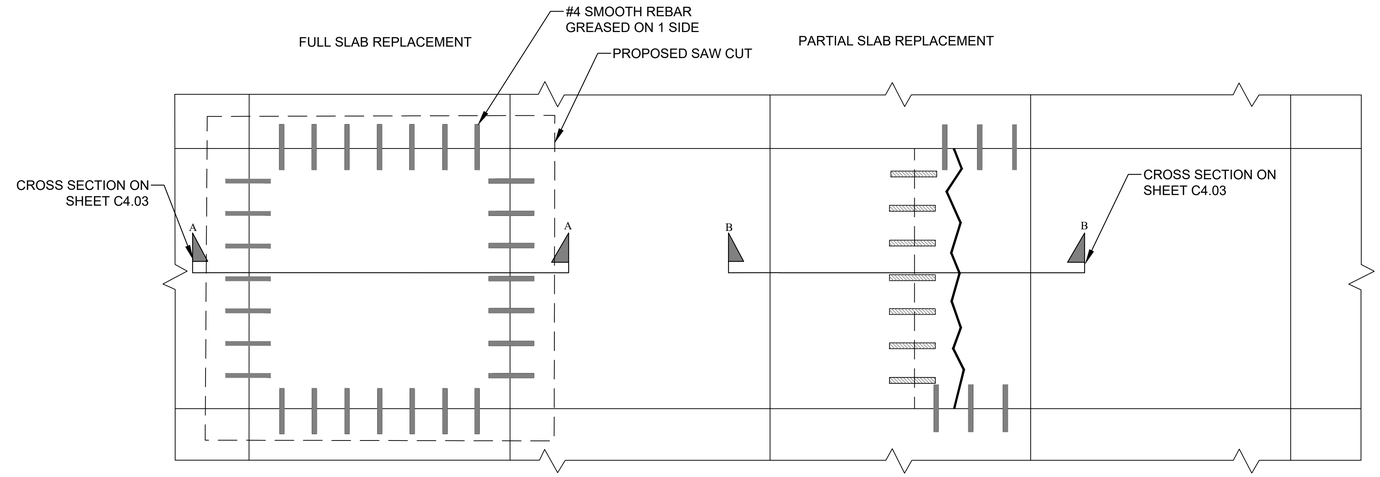

RIGID PAVEMENT REPAIR - PLAN VIEW

NOT TO SCALE

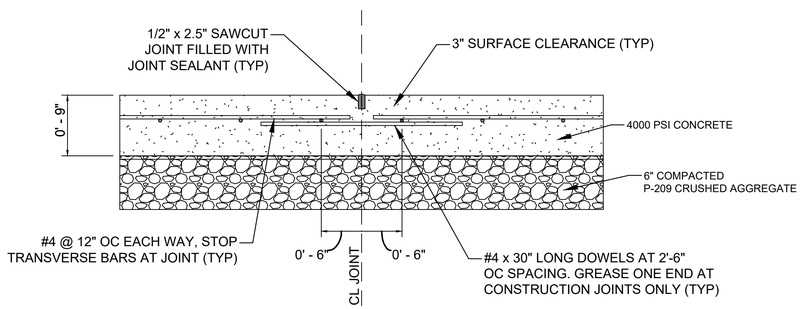

TRANSVERSSE CONTROL JOINT (T.C.J.)
LOCATE CONSTRUCTION JOINTS AT CONTROL JOINTS

NOT TO SCALE

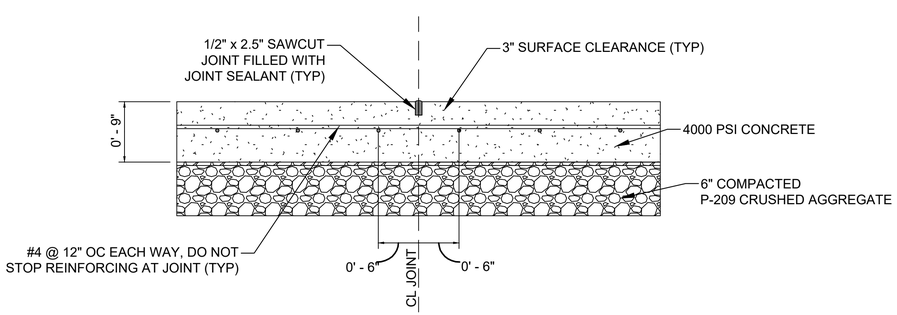

LONGITUDINAL CONTROL JOINT (L.C.J.)
LOCATE CONSTRUCTION JOINTS AT CONTROL JOINTS

NOT TO SCALE

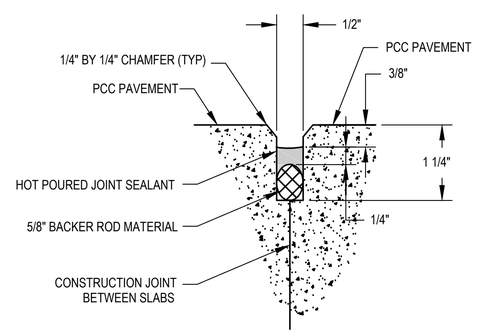

PCC CONSTRUCTION JOINT DETAIL

NOT TO SCALE

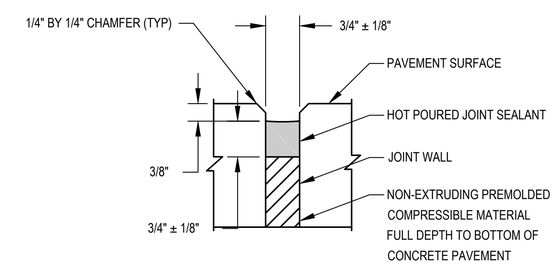

EXPANSION JOINT DETAIL

NOT TO SCALE

1

THRASHER
THE THRASHER GROUP INC.
600 WHITE OAKS BLVD,
P.O. BOX 940
BRIDGEPORT, WV 26330

P (304) 624-4108
F (304) 624-7831

www.thethrashergroup.com

THE INFORMATION CONTAINED HEREIN IS THE SOLE PROPERTY OF THE THRASHER GROUP, INC. REPRODUCTION OF THESE DOCUMENTS IN WHOLE, OR IN PART FOR ANY REASON WITHOUT PRIOR WRITTEN PERMISSION IS STRICTLY PROHIBITED.

COPYRIGHT © 2026
THE THRASHER GROUP, INC.

NO.	BY	DATE	DESCRIPTION
1	NMP	8/12/2026	ADDED JOINT DETAILS

WHEELING - AASF2
TAXIWAY REPAIRS
WEST VIRIGNIA ARMY NATIONAL GUARD
OHIO COUNTY, WEST VIRIGNIA

DRAWN: DATE:
CHECKED: DATE:
APPROVED: DATE:

PROJECT No.
T80-11612

DETAILS

SHEET No.
C4.02

CAD FILE: R:\080\T80-11612.00 - WVANG - Wheeling AASF2 Taxiway Repair\Drawing\T80-11612.00 Details.dwg PLOT DATE/TIME: 8/12/2026 7:35 AM LAYOUT: C4.02 USER: nicole price

Figure B11-1. Army Mooring Point

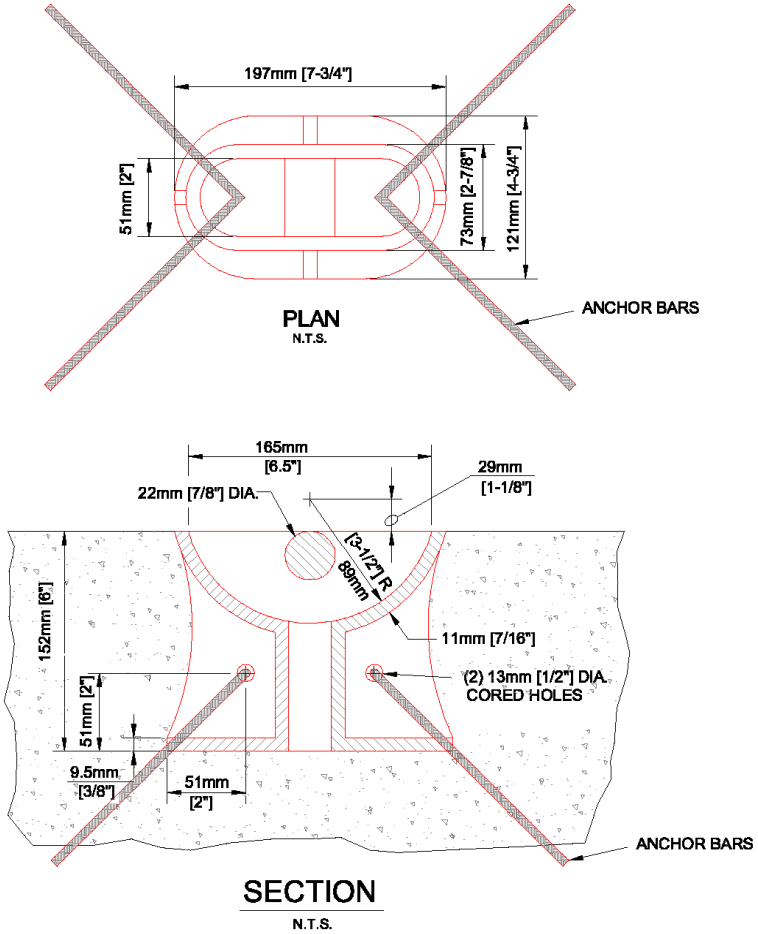

NOTES

1. MOORING DEVICE TO BE CAST IN DUCTILE IRON 80-55-06 OR EQUAL

2. ANCHOR RODS SHALL BE #3 DEFORMED REBAR, 380 mm (15") LONG AND BENT DOWNWARD AT 45 DEGREES. TWO ANCHOR BARS PER MOORING DEVICE.

TILTONSVILLE USGS MAP 2023

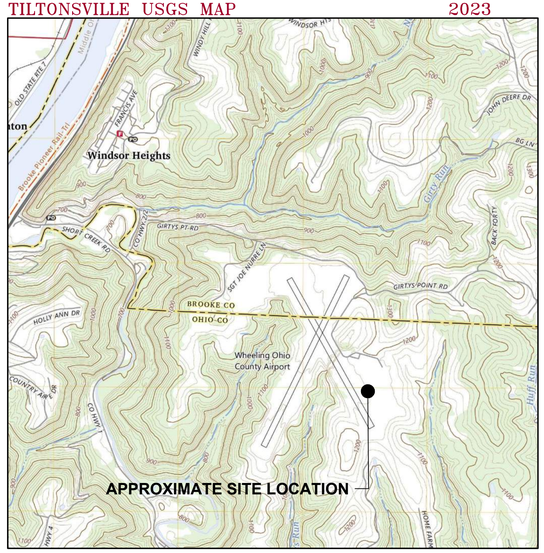

2000 ft. 0 2000 ft. 4000 ft.

VICINITY MAP SCALE

WEST VIRGINIA ARMY RESERVE NATIONAL GUARD

FOR

WHEELING AASF #2 TAXIWAY REPAIRS

T80-11612

OHIO COUNTY, WEST VIRGINIA

JULY 2026

SHEET INDEX

SHEET	DESCRIPTION
C1.00	GENERAL NOTES AND QUANTITIES
C2.00	OVERALL SITE PLAN
C2.01-C2.05	SITE PLAN
C3.00	PAVEMENT MARKING PLAN
C4.00-C4.03	DETAILS

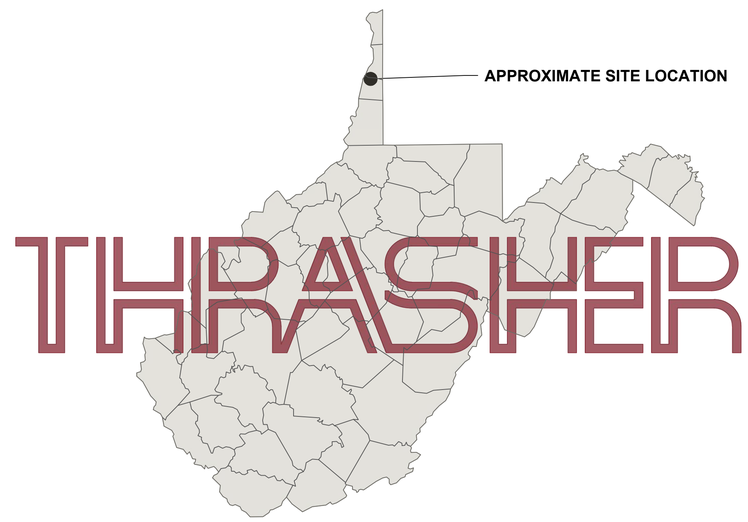

THRASHER

WEST VIRGINIA ARMY NATIONAL GUARD
PHONE: (304) 561-6317
1703 COONSKIN DR.
CHARLESTON, WV 25311-1085

CONTACTS

CLIENT'S CONTACT
WV ARMY NATIONAL GUARD
ATTN: JIM SKAGGS
(304)-719-8745

BRIDGEPORT, WV OFFICE
600 WHITE OAKS BLVD.
BRIDGEPORT, WV 26330
(304) 624-4108
PO BOX 940

ENGINEER
THE THRASHER GROUP
ATTN: NICOLE M. PRICE, PE
(304) 423-5991

THIS PLAN SET DEPICTS THE NECESSARY INFORMATION FOR EROSION AND SEDIMENT CONTROL MEASURES AS REQUIRED BY THE WVDEP FOR STORM WATER PERMITTING PURPOSES.

NICOLE MARIE PRICE REGISTERED 21372 STATE OF WEST VIRGINIA PROFESSIONAL ENGINEER 7/6/2026

NICOLE M. PRICE, WV P.E. #21372

☐ ISSUED FOR PERMITS DATE: _____ BY: _____

☐ ISSUED FOR BID DATE: _____ BY: _____

☐ ISSUED FOR CONSTRUCTION DATE: _____ BY: _____

WEST VIRGINIA 811

CONTRACTOR SHALL NOTIFY THE ONE-CALL SYSTEM OF THE INTENDED EXCAVATION OR DEMOLITION NOT LESS THAN FORTY-EIGHT (48) HOURS, EXCLUDING SATURDAYS, SUNDAYS AND LEGAL FEDERAL OR STATE HOLIDAYS, NOR MORE THAN TEN (10) WORK DAYS PRIOR TO THE BEGINNING OF SUCH WORK.
CALL811.COM/811-IN-YOUR-STATE

PLAN REPRODUCTION WARNING

THESE PLANS ARE INTENDED TO BE PLOTTED ON ANSI D (22" X 34") SHEETS. FOR REDUCTIONS, REFER TO GRAPHIC SCALE. THESE PLANS HAVE BEEN CREATED FOR FULL COLOR PLOTTING. ANY SET OF THESE PLANS THAT IS NOT PLOTTED IN FULL COLOR SHALL NOT BE CONSIDERED ADEQUATE FOR CONSTRUCTION PURPOSES. **WARNING**: INFORMATION MAY BE LOST IN COPYING AND/OR GRAY SCALE PLOTTING.

THE INFORMATION CONTAINED HEREIN IS THE SOLE PROPERTY OF THE THRASHER GROUP INC. REPRODUCTION OF THESE DOCUMENTS IN WHOLE OR IN PART, FOR ANY REASON WITHOUT PRIOR WRITTEN PERMISSION, IS STRICTLY PROHIBITED.

CAD FILE: R:\080\T80-11612.00 - WVANG - Wheeling AASF2 Taxiway Repair\Drawing\T80-11612.00 Cover Sheet.dwg PLOT DATE/TIME: 7/6/2026 10:55 AM USER: nicole price

GENERAL NOTES:

1. THE CONTRACTOR SHALL LOCATE AND PROTECT EXISTING UTILITIES AND FACILITIES FROM DAMAGE BY EQUIPMENT OR PERSONNEL. THE CONTRACTOR SHALL CONTACT ALL UTILITY AND FACILITY AGENCIES FOR FIELD MARKING PRIOR TO BEGINNING CONSTRUCTION. THE LOCATIONS OF EXISTING UNDERGROUND UTILITIES ARE SHOWN IN AN APPROXIMATE WAY ONLY AND HAVE NOT BEEN INDEPENDENTLY VERIFIED BY THE OWNER OR ITS REPRESENTATIVE. THE EXISTING UTILITY INFORMATION IS THE BEST AVAILABLE AND MAY NOT BE COMPLETELY ACCURATE OR REPRESENTATIVE OF ACTUAL CONDITIONS. THE CONTRACTOR SHALL DETERMINE THE EXACT LOCATION OF ALL EXISTING UTILITIES BEFORE COMMENCING WORK, AND AGREES TO BE FULLY RESPONSIBLE FOR ANY AND ALL DAMAGES WHICH MIGHT BE OCCASIONED BY THE UNDERGROUND UTILITIES. THE CONTRACTOR SHALL NOTIFY THE ENGINEER AND/OR OWNER IN WRITING, OF ANY EXISTING DAMAGED UTILITIES PRIOR TO BEGINNING CONSTRUCTION. ANY UTILITIES OR FACILITIES DAMAGED DURING THE PROJECT BY THE CONTRACTOR OR EQUIPMENT SHALL BE PROMPTLY REPAIRED AT THE CONTRACTOR'S EXPENSE. HAND DIGGING TO PROTECT UTILITIES FROM DAMAGE SHOULD BE ANTICIPATED.

2. THE CONTRACTOR SHALL HAVE ON THE SITE AT ALL TIMES A EXPERIENCED SUPERINTENDENT CAPABLE OF READING AND UNDERSTANDING THE CONSTRUCTION DOCUMENTS AND THOROUGHLY EXPERIENCED IN THE TYPE OF WORK BEING PERFORMED, AND SHALL BE ABLE TO COORDINATE WITH THE ENGINEER.

3. THE CONTRACTOR SHALL BE RESPONSIBLE FOR OBTAINING A VALID WEST VIRGINIA GENERAL CONTRACTOR'S LICENSE AND PAYING ALL APPLICABLE STATE AND LOCAL TAXES.

4. THE CONTRACTOR IS RESPONSIBLE FOR VERIFICATION OF ALL PLAN AND ELEVATION DIMENSIONS OF THE VARIOUS WORK ITEMS ON THIS PROJECT.

5. IN THE EVENT AN ERROR WITH THE PLANS SEEMS APPARENT, THE MATTER MUST BE TAKEN UP WITH THE ENGINEER FOR CAREFUL REVIEW BEFORE PROCEEDING WITH CONSTRUCTION.

6. THE OWNER RESERVES THE RIGHT TO CONTRACT TO AND PERFORM OTHER OR ADDITIONAL WORK ADJACENT TO AND WITHIN THE WORK AREA COVERED BY THIS CONTRACT. WHEN SEPARATE CONTRACTS ARE LEFT WITHIN THE LIMITS OF ANY ONE PROJECT, EACH CONTRACTOR SHALL CONDUCT THEIR WORK SO AS NOT TO INTERFERE WITH OR HINDER THE PROGRESS OR THE COMPLETION OF THE WORK BEING COMPLETED BY OTHER CONTRACTORS. THE CONTRACTORS WORKING ON THE SAME PROJECT SHALL COOPERATE WITH EACH OTHER AS ORDERED BY THE OWNER AND/OR ENGINEER.

7. ALL DISTURBED AREAS, INCLUDING THE CONTRACTORS STAGING AREA, GRADING LIMITS, WASTE AREAS, ETC. SHALL BE RESTORED TO A SMOOTH LINE AND GRADE WITH POSITIVE DRAINAGE. THE CONTRACTOR SHALL SEED AND MULCH ALL DISTURBED AREAS. THERE WILL BE NO MEASUREMENT FOR PAYMENT OF SEEDING AND MULCHING AS IT SHOULD BE MADE INCIDENTIAL TO THE REGRADING OF EDGES.

8. ALL BROKEN CONCRETE & ASPHALT, TRASH, RUBBISH, ORGANICS, & OTHER UNSUITABLE MATERIAL SHALL BE DISPOSED OF OFF SITE BY THE CONTRACTOR.

9. ALL LOOSE MATERIALS (DIRT, STONE, PAVEMENT, FORMING, ETC.) MUST BE KEPT WITHIN THE LIMITS OF CONSTRUCTION. WHEN THE CONSTRUCTION BARRIERS ARE MOVED DURING CONSTRUCTION, THE CLEANUP OF THE AREAS OUTSIDE THE BARRIERS SHALL OCCUR IMMEDIATELY.

10. THE CONTRACTOR SHALL MAINTAIN POSITIVE DRAINAGE ON THE PROJECT FOR THE COMPLETE DURATION.

11. THE CONTRACTOR SHALL COORDINATE CONCRETE REPLACEMENT SCHEDULE WITH THE ARMY NATIONAL GUARD OPERATIONS SCHEDULE SO THAT ACCESS TO AND FROM THE RUNWAY IS MAINTAINED THROUGHOUT CONSTRUCTION.

12. ALL EXISTING AIRCRAFT ANCHOR POINTS /TIE DOWNS WILL REMAIN IN PLACE AND NEW CONCRETE SHOULD BE POURED AROUND THE EXISTING FEATURES.

13. ALL GROUNDING RODS WILL BE REPLACED.

14. ALL EXISTING CONCRETE SLABS ADJACENT TO THE NEW CONCRETE SLABS SHALL BE TIED INTO THE PROPOSED CONCRETE SLABS AND SHALL BE MADE INCIDENTAL TO THE UNIT BID FOR CONCRETE REPLACEMENT. ALL TIE-INS SHALL PROVIDE POSITIVE DRAINAGE TO AVOID ANY PONDING ON THE CONCRETE SLABS.

15. WHERE SOFT MATERIALS ARE ENCOUNTERED THEY SHALL BE UNDERCUT. COSTS SHOULD INCLUDE EXCAVATION, STONE BACKFILL AND SHALL BE INCIDENTAL TO COST OF THE UNDERCUT.

16. ALL WORK PERFORMED AND ALL MATERIAL FURNISHED SHALL CONFORM TO THE LINES, GRADES, CROSS SECTIONS, DIMENSIONS, AND MATERIAL REQUIREMENTS SHOWN ON THE CONSTRUCTION DRAWINGS. THE CONSTRUCTION DRAWINGS SHOW THE CONSTRUCTION LINES, GRADES, DEPTHS AND DIMENSIONS ON WHICH ESTIMATED QUANTITIES ARE BASED. THE CONSTRUCTION LINES, GRADES, DEPTHS AND DIMENSIONS ARE SUBJECT TO VARIATION NECESSARY TO OBTAIN SUBGRADE AND/OR FINAL GRADE SATISFACTORY TO THE ENGINEER.

17. WHERE THE INITIATION OF STABILIZATION MEASURES BY THE SEVENTH DAY AFTER CONSTRUCTION ACTIVITY TEMPORARILY OR PERMANENTLY CEASES IS PRECLUDED BY SNOW COVER, STABILIZATION MEASURES SHALL BE INITIATED AS SOON AS CONDITIONS ALLOW.

18. WHERE CONSTRUCTION ACTIVITY WILL RESUME ON A PORTION OF THE SITE WITHIN 14 DAYS FROM WHEN ACTIVITIES CEASED (E.G. THE TOTAL TIME PERIOD THAT CONSTRUCTION ACTIVITY IS TEMPORARILY HALTED IS LESS THAN 14 DAYS), THEN STABILIZATION MEASURES ARE NOT REQUIRED TO BE INITIATED ON THAT PORTION OF THE SITE BY THE SEVENTH DAY AFTER CONSTRUCTION ACTIVITIES HAVE TEMPORARILY CEASED.

19. AREAS WHERE THE SEED HAS FAILED TO GERMINATE ADEQUATELY (UNIFORM PERENNIAL VEGETATIVE COVER WITH A DENSITY OF 70%) WITHIN 30 DAYS AFTER SEEDING AND MULCHING MUST BE RE-SEEDED IMMEDIATELY, OR AS SOON AS WEATHER CONDITIONS ALLOW.

20. THE CONTRACTOR SHALL PROVIDE TEMPORARY EROSION AND SEDIMENT CONTROL MEASURES AND OTHER ACTIONS AS REQUIRED BY LOCAL AND STATE REGULATIONS OR REQUESTED BY ENGINEER. THE CONTRACTOR WILL BE RESPONSIBLE FOR MAINTAINING OR MODIFYING SEDIMENT CONTROL MEASURES DURING CONSTRUCTION IN ORDER TO PREVENT EROSION.

21. EROSION AND SEDIMENT CONTROL DETAILS NOT SHOWN IN THE PLANS SHALL BE IN ACCORDANCE WITH THE WEST VIRGINIA DEPARTMENT OF ENVIRONMENTAL PROTECTION AGENCY BMP MANUAL

22. THE CONTRACTOR SHALL INSTALL BARRICADES THAT ALLOW AIRCRAFT PASSAGE AROUND EACH INDIVIDUAL WORK AREA. BARRICADES MUST BE WEIGHTED BY EITHER SAND OR WATER AND SHALL NOT OBSTRUCT AIRCRAFT MOVEMENT.

23. WORK AREAS MUST BE SWEPT CLEAN AT THE END OF EACH WORKING DAY.

24. ALL EXCESS MATERIAL NOT BE KEPT ONSITE AND STOCKPILED AND SEEDED AND MULCHED IN DIRECT AREA BY OWNER.

25. THE CONTRACTOR IS RESPONSIBLE FOR INSPECTION AND MATERIAL TESTING FOR THE PROJECT.

QUANTITIES

QUANTITIES

ITEM NUMBER	DESCRIPTION	UNIT	QUANTITY
01	MOBILIZATION	LS	1
02	SILT FENCE	LF	700
03	INLET PROTECTION	EA	2
04	COLD MILLING	SY	720
05	REGRADING OF EDGES	LS	1
06	UNDERCUT	CY	200
07	P-209 CRUSHED AGGREGATE BASE COURSE	SY	4,000
08	P-501 CEMENT CONCRETE PAVEMENT	SY	4,000
09	p-401 ASPHALT MIX PAVEMENT	TN	90
10	P-605 JOINT SEALANT FOR PAVEMENTS	LF	8,000
11	SLOPEWALL FOR UNDERDRAIN	EA	2
12	4" UNDERDRAIN	LF	470
13	4" SOLID PIPE	LF	162
14	PAVEMENT MARKINGS	LS	1
15	LOWER EXISTING INLET	EA	1
16	GROUNDING ROD	EA	6
17	LOW PROFILE BARRICADES	LS	1

ADDITIVE ALTERNATE #1

ITEM NUMBER	DESCRIPTION	UNIT	QUANTITY
18	P-209 CRUSHED AGGREGATE BASE COURSE	SY	1,605
19	P-501 CEMENT CONCRETE PAVEMENT	SY	1,605
20	P-605 JOINT SEALANT FOR PAVEMENTS	LF	2,600

ADDITIVE ALTERNATE #2

ITEM NUMBER	DESCRIPTION	UNIT	QUANTITY
21	P-209 CRUSHED AGGREGATE BASE COURSE	SY	1,605
22	P-501 CEMENT CONCRETE PAVEMENT	SY	1,605
23	P-605 JOINT SEALANT FOR PAVEMENTS	LF	2,600
24	GROUNDING POINTS	EA	1

LEGEND

- EXISTING CONCRETE JOINTS
- 940 — EXISTING CONTOURS MAJOR / MINOR
- 940 — PROPOSED CONTOURS MAJOR / MINOR
- PROPOSED CONCRETE SLAB REPLACEMENT
- PROPOSED CONCRETE SLAB REPLACEMENT ADD ALT 1
- PROPOSED CONCRETE SLAB REPLACEMENT ADD ALT 2
- PROPOSED SEALANT REPLACEMENT
- PROPOSED SEALANT REPLACEMENT ADD ALT 1
- PROPOSED SEALANT REPLACEMENT ADD ALT 2
- PROPOSED 4" UNDERDRAIN
- PROPOSED 4" SOLID OUTLET PIPE
- SF — PROPOSED SILT FENCE
- GROUNDING POINTS
- C — C — PROPOSED CUT LIMITS
- PROPOSED DITCH LINE
- PROPOSED PAVEMENT MARKINGS

THRASHER
THE THRASHER GROUP INC.
600 WHITE OAKS BLVD,
P.O.BOX 940
BRIDGEPORT, WV 26330
P (304) 624-4108
F (304) 624-7831
www.thethrashergroup.com

THE INFORMATION CONTAINED HEREIN IS THE SOLE PROPERTY OF THE THRASHER GROUP, INC. REPRODUCTION OF THESE DOCUMENTS IN WHOLE, OR IN PART FOR ANY REASON WITHOUT PRIOR WRITTEN PERMISSION IS STRICTLY PROHIBITED.

COPYRIGHT © 2026
THE THRASHER GROUP, INC.

NO.	BY	DATE	DESCRIPTION

WHEELING - AASF2
TAXIWAY REPAIRS
WEST VIRIGNIA ARMY NATIONAL GUARD
OHIO COUNTY, WEST VIRIGNIA

DRAWN: DATE:
CHECKED: DATE:
APPROVED: DATE:

PROJECT No.
T80-11612

GENERAL NOTES AND QUANTITIES

SHEET No.
C1.00

CAD FILE: R:\080\T80-11612.00 - WVANG - Wheeling AASF2 Taxiway Repair\Drawing\T80-11612.00 General Notes.dwg PLOT DATE/TIME: 7/6/2026 11:09 AM LAYOUT: Layout2 USER: nicole.price

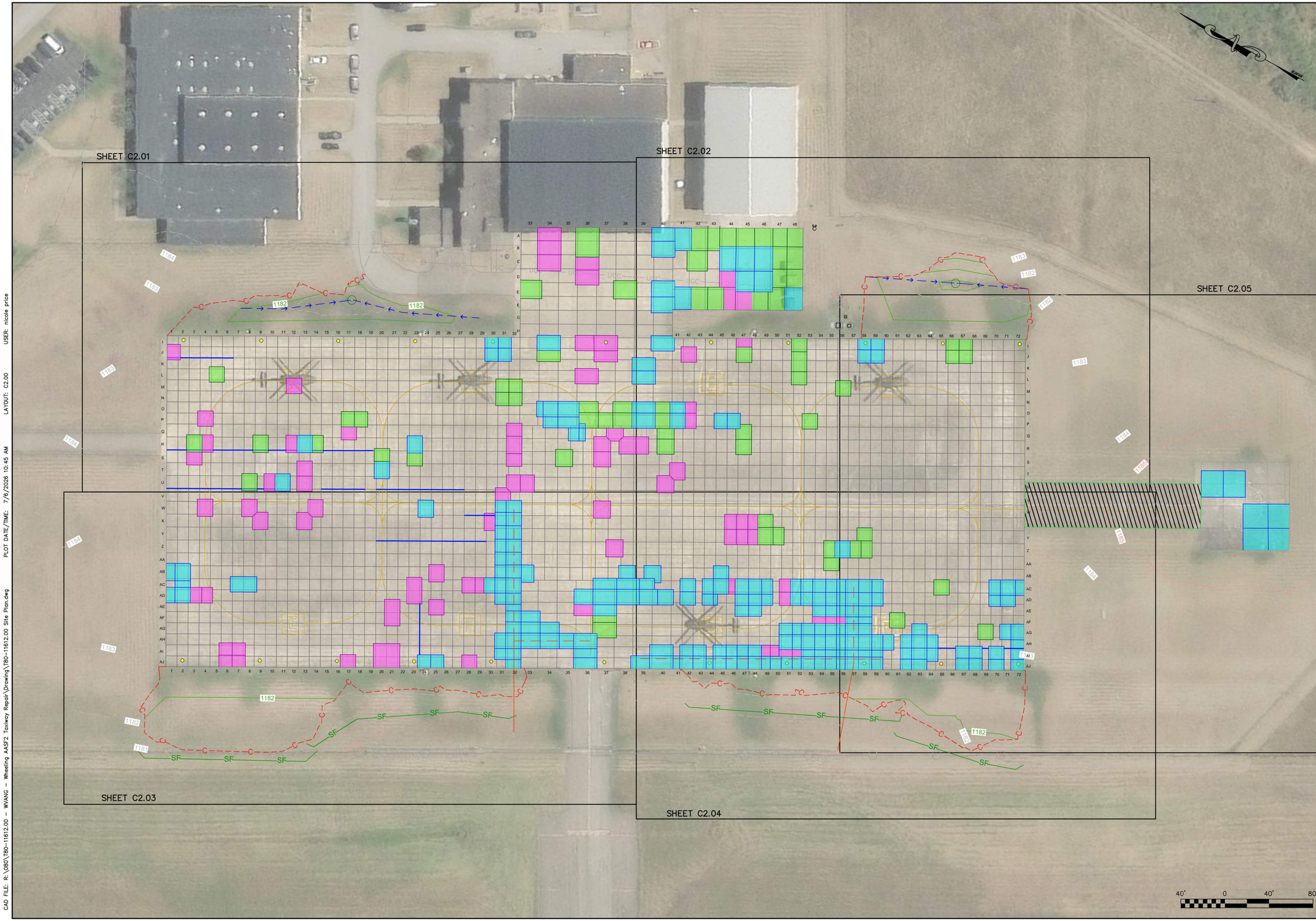

THRASHER
THE THRASHER GROUP INC.
600 WHITE OAKS BLVD,
P.O. BOX 940
BRIDGEPORT, WV 26330

P (304) 624-4108
F (304) 624-7831

www.thethrashergroup.com

THE INFORMATION CONTAINED HEREIN IS THE SOLE PROPERTY OF THE THRASHER GROUP, INC. REPRODUCTION OF THESE DOCUMENTS IN WHOLE, OR IN PART FOR ANY REASON WITHOUT PRIOR WRITTEN PERMISSION IS STRICTLY PROHIBITED.

COPYRIGHT © 2026
THE THRASHER GROUP, INC.

NO.	BY	DATE	DESCRIPTION

WHEELING - AASF2
TAXIWAY REPAIRS
WEST VIRIGNIA ARMY NATIONAL GUARD
OHIO COUNTY, WEST VIRIGNIA

DRAWN: DATE:
CHECKED: DATE:
APPROVED: DATE:

PROJECT No.
T80-11612

OVERALL SITE PLAN

SHEET No.
C2.00

CAD FILE: R:\080\T80-11612.00 - WVANG - Wheeling AASF2 Taxiway Repair\Drawing\T80-11612.00 Site Plan.dwg PLOT DATE/TIME: 7/6/2026 10:45 AM LAYOUT: C2.00 USER: nicole price

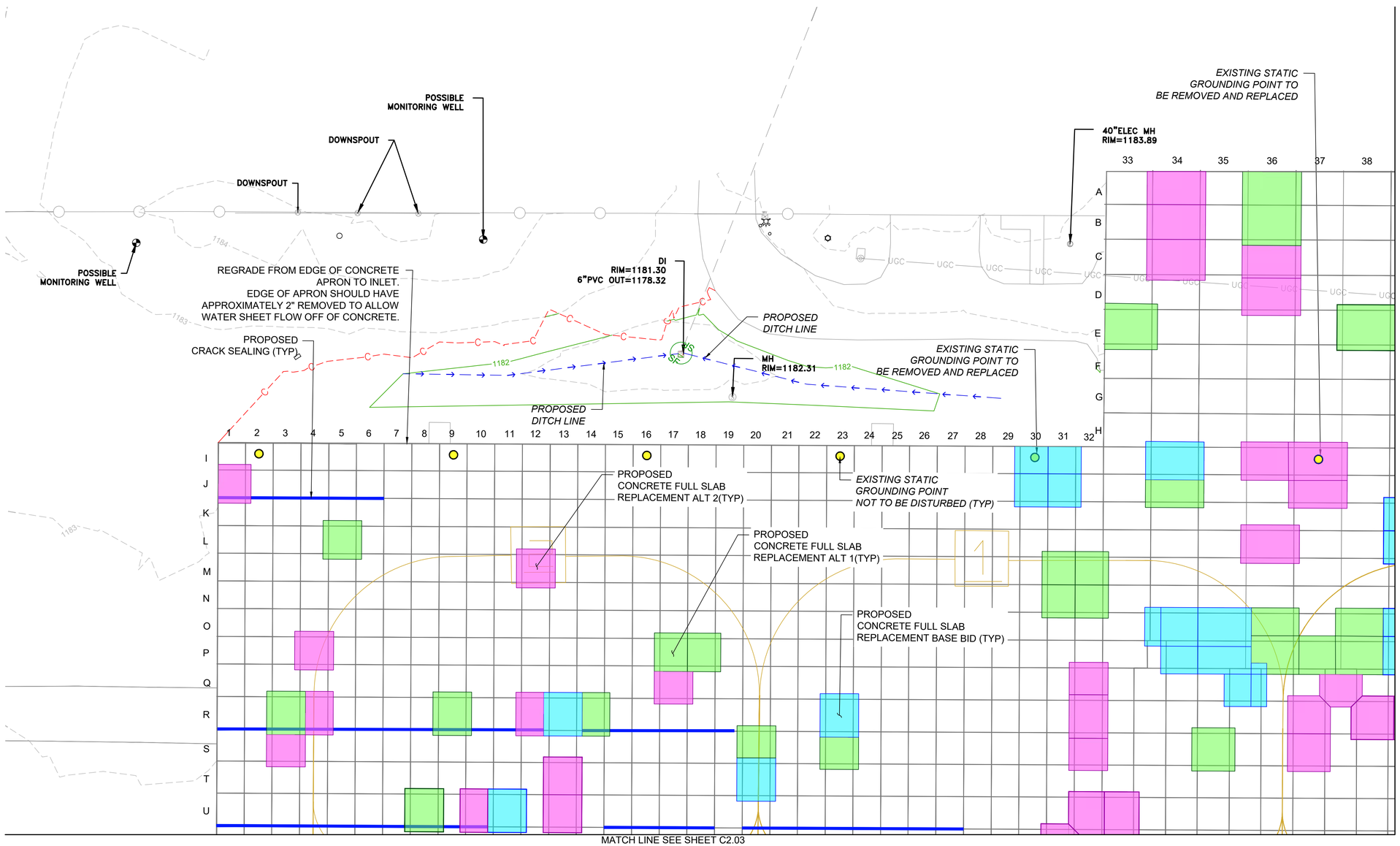

NOTE:

1. CONCRETE SLABS THAT HAVE AN GROUNDING POINT THAT ARE TO BE REMOVED SHOULD BE REPLACED. ANY SLABS THAT HAVE TIE-DOWNS, THESE SHOULD REMAIN IN AND PLACE AND NEW CONCRETE POURED AROUND.
2. CONCRETE SHOWN FOR REMOVAL INCLUDES 2' BEYOND JOINT TO GET PAST EXISTING DOWEL BARS.
3. ALL CONCRETE CAN BE REMOVED OFFSITE. ANY EXCESS MATERIAL SHOULD REMAIN ONSITE AND STOCKPILED IN AREAS DESIGNATED BY OWNER.
4. WORK AREAS SHOULD BE CLOSED TO AIRCRAFT/HELICOPTERS AND SHOULD BE DELINEATED CLOSED WITH LOW PROFILE BARRICADES.

20' 0 20' 40'

THRASHER
THE THRASHER GROUP INC.
600 WHITE OAKS BLVD,
P.O. BOX 940
BRIDGEPORT, WV 26330
P (304) 624-4108
F (304) 624-7831
www.thethrashergroup.com

THE INFORMATION CONTAINED HEREIN IS THE SOLE PROPERTY OF THE THRASHER GROUP, INC. REPRODUCTION OF THESE DOCUMENTS IN WHOLE, OR IN PART FOR ANY REASON WITHOUT PRIOR WRITTEN PERMISSION IS STRICTLY PROHIBITED.
COPYRIGHT © 2026
THE THRASHER GROUP, INC.

NO.	BY	DATE	DESCRIPTION

WHEELING - AASF2
TAXIWAY REPAIRS
WEST VIRIGNIA ARMY NATIONAL GUARD
OHIO COUNTY, WEST VIRIGNIA

DRAWN: DATE:
CHECKED: DATE:
APPROVED: DATE:

PROJECT No.
T80-11612

SITE PLAN

SHEET No.
C2.01

CAD FILE: R:\080\T80-11612.00 - WVANG - Wheeling AASF2 Taxiway Repair\Drawing\T80-11612.00 Site Plan.dwg
PLOT DATE/TIME: 7/6/2026 10:49 AM
LAYOUT: C2.01
USER: nicole price

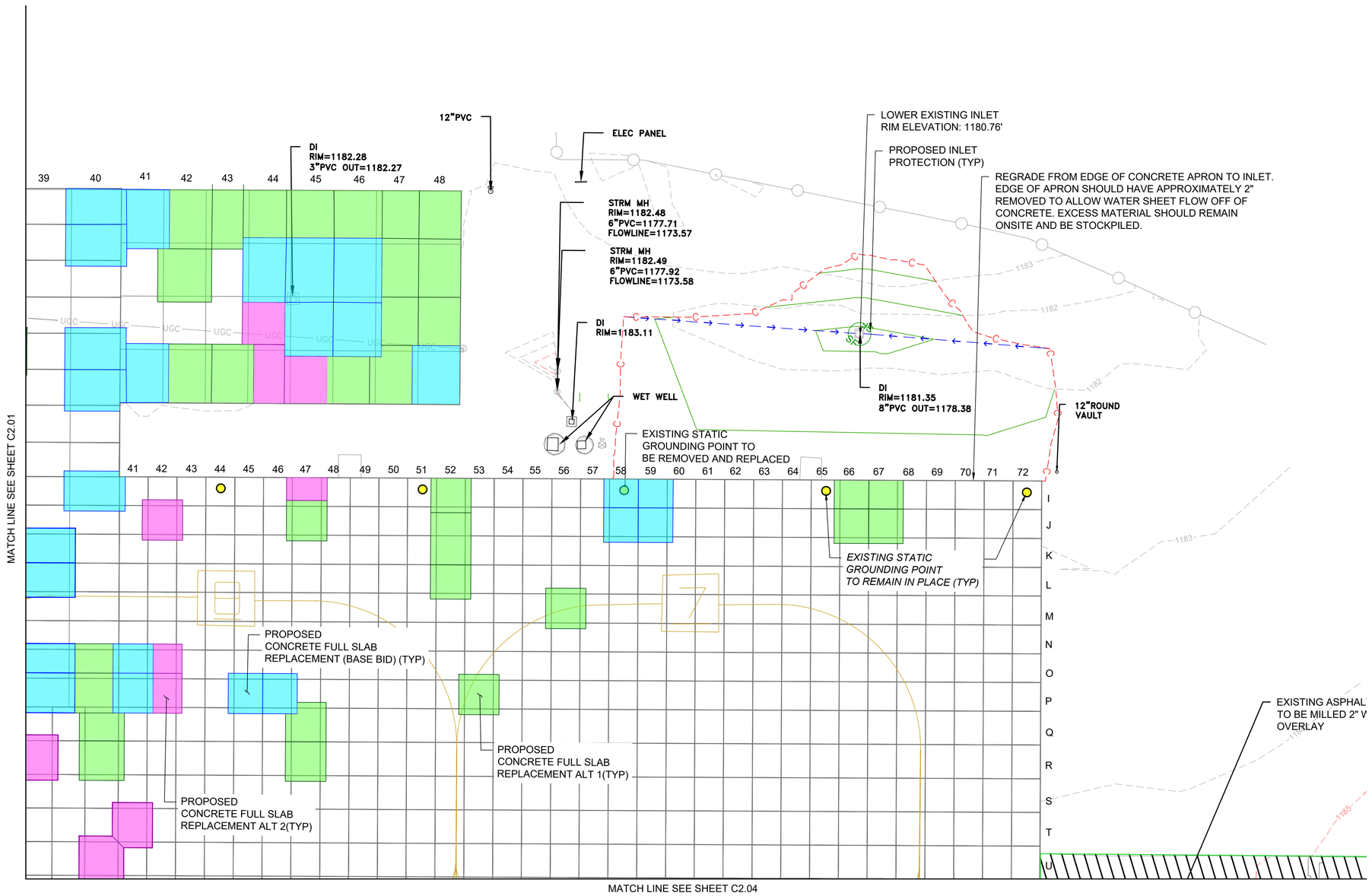

NOTE:

1. CONCRETE SLABS THAT HAVE AN GROUNDING POINT THAT ARE TO BE REMOVED SHOULD BE REPLACED. ANY SLABS THAT HAVE TIE-DOWNS, THESE SHOULD REMAIN IN AND PLACE AND NEW CONCRETE POURED AROUND.
2. CONCRETE SHOWN FOR REMOVAL INCLUDES 2' BEYOND JOINT TO GET PAST EXISTING DOWEL BARS.
3. ALL CONCRETE CAN BE REMOVED OFFSITE. ANY EXCESS MATERIAL SHOULD REMAIN ONSITE AND STOCKPILED IN AREAS DESIGNATED BY OWNER.
4. WORK AREAS SHOULD BE CLOSED TO AIRCRAFT/HELICOPTERS AND SHOULD BE DELINEATED CLOSED WITH LOW PROFILE BARRICADES.

20' 0 20' 40'

THRASHER
THE THRASHER GROUP INC.
600 WHITE OAKS BLVD,
P.O. BOX 940
BRIDGEPORT, WV 26330

P (304) 624-4108
F (304) 624-7831

www.thethrashergroup.com

THE INFORMATION CONTAINED HEREIN IS THE SOLE PROPERTY OF THE THRASHER GROUP, INC. REPRODUCTION OF THESE DOCUMENTS IN WHOLE, OR IN PART FOR ANY REASON WITHOUT PRIOR WRITTEN PERMISSION IS STRICTLY PROHIBITED.

COPYRIGHT © 2026
THE THRASHER GROUP, INC.

NO.	BY	DATE	DESCRIPTION

WHEELING - AASF2
TAXIWAY REPAIRS
WEST VIRIGNIA ARMY NATIONAL GUARD
OHIO COUNTY, WEST VIRIGNIA

DRAWN: DATE:
CHECKED: DATE:
APPROVED: DATE:

PROJECT No.
T80-11612

SITE PLAN

SHEET No.
C2.02

CAD FILE: R:\080\T80-11612.00 – WVANG – Wheeling AASF2 Taxiway Repair\Drawing\T80-11612.00 Site Plan.dwg PLOT DATE/TIME: 7/6/2026 10:50 AM LAYOUT: C2.02 USER: nicole price

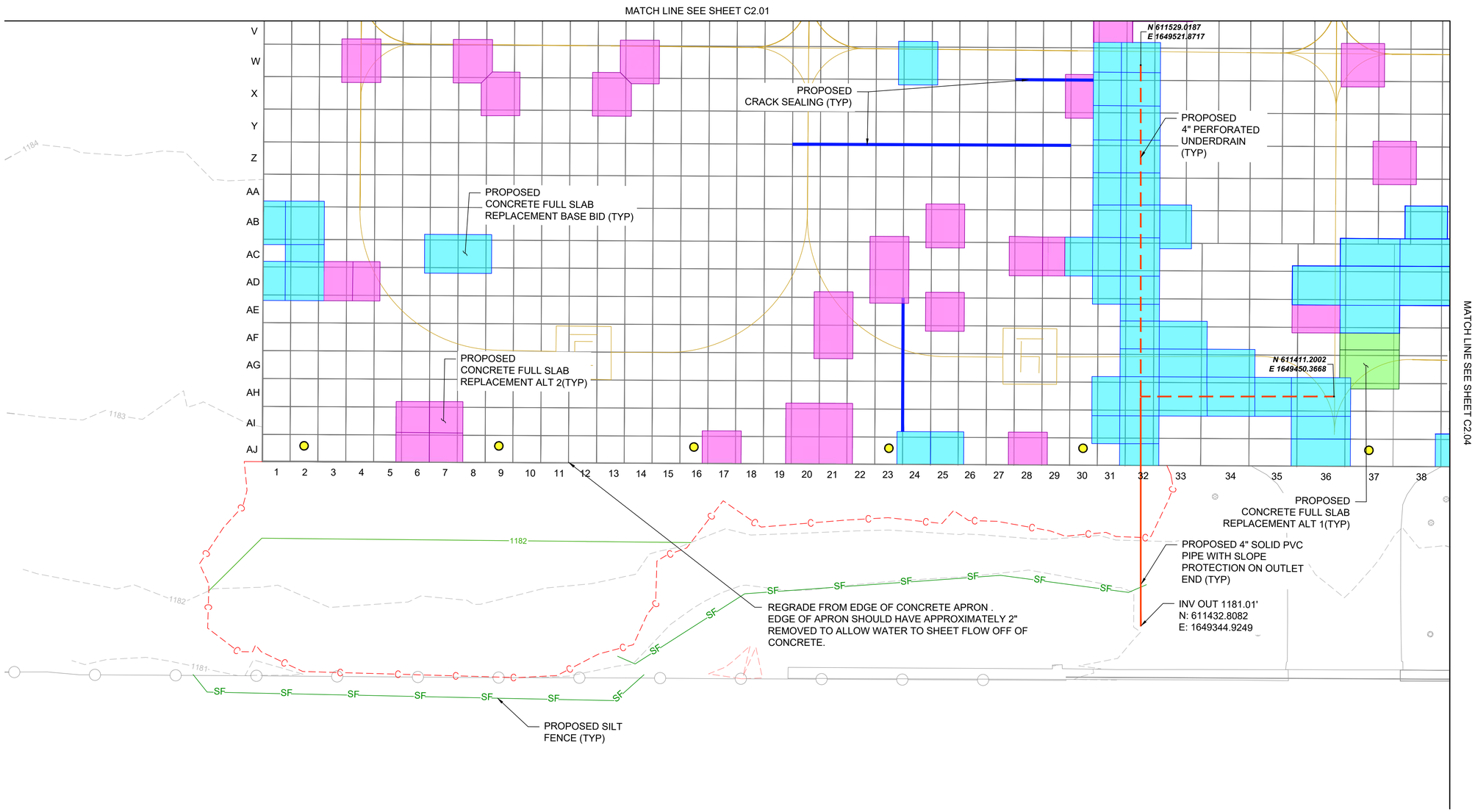

NOTE:

1. CONCRETE SLABS THAT HAVE AN GROUNDING POINT THAT ARE TO BE REMOVED SHOULD BE REPLACED. ANY SLABS THAT HAVE TIE-DOWNS, THESE SHOULD REMAIN IN AND PLACE AND NEW CONCRETE POURED AROUND.
2. CONCRETE SHOWN FOR REMOVAL INCLUDES 2' BEYOND JOINT TO GET PAST EXISTING DOWEL BARS.
3. ALL CONCRETE CAN BE REMOVED OFFSITE. ANY EXCESS MATERIAL SHOULD REMAIN ONSITE AND STOCKPILED IN AREAS DESIGNATED BY OWNER.
4. WORK AREAS SHOULD BE CLOSED TO AIRCRAFT/HELICOPTERS AND SHOULD BE DELINEATED CLOSED WITH LOW PROFILE BARRICADES.

20' 0 20' 40'

THRASHER
THE THRASHER GROUP INC.
600 WHITE OAKS BLVD,
P.O. BOX 940
BRIDGEPORT, WV 26330
P (304) 624-4108
F (304) 624-7831
www.thethrashergroup.com

THE INFORMATION CONTAINED HEREIN IS THE SOLE PROPERTY OF THE THRASHER GROUP, INC. REPRODUCTION OF THESE DOCUMENTS IN WHOLE, OR IN PART FOR ANY REASON WITHOUT PRIOR WRITTEN PERMISSION IS STRICTLY PROHIBITED.

COPYRIGHT © 2026
THE THRASHER GROUP, INC.

NO.	BY	DATE	DESCRIPTION

WHEELING - AASF2
TAXIWAY REPAIRS
WEST VIRIGNIA ARMY NATIONAL GUARD
OHIO COUNTY, WEST VIRIGNIA

DRAWN: DATE:
CHECKED: DATE:
APPROVED: DATE:

PROJECT No.
T80-11612

SITE PLAN

SHEET No.
C2.03

CAD FILE: R:\080\T80-11612.00 – WVANG – Wheeling AASF2 Taxiway Repair\Drawing\T80-11612.00 Site Plan.dwg
PLOT DATE/TIME: 7/6/2026 10:51 AM
LAYOUT: C2.03
USER: nicole price

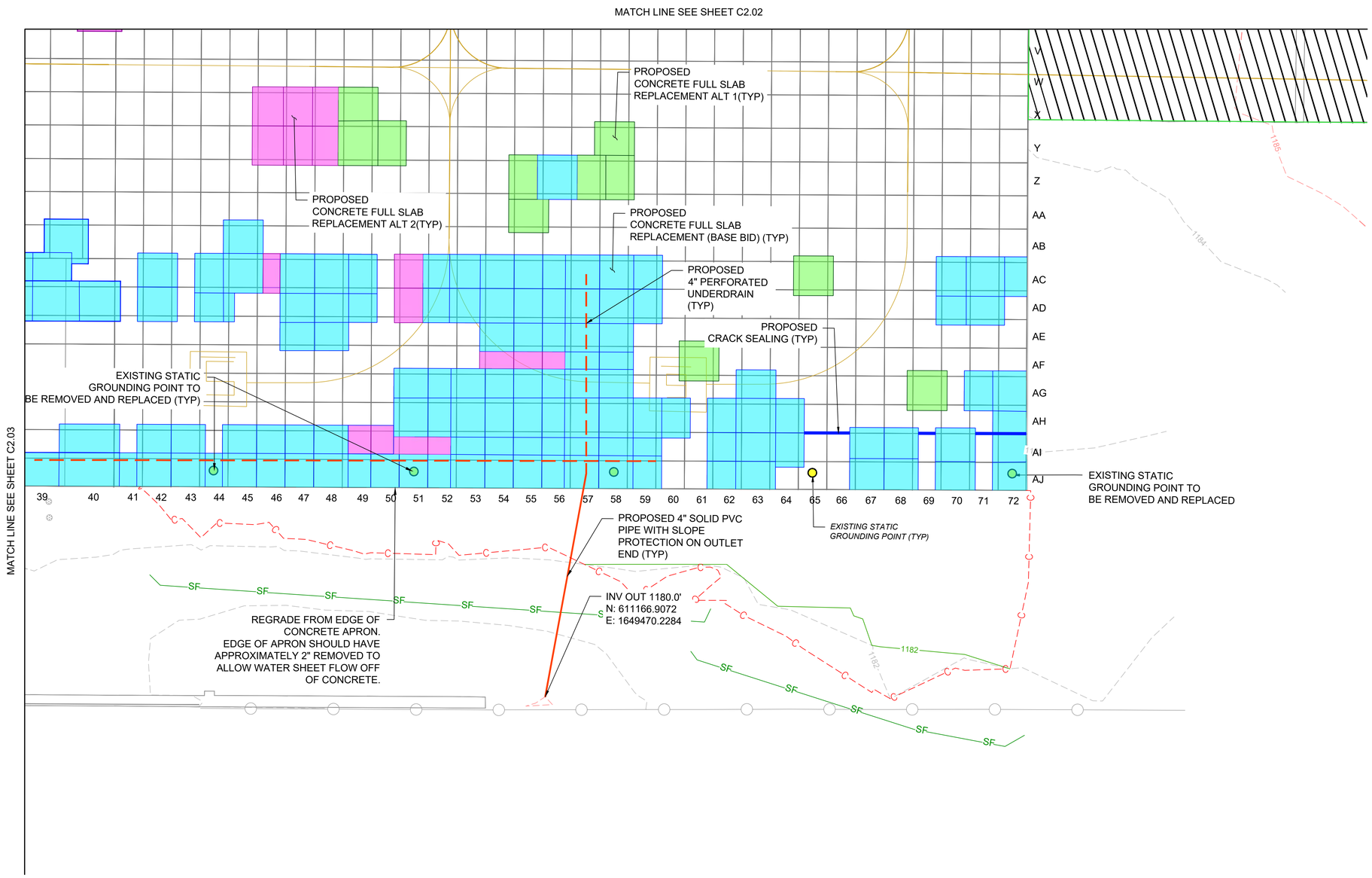

NOTE:

1. CONCRETE SLABS THAT HAVE AN GROUNDING POINT THAT ARE TO BE REMOVED SHOULD BE REPLACED. ANY SLABS THAT HAVE TIE-DOWNS, THESE SHOULD REMAIN IN AND PLACE AND NEW CONCRETE POURED AROUND.
2. CONCRETE SHOWN FOR REMOVAL INCLUDES 2' BEYOND JOINT TO GET PAST EXISTING DOWEL BARS.
3. ALL CONCRETE CAN BE REMOVED OFFSITE. ANY EXCESS MATERIAL SHOULD REMAIN ONSITE AND STOCKPILED IN AREAS DESIGNATED BY OWNER.
4. WORK AREAS SHOULD BE CLOSED TO AIRCRAFT/HELICOPTERS AND SHOULD BE DELINEATED CLOSED WITH LOW PROFILE BARRICADES.

20' 0 20' 40'

THRASHER
THE THRASHER GROUP INC.
600 WHITE OAKS BLVD,
P.O. BOX 940
BRIDGEPORT, WV 26330

P (304) 624-4108
F (304) 624-7831

www.thethrashergroup.com

THE INFORMATION CONTAINED HEREIN IS THE SOLE PROPERTY OF THE THRASHER GROUP, INC. REPRODUCTION OF THESE DOCUMENTS IN WHOLE, OR IN PART FOR ANY REASON WITHOUT PRIOR WRITTEN PERMISSION IS STRICTLY PROHIBITED.

COPYRIGHT © 2026
THE THRASHER GROUP, INC.

NO.	BY	DATE	DESCRIPTION

WHEELING - AASF2
TAXIWAY REPAIRS
WEST VIRIGNIA ARMY NATIONAL GUARD
OHIO COUNTY, WEST VIRIGNIA

DRAWN: DATE:
CHECKED: DATE:
APPROVED: DATE:

PROJECT No.
T80-11612

SITE PLAN

SHEET No.
C2.04

CAD FILE: R:\080\T80-11612.00 - WVANG - Wheeling AASF2 Taxiway Repair\Drawing\T80-11612.00 Site Plan.dwg PLOT DATE/TIME: 7/6/2026 10:54 AM LAYOUT: C2.04 USER: nicole price

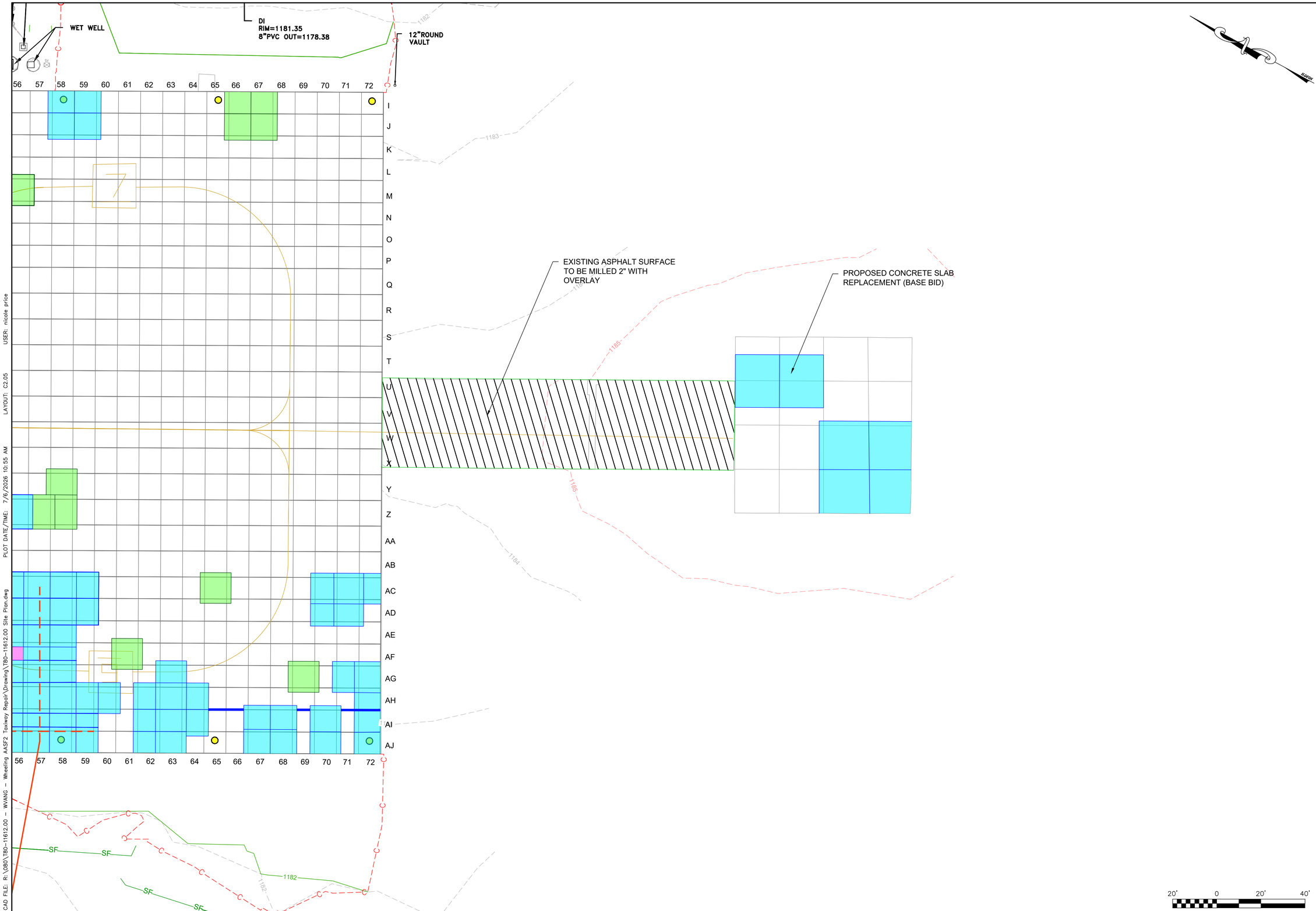

THRASHER
THE THRASHER GROUP INC.
600 WHITE OAKS BLVD,
P.O. BOX 940
BRIDGEPORT, WV 26330

P (304) 624-4108
F (304) 624-7831

www.thethrashergroup.com

THE INFORMATION CONTAINED HEREIN IS THE SOLE PROPERTY OF THE THRASHER GROUP, INC. REPRODUCTION OF THESE DOCUMENTS IN WHOLE, OR IN PART FOR ANY REASON WITHOUT PRIOR WRITTEN PERMISSION IS STRICTLY PROHIBITED.

COPYRIGHT © 2026
THE THRASHER GROUP, INC.

NO.	BY	DATE	DESCRIPTION

WHEELING - AASF2
TAXIWAY REPAIRS
WEST VIRIGNIA ARMY NATIONAL GUARD
OHIO COUNTY, WEST VIRIGNIA

DRAWN: DATE:
CHECKED: DATE:
APPROVED: DATE:

PROJECT No.
T80-11612

SITE PLAN

SHEET No.
C2.05

CAD FILE: R:\080\T80-11612.00 – WVANG – Wheeling AASF2 Taxiway Repair\Drawing\T80-11612.00 Site Plan.dwg
PLOT DATE/TIME: 7/6/2026 10:55 AM
LAYOUT: C2.05
USER: nicole price

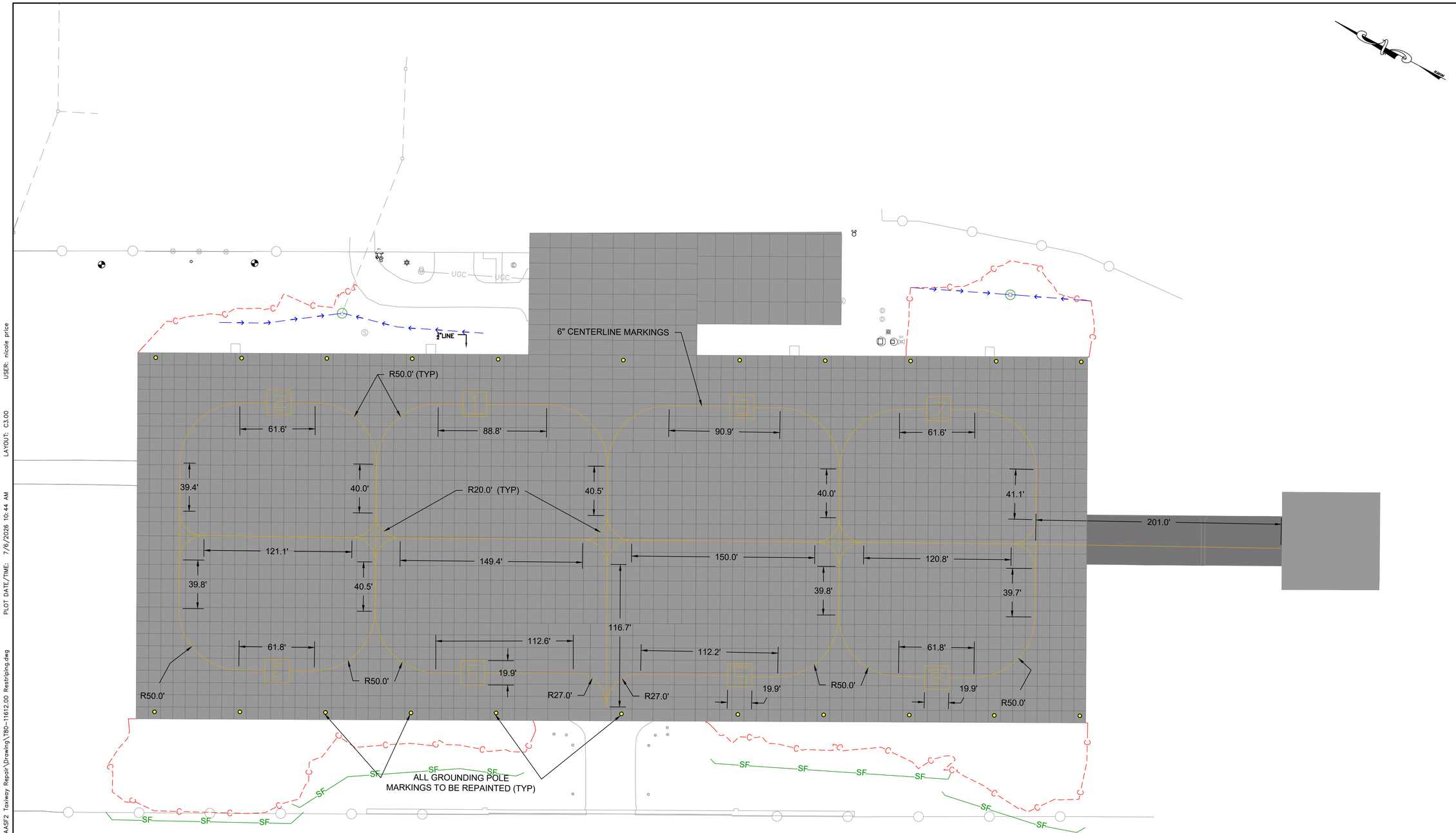

NOTE: ENTIRE APRON TO BE RESTRIPED IN BASE BID REGARDLESS OF CONCRETE THAT IS REPLACED.

40' 0 40' 80'

THRASHER
THE THRASHER GROUP INC.
600 WHITE OAKS BLVD,
P.O. BOX 940
BRIDGEPORT, WV 26330

P (304) 624-4108
F (304) 624-7831

www.thethrashergroup.com

THE INFORMATION CONTAINED HEREIN IS THE SOLE PROPERTY OF THE THRASHER GROUP, INC. REPRODUCTION OF THESE DOCUMENTS IN WHOLE, OR IN PART FOR ANY REASON WITHOUT PRIOR WRITTEN PERMISSION IS STRICTLY PROHIBITED.

COPYRIGHT © 2026
THE THRASHER GROUP, INC.

NO.	BY	DATE	DESCRIPTION

WHEELING - AASF2
TAXIWAY REPAIRS
WEST VIRIGNIA ARMY NATIONAL GUARD
OHIO COUNTY, WEST VIRIGNIA

DRAWN: DATE:
CHECKED: DATE:
APPROVED: DATE:

PROJECT No.
T80-11612

PAVEMENT MARKING PLAN

SHEET No.
C3.00

CAD FILE: R:\080\T80-11612.00 - WVANG - Wheeling AASF2 Taxiway Repair\Drawing\T80-11612.00 Restriping.dwg
PLOT DATE/TIME: 7/6/2026 10:44 AM
LAYOUT: C3.00
USER: nicole.price

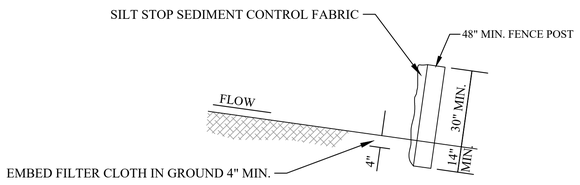

SECTION VIEW

NOTE:

1. SET SILT FENCE PARALLEL TO THE CONTOURS AT ALL POINTS ALONG ITS LENGTH

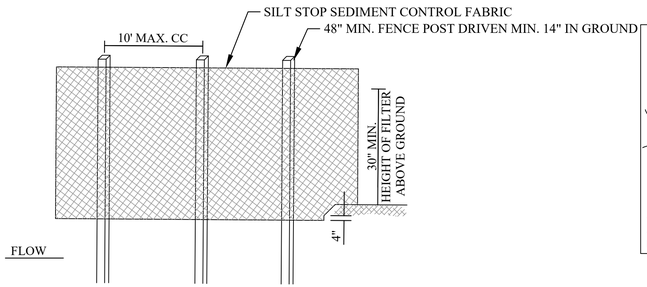

PERSPECTIVE VIEW

SILT FENCE

NOT TO SCALE

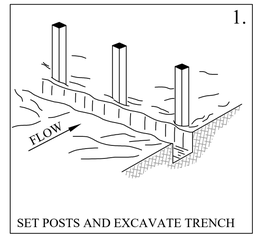

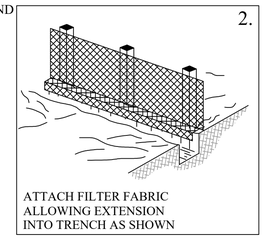

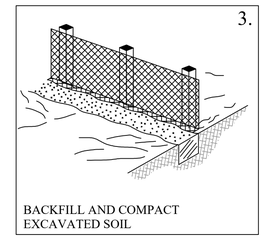

BUILDING SILT FENCE - STEP BY STEP PROCEDURE

NOT TO SCALE

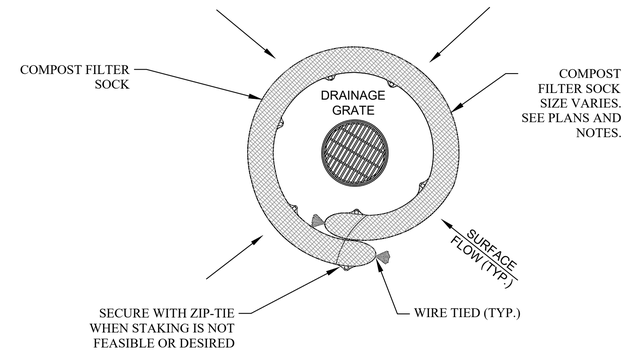

DROP INLET PLAN

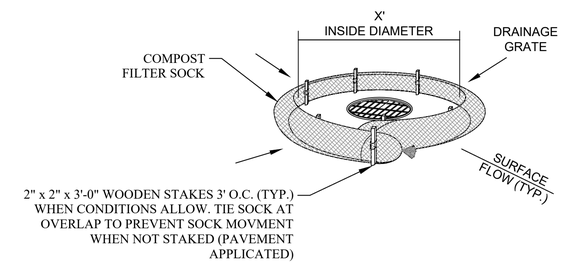

DROP INLET PERSPECTIVE VIEW

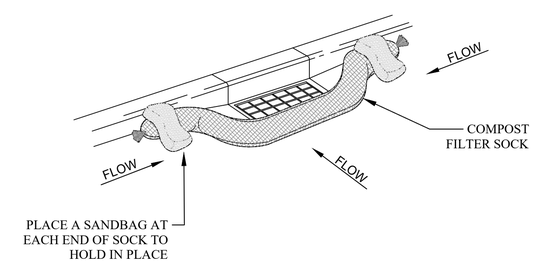

CURB INLET PERSPECTIVE VIEW

NOTES:

1. ANCHORING STAKES SHALL BE SIZED, SPACED, AND BE OF A MATERIAL THAT EFFECTIVELY SECURES THE FILTER SOCK. STAKE SPACING SHALL BE A MAXIMUM OF THREE FEET.
2. OVERLAP ENDS OF SOCK PER MANUFACTURERS RECOMMENDATIONS. (1' MIN. 3' MAX.)
3. USE 8" - 12" DIA. SOCK ON CURBSIDE IN TRAFFIC AREAS.
4. USE 12" - 18" DIA. SOCK IN NON-TRAFFIC AREAS WHERE SAFETY IS NOT A CONCERN.
5. INSPECT COMPOST FILTER SOCK(S) AT LEAST ONCE A WEEK AND AFTER EACH RAIN EVENT GREATER THAN 0.5 INCHES.
6. REPAIR OR REPLACE SPLIT, TORN, RAVELING, OR SLUMPING COMPOST FILTER SOCKS.
7. REMOVE SEDIMENT ACCUMULATIONS WHEN EXCEEDING 1/2 THE HEIGHT BETWEEN THE TOP OF THE COMPOST FILTER SOCK AND THE GROUND SURFACE.
8. REPAIR ANY RILLS OR GULLIES PROMPTLY.
9. RESEED OR REPLANT VEGETATION IF NECESSARY UNTIL THE SLOPE IS STABILIZED.

COMPOST FILTER SOCK INLET PROTECTION

NOT TO SCALE

NOTES:

1. THE CONTRACTOR SHALL FURNISH, INSTALL, SECURE AND MAINTAIN THE BARRICADES FOR THE DURATION OF THE PROJECTS COMPLETION.
2. THE CONTRACTOR SHALL ENSURE THE LIGHTS, BATTERY, AND PHOTOCELL ARE IN WORKING ORDER PRIOR TO LEAVING THE SITE EVERY NIGHT. CONTRACTOR SHALL ENSURE THAT BARRICADES CONFORM TO THE LATEST ADVISORY CIRCULAR AND ARE FILLED WITH WATER OR SAND PRIOR TO MOVEMENT.
3. BARRICADES SHALL BE LOCATED AS DEFINED IN THE CONSTRUCTION SAFETY AND PHASING PLAN (CSPP) WITH A MAXIMUM SPACING OF 16' O.C. OR AS DIRECTED BY THE ENGINEER.
4. CONTRACTOR SHALL REPLACE ANY DAMAGED LOW PROFILE BARRICADES AT NO ADDITIONAL COST TO THE OWNER.
5. LIGHTS MUST BE RED, EITHER BY STEADY BURNING OR FLASHING, AND MUST MEET THE LUMINANCE REQUIREMENT OF THE DIVISION OF HIGHWAYS. LIGHTS MUST BE MOUNTED ON BARRICADES AND SPACED AT NO MORE THAN 10 FT. LIGHTS MUST BE OPERATED BETWEEN SUNSET AND SUNRISE AND DURING PERIODS OF LOW-VISIBILITY WHENEVER THE AIRPORT IS OPEN TO OPERATIONS. THE LIGHTS MAY BE BATTERY POWERED OR OPERATED BY PHOTOCELL, THE CONTRACTOR MAY BE REQUIRED TO RUN THEM ON MANUALLY DURING LOW-VISIBILITY SITUATIONS.

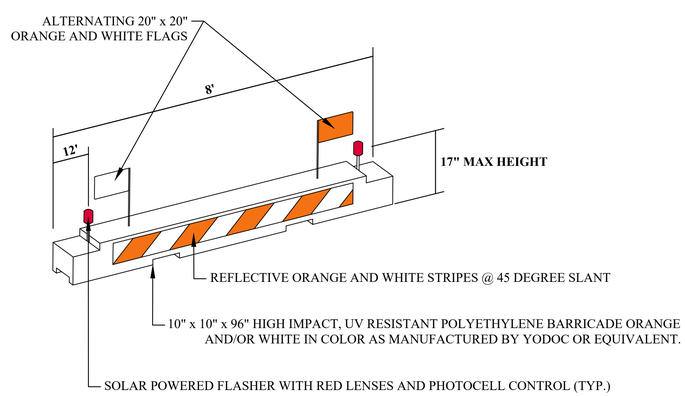

LOW PROFILE AIRCRAFT BARRICADES

NOT TO SCALE

THRASHER
THE THRASHER GROUP INC.
600 WHITE OAKS BLVD,
P.O. BOX 940
BRIDGEPORT, WV 26330
P (304) 624-4108
F (304) 624-7831
www.thethrashergroup.com

THE INFORMATION CONTAINED HEREIN IS THE SOLE PROPERTY OF THE THRASHER GROUP, INC. REPRODUCTION OF THESE DOCUMENTS IN WHOLE, OR IN PART FOR ANY REASON WITHOUT PRIOR WRITTEN PERMISSION IS STRICTLY PROHIBITED.
COPYRIGHT © 2026
THE THRASHER GROUP, INC.

NO.	BY	DATE	DESCRIPTION

WHEELING - AASF2
TAXIWAY REPAIRS
WEST VIRIGNIA ARMY NATIONAL GUARD
OHIO COUNTY, WEST VIRIGNIA

DRAWN: DATE:
CHECKED: DATE:
APPROVED: DATE:
PROJECT No. T80-11612

DETAILS

SHEET No. C4.00

CAD FILE: R:\080\T80-11612.00 - WVANG - Wheeling AASF2 Taxiway Repair\Drawing\T80-11612.00 Details.dwg PLOT DATE/TIME: 7/6/2026 11:16 AM LAYOUT: C4.00 USER: nicole price

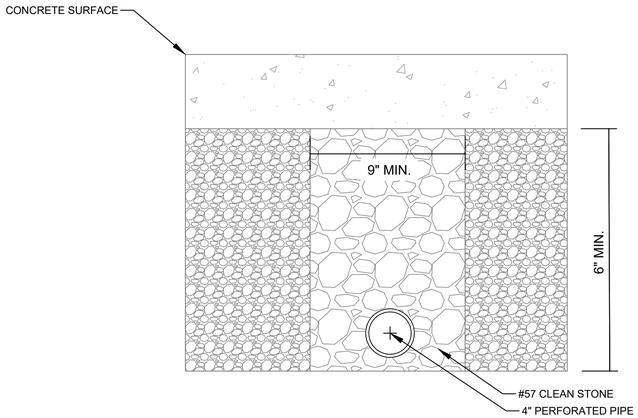

TYPICAL UNDERDRAIN
NOT TO SCALE

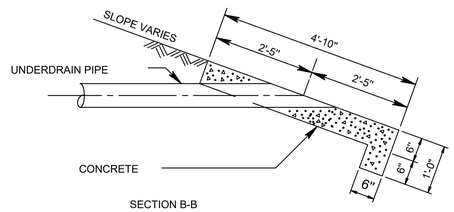

SLOPEWALL FOR UNDERDRAIN
NOT TO SCALE

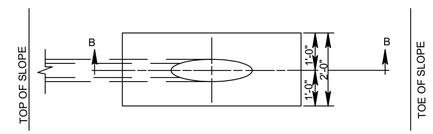

PLAN
NOT TO SCALE

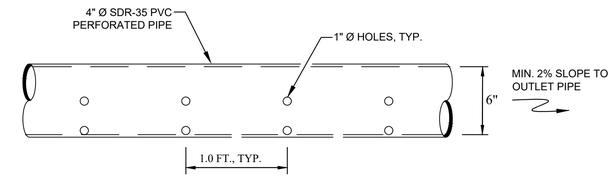

PROFILE VIEW

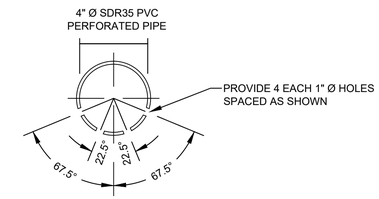

SECTION VIEW

PEFORATED UNDERDRAIN
NOT TO SCALE

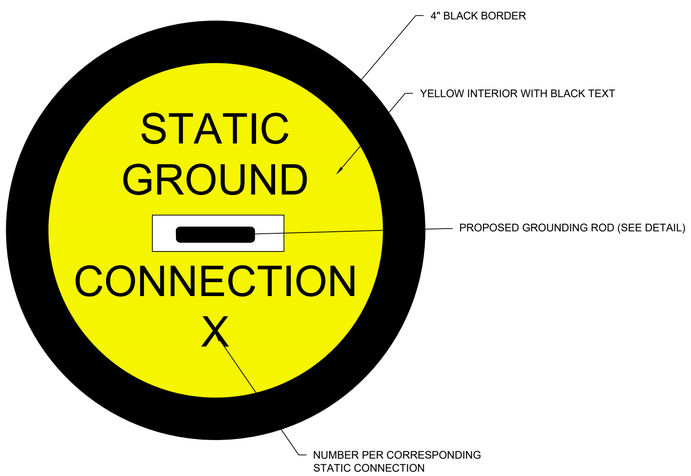

TYPICAL STATIC GROUND CONNECTION PAINTING DETAIL
NOT TO SCALE

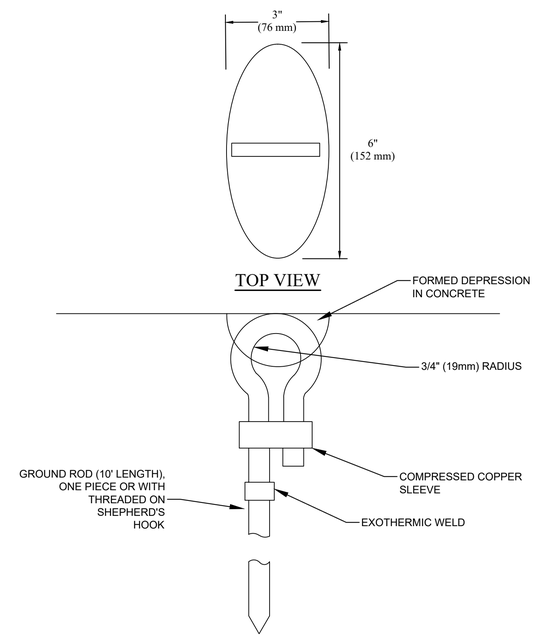

STATIC GROUNDING ROD
NOT TO SCALE

THRASHER
THE THRASHER GROUP INC.
600 WHITE OAKS BLVD,
P.O. BOX 940
BRIDGEPORT, WV 26330

P (304) 624-4108
F (304) 624-7831

www.thethrashergroup.com

THE INFORMATION CONTAINED HEREIN IS THE SOLE PROPERTY OF THE THRASHER GROUP, INC. REPRODUCTION OF THESE DOCUMENTS IN WHOLE, OR IN PART FOR ANY REASON WITHOUT PRIOR WRITTEN PERMISSION IS STRICTLY PROHIBITED.

COPYRIGHT © 2026
THE THRASHER GROUP, INC.

NO.	BY	DATE	DESCRIPTION

WHEELING - AASF2
TAXIWAY REPAIRS
WEST VIRIGNIA ARMY NATIONAL GUARD
OHIO COUNTY, WEST VIRIGNIA

DRAWN: DATE:
CHECKED: DATE:
APPROVED: DATE:

PROJECT No.
T80-11612

DETAILS

SHEET No.
C4.01

CAD FILE: R:\080\T80-11612.00 - WVANG - Wheeling AASF2 Taxiway Repair\Drawing\T80-11612.00 Details.dwg PLOT DATE/TIME: 7/6/2026 11:16 AM LAYOUT: C4.01 USER: nicole price

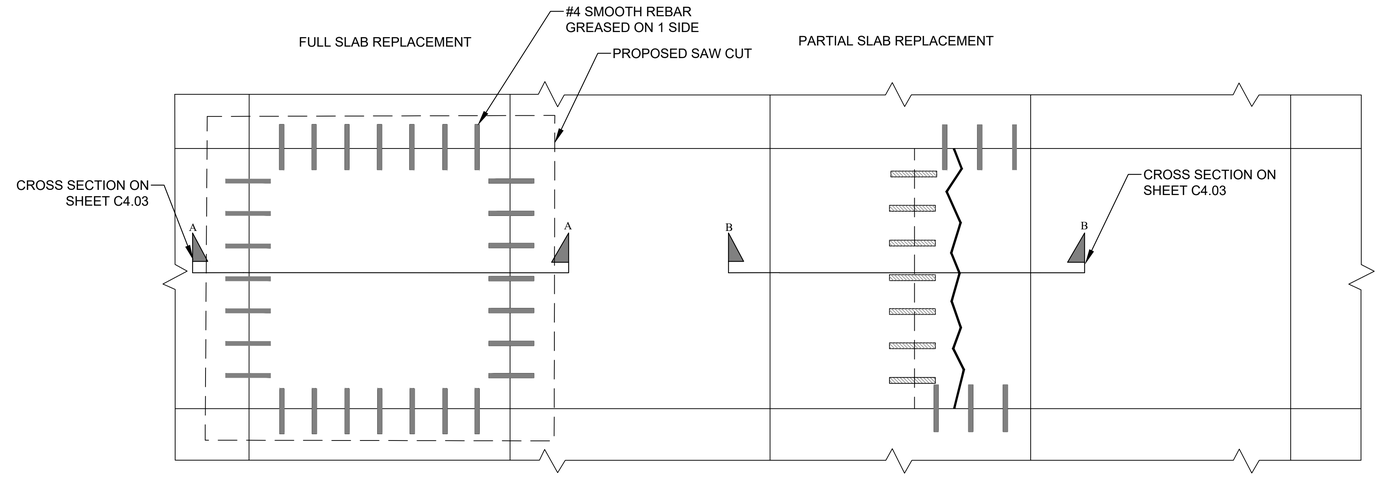

RIGID PAVEMENT REPAIR - PLAN VIEW

NOT TO SCALE

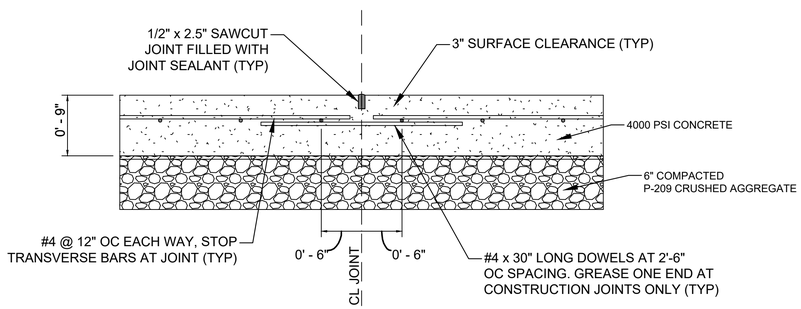

TRANSVERSSE CONTROL JOINT (T.C.J.)
LOCATE CONSTRUCTION JOINTS AT CONTROL JOINTS

NOT TO SCALE

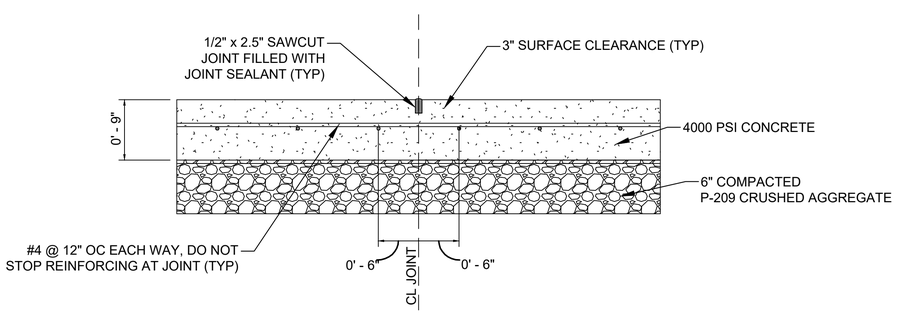

LONGITUDINAL CONTROL JOINT (L.C.J.)
LOCATE CONSTRUCTION JOINTS AT CONTROL JOINTS

NOT TO SCALE

THRASHER
THE THRASHER GROUP INC.
600 WHITE OAKS BLVD,
P.O. BOX 940
BRIDGEPORT, WV 26330

P (304) 624-4108
F (304) 624-7831

www.thethrashergroup.com

THE INFORMATION CONTAINED HEREIN IS THE SOLE PROPERTY OF THE THRASHER GROUP, INC. REPRODUCTION OF THESE DOCUMENTS IN WHOLE, OR IN PART FOR ANY REASON WITHOUT PRIOR WRITTEN PERMISSION IS STRICTLY PROHIBITED.

COPYRIGHT © 2026
THE THRASHER GROUP, INC.

NO.	BY	DATE	DESCRIPTION

WHEELING - AASF2
TAXIWAY REPAIRS
WEST VIRIGNIA ARMY NATIONAL GUARD
OHIO COUNTY, WEST VIRIGNIA

DRAWN: DATE:
CHECKED: DATE:
APPROVED: DATE:

PROJECT No.
T80-11612

DETAILS

SHEET No.
C4.02

CAD FILE: R:\080\T80-11612.00 - WVANG - Wheeling AASF2 Taxiway Repair\Drawing\T80-11612.00 Details.dwg PLOT DATE/TIME: 7/6/2026 11:57 AM LAYOUT: C4.02 USER: nicole price

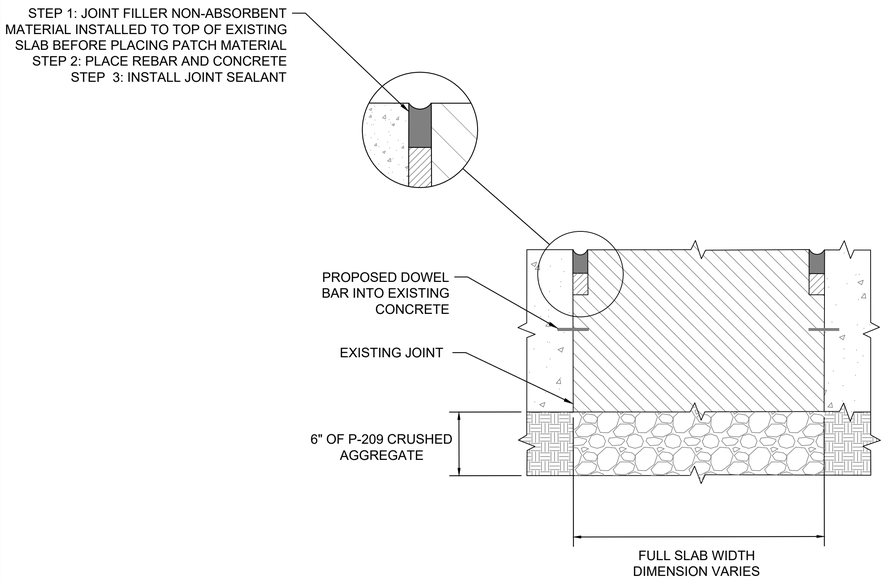

FULL DEPTH REPAIR IN RIGID PAVEMENT - FULL SLAB REPLACEMENT (SECTION A-A)
NOT TO SCALE

REPAIR PROCEDURE FOR FULL SLAB REPLACEMENT NOTES

1. ENSURE ALL PAVEMENT CLOSURES HAVE ALL REQUIRED ITEMS IN PLACE, SUCH AS BARRICADES, ETC..
2. MARK THE LIMITS OF THE AREA TO BE REPAIRED.
3. MAKE A FULL-DEPTH SAW CUT ALONG THE CONSTRUCTED JOINTS AT LEAST 2 FEET BEYOND THE LIMITS OF THE DAMAGED PAVEMENT AND MAKE A SAW CUT PERPENDICULAR TO THE CONSTRUCTED JOINTS FROM THESE POINTS ACROSS THE WIDTH OF THE PAVEMENT PANEL.
4. IF DOWELS OR TIE BARS ARE PRESENT ALONG ANY EDGES, EITHER OF THE FOLLOWING OPTIONS IS ACCEPTABLE:

- IF DOWEL OR TIE BARS WILL BE EXPOSED AND SAVED, EDGES WILL BE SAWED FULL DEPTH JUST BEYOND THE END OF THE DOWELS OR TIE BARS. CAREFULLY SAW JOINTS ON THE JOINT LINE TO WITHIN 1 INCH (2.5 CM) OF THE DEPTH OF THE DOWEL OR TIE BAR. CAREFULLY BREAK UP THE NARROW STRIPS OF CONCRETE ALONG DOWELED EDGES USING LIGHT 30 POUND (14 KG) OR LESS JACKHAMMERS, OR OTHER APPROVED EQUIPMENT.
- IF DOWELS OR TIE BARS ARE TO BE CUT AND REPLACED, MAKE A FULL DEPTH SAW CUT ALONG THE CONSTRUCTED JOINT CUTTING THE DOWELS AND TIE BARS.

5. TAKE CARE TO PREVENT DAMAGE TO THE DOWELS, TIE BARS, OR TO CONCRETE THAT REMAINS IN PLACE.
6. MAKE ADDITIONAL SAW CUTS WITHIN THE LIMITS OF THE REPAIR AREA DIVIDING THE REPAIR AREA INTO QUARTERS.
7. USE LIGHT WEIGHT EQUIPMENT, I.E., JACKHAMMERS LESS THAN 30 POUNDS (14 KG), HAND TOOLS, ETC., TO REMOVE THE DAMAGED PCC PAVEMENT. WORK FROM INSIDE THE SAW CUT TOWARD THE INTERIOR OF THE AREA BEING REMOVED TO PREVENT DAMAGE TO THE PAVEMENT REMAINING.
8. REMOVE BY HAND ALL LOOSE MATERIAL AND VACUUM TO MINIMIZE ANY DISTURBANCE TO THE SUBGRADE OR BASE MATERIALS.
9. EXCAVATE TO INSTALL 6" OF P-209 CRUSHED AGGREGATE STONE BASE.
10. INSTALL DOWELS BY DRILLING AND EPOXYING INTO THE PCC PAVEMENT AT LEAST 3 INCHES (8 CM) FROM THE LOCATION OF THE EXISTING DOWELS WHICH WERE CUT OFF. SPACE DOWEL BARS AT LEAST 3 INCHES (8 CM) FROM THE EDGE OF THE REPAIR AREA AND AT LEAST ONE BAR SPACING APART AT CORNERS OF INTERSECTING JOINTS.
11. OIL THE EXPOSED ENDS OF DOWEL BARS PRIOR TO BACKFILLING REPAIR AREA WITH CONCRETE.
12. INSTALL NONABSORBENT BOARD OR OTHER APPROVED MATERIAL WITHIN THE LIMITS OF THE JOINT SEAL RESERVOIR. THE NONABSORBENT BOARD WILL BE A STANDARD ½ INCH (13 MM) ASPHALT IMPREGNATED FIBER-BOARD. FOR JOINTS WIDER THAN ½ INCH (13 MM), ADJUST THE WIDTH OF THE NONABSORBENT BOARD TO FIT THE JOINT WIDTH.
13. FILL THE REPAIR AREA WITH CONCRETE AND CONSOLIDATE WITH A VIBRATOR. USE CONCRETE MEETING THE REQUIREMENTS OF P-501.
14. FINISH THE SURFACE TO MATCH THE EXISTING SURFACE.
15. SPRAY WITH CURING COMPOUND PER ASTM C309.
16. REMOVE THE NONABSORBENT BOARD OR OTHER APPROVED MATERIAL AND PLACE JOINT SEALANT PER ASTM D6690.
17. THOROUGHLY CLEAN THE WORK AREA BEFORE OPENING THE PAVEMENT TO AIRCRAFT TRAFFIC.
18. DO NOT ALLOW TRAFFIC UNTIL THE CONCRETE HAS CURED.
19. AFTER ALL CONCRETE HAS BEEN REPLACED TAXIWAY CENTERLINES AND PAVEMENT MARKINGS SHOULD BE RESTRIPED.

WEATHER AND TEMPERATURE REQUIREMENTS

- DO NOT BEGIN REPAIRS DURING INCLEMENT WEATHER.
- DO NOT PLACE CONCRETE UNLESS THE AMBIENT TEMPERATURE IS AT LEAST 40°F (4°C) AND RISING AND THE CONCRETE TEMPERATURE IS GREATER THAN OR EQUAL TO 50°F (10°C).
- DO NOT PLACE CONCRETE ON FROZEN BASE, ICE, OR SNOW.
- WHEN THE AMBIENT TEMPERATURE EXCEEDS 85°F (29°C), SPRINKLE THE ADJACENT CONCRETE AND BASE WITH WATER IMMEDIATELY BEFORE PLACING CONCRETE.
- PLACE CONCRETE AT THE COOLEST TEMPERATURE PRACTICABLE, AND NEVER ALLOW THE PLACED CONCRETE TEMPERATURE TO EXCEED 90°F (32°C).

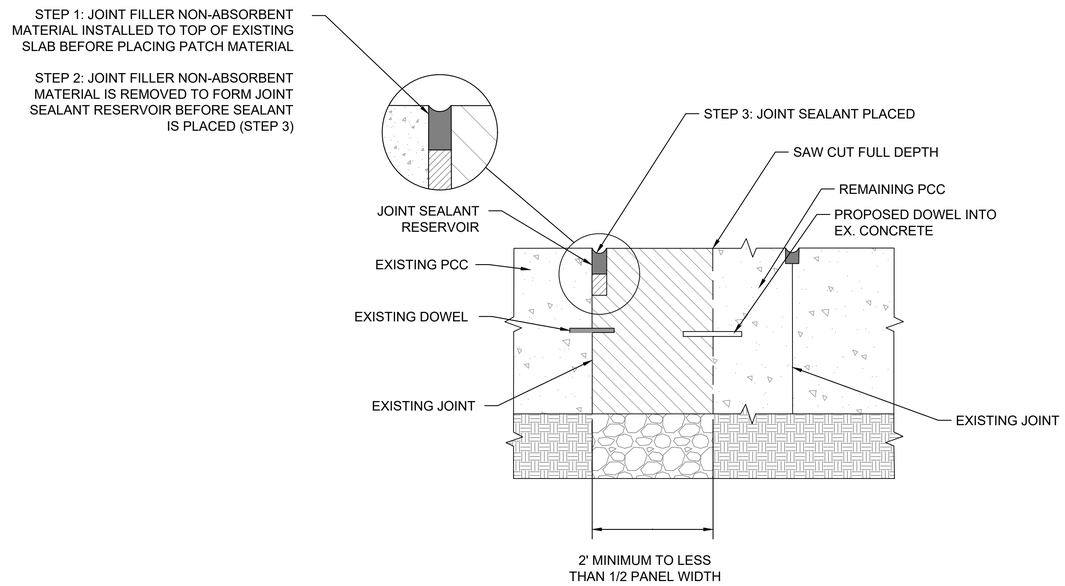

FULL DEPTH REPAIR IN RIGID PAVEMENT - PARTIAL SLAB REPLACEMENT (SECTION B-B)
NOT TO SCALE

REPAIR PROCEDURE FOR PARTIAL SLAB REPLACEMENT NOTES

1. ENSURE ALL PAVEMENT CLOSURES HAVE ALL REQUIRED ITEMS IN PLACE, SUCH AS BARRICADES, ETC..
2. MARK THE LIMITS OF THE AREA TO BE REPAIRED.
3. MAKE A FULL-DEPTH SAW CUT ALONG THE CONSTRUCTED JOINTS AT LEAST 2 FEET (0.6 M) BEYOND THE LIMITS OF THE DAMAGED PAVEMENT AND MAKE A SAW CUT PERPENDICULAR TO THE CONSTRUCTED JOINTS FROM THESE POINTS ACROSS THE WIDTH OF THE PAVEMENT PANEL. SEE FIGURE B-B.
4. IF DOWELS OR TIE BARS ARE PRESENT ALONG ANY EDGES, EITHER OF THE FOLLOWING OPTIONS IS ACCEPTABLE:

- IF DOWELS OR TIE BARS WILL BE EXPOSED AND SAVED, SAW EDGES FULL DEPTH JUST BEYOND THE END OF THE DOWELS OR TIE BARS. CAREFULLY SAW JOINTS ON THE JOINT LINE TO WITHIN 1 INCH (2.5 CM) OF THE DEPTH OF THE DOWEL OR TIE BAR. CAREFULLY BREAK UP AND REMOVE THE NARROW STRIPS OF CONCRETE ALONG DOWELED EDGES USING LIGHT 30 POUND (14 KG) OR LESS JACKHAMMERS, OR OTHER APPROVED EQUIPMENT.
- IF DOWELS OR TIE BARS ARE TO BE CUT AND REPLACED, MAKE A FULL DEPTH SAW CUT ALONG THE CONSTRUCTED JOINT CUTTING THE DOWELS AND TIE BARS.

5. TAKE CARE TO PREVENT DAMAGE TO THE DOWELS, TIE BARS, OR TO CONCRETE THAT REMAINS IN PLACE.
6. MAKE ADDITIONAL SAW CUTS WITHIN THE LIMITS OF THE REPAIR AREA, DIVIDING THE REPAIR AREA INTO QUARTERS.
7. USE LIGHT WEIGHT EQUIPMENT, I.E., JACKHAMMERS LESS THAN 30 POUNDS (14 KG), HAND TOOLS, ETC., TO REMOVE THE DAMAGED PCC PAVEMENT. WORK FROM INSIDE THE SAW CUT TOWARD THE INTERIOR OF THE AREA BEING REMOVED TO PREVENT DAMAGE TO THE PAVEMENT REMAINING.
8. REMOVE BY HAND ALL LOOSE MATERIAL AND VACUUM TO MINIMIZE ANY DISTURBANCE TO THE SUBGRADE OR BASE MATERIALS.
9. EXCAVATE AND INSTALL 6" OF P-209 CRUSHED AGGREGATE BASE COURSE.
10. INSTALL DOWEL BARS IN THE FACE OF THE PARENT PANEL BY DRILLING HORIZONTAL HOLES IN TO THE FACE AND USING AN EPOXY BONDING AGENT.
11. IF EXISTING DOWEL BARS HAVE BEEN CUT AND REMOVED, INSTALL DOWEL BARS OF THE TYPE AND SIZE OF THE EXISTING DOWEL BARS IN THE JOINTS THAT ARE PARALLEL TO THE DIRECTION OF TRAFFIC. ON APRONS AND AREAS WHERE TRAFFIC MAY BE OBLIQUE TO JOINTS, INSTALL DOWELS IN BOTH JOINT FACES.
12. INSTALL DOWELS BY DRILLING AND EPOXYING INTO THE PCC PAVEMENT AT LEAST 3 INCHES (8 CM) FROM THE LOCATION OF THE EXISTING CUT DOWELS. SPACE DOWEL BARS AT LEAST 3 INCHES (8 CM) FROM THE EDGE OF THE REPAIR AREA AND AT LEAST ONE BAR SPACING APART AT CORNERS OF INTERSECTING JOINTS.
13. OIL THE EXPOSED ENDS OF DOWEL BARS PRIOR TO BACKFILLING REPAIR AREA WITH CONCRETE.
14. INSTALL NONABSORBENT BOARD OR OTHER APPROVED MATERIAL WITHIN THE LIMITS OF THE JOINT SEAL RESERVOIR (STEP 1). THE NONABSORBENT BOARD WILL BE A STANDARD ½ INCH (13 MM) ASPHALT IMPREGNATED FIBER-BOARD. FOR JOINTS WIDER THAN ½ INCH (13 MM), ADJUST THE WIDTH OF THE NONABSORBENT BOARD TO FIT THE JOINT WIDTH.
15. FILL THE REPAIR AREA WITH CONCRETE AND CONSOLIDATE WITH A VIBRATOR. USE CONCRETE MEETING THE REQUIREMENTS OF P-501.
16. FINISH THE SURFACE TO MATCH THE EXISTING SURFACE.
17. SPRAY WITH CURING COMPOUND PER ASTM C309.
18. REMOVE THE NONABSORBENT BOARD OR OTHER APPROVED MATERIAL) AND PLACE JOINT SEALANT PER ASTM D6690.
19. THOROUGHLY CLEAN THE WORK AREA BEFORE OPENING THE PAVEMENT TO AIRCRAFT TRAFFIC.
20. DO NOT ALLOW TRAFFIC UNTIL THE CONCRETE HAS CURED.

WEATHER AND TEMPERATURE REQUIREMENTS

- DO NOT BEGIN REPAIRS DURING INCLEMENT WEATHER.
- DO NOT PLACE CONCRETE UNLESS THE AMBIENT TEMPERATURE IS AT LEAST 40°F (4°C) AND RISING AND THE CONCRETE TEMPERATURE IS GREATER THAN OR EQUAL TO 50°F (10°C).
- DO NOT PLACE CONCRETE ON FROZEN BASE, ICE, OR SNOW.
- WHEN THE AMBIENT TEMPERATURE EXCEEDS 85°F (29°C), SPRINKLE THE ADJACENT CONCRETE AND BASE WITH WATER IMMEDIATELY BEFORE PLACING CONCRETE.
- PLACE CONCRETE AT THE COOLEST TEMPERATURE PRACTICABLE, AND NEVER ALLOW THE PLACED CONCRETE TEMPERATURE TO EXCEED 90°F (32°C).

THRASHER
THE THRASHER GROUP INC.
600 WHITE OAKS BLVD,
P.O. BOX 940
BRIDGEPORT, WV 26330
P (304) 624-4108
F (304) 624-7831
www.thethrashergroup.com

THE INFORMATION CONTAINED HEREIN IS THE SOLE PROPERTY OF THE THRASHER GROUP, INC. REPRODUCTION OF THESE DOCUMENTS IN WHOLE, OR IN PART FOR ANY REASON WITHOUT PRIOR WRITTEN PERMISSION IS STRICTLY PROHIBITED.
COPYRIGHT © 2026
THE THRASHER GROUP, INC.

NO.	BY	DATE	DESCRIPTION

WHEELING - AASF2
TAXIWAY REPAIRS
WEST VIRIGNIA ARMY NATIONAL GUARD
OHIO COUNTY, WEST VIRIGNIA

DRAWN: DATE:
CHECKED: DATE:
APPROVED: DATE:
PROJECT No. T80-11612

DETAILS

SHEET No. C4.03

CAD FILE: R:\080\T80-11612.00 - WVANG - Wheeling AASF2 Taxiway Repair\Drawing\T80-11612.00 Details.dwg PLOT DATE/TIME: 7/6/2026 11:27 AM LAYOUT: C4.03 USER: nicole.price

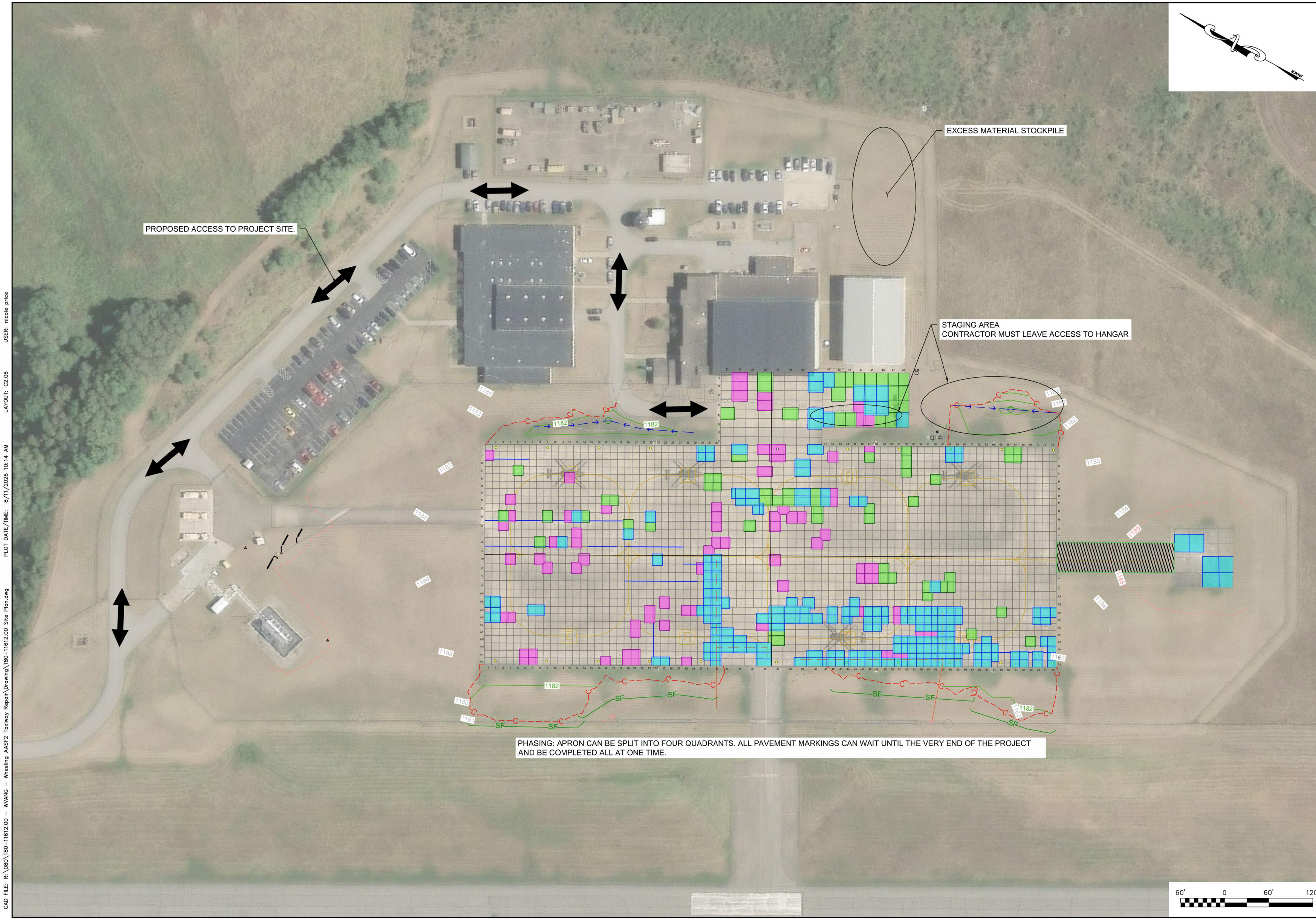

PHASING: APRON CAN BE SPLIT INTO FOUR QUADRANTS. ALL PAVEMENT MARKINGS CAN WAIT UNTIL THE VERY END OF THE PROJECT AND BE COMPLETED ALL AT ONE TIME.

THRASHER
THE THRASHER GROUP INC.
600 WHITE OAKS BLVD,
P.O. BOX 940
BRIDGEPORT, WV 26330

P (304) 624-4108
F (304) 624-7831

www.thethrashergroup.com

THE INFORMATION CONTAINED HEREIN IS THE SOLE PROPERTY OF THE THRASHER GROUP, INC. REPRODUCTION OF THESE DOCUMENTS IN WHOLE, OR IN PART FOR ANY REASON WITHOUT PRIOR WRITTEN PERMISSION IS STRICTLY PROHIBITED.

COPYRIGHT © 2026
THE THRASHER GROUP, INC.

NO.	BY	DATE	DESCRIPTION
1	NMP	8/11/2026	ADDED PHASING SHEET

WHEELING - AASF2
TAXIWAY REPAIRS
WEST VIRIGNIA ARMY NATIONAL GUARD
OHIO COUNTY, WEST VIRIGNIA

DRAWN: DATE:
CHECKED: DATE:
APPROVED: DATE:

PROJECT No.
T80-11612

PHASING PLAN

SHEET No.
1
C2.06

CAD FILE: R:\080\T80-11612.00 - WVANG - Wheeling AASF2 Taxiway Repair\Drawing\T80-11612.00 Site Plan.dwg PLOT DATE/TIME: 8/11/2026 10:14 AM LAYOUT: C2.06 USER: nicole.price