State of West Virginia
Department of Administration
Purchasing Division
2019 Washington Street East
Post Office Box 50130
Charleston, WV 25305-0130

Request for Quotation

RFQ NUMBER	PAGE
AGR1203	1

ADDRESS CORRESPONDENCE TO ATTENTION OF:
KRISTA FERRELL
304-558-2596

VENDOR
Mountain Air Sheet Metal, LLC
Attn: Quote Department
5298 Stranahan Drive
Cross Lanes, WV 25313

SHIP TO
DEPARTMENT OF AGRICULTURE
BUILDINGS & GROUNDS DIVISION
BUILDING 17
4720 BRENDA LANE
CHARLESTON, WV
25312 304-558-2221

DATE PRINTED	TERMS OF SALE	SHIP VIA	F.O.B.	FREIGHT TERMS
07/21/2011				

BID OPENING DATE: 08/23/2011 BID OPENING TIME 01:30PM

LINE	QUANTITY	UOP	CAT. NO.	ITEM NUMBER	UNIT PRICE	AMOUNT
0001	1	LS		968-42	$8571.4B	$60,000.01

HVAC UPGRADES FOR 7 BLDS @ GUS R. DOUGLAS CENTER

REQUEST FOR QUOTATION
(RFQ)
CONSTRUCTION
ARRA STIMULUS PROJECT

THE WEST VIRGINIA STATE PURCHASING DIVISION FOR THE AGENCY, THE WEST VIRGINIA DEPARTMENT OF AGRICULTURE, IS SOLICITING BIDS TO PROVIDE ALL LABOR AND MATERIALS FOR THE INSTALLATION OF HEATING, VENTILATION, AND AIR CONDITIONING (HVAC) EQUIPMENT IN SEVEN (7) BUILDINGS LOCATED AT THE GUS R. DOUGLAS AGRICULTURAL CENTER IN GUTHRIE, WEST VIRGINIA PER THE ATTACHED SPECIFICATIONS.

MANDATORY PRE-BID

A MANDATORY PRE-BID WILL BE HELD ON AUGUST 3, 2011 AT 10:00 AM IN THE JT JOHNSON CONFERENCE ROOM LOCATED IN BUILDING 2 ON THE SECOND FLOOR AT THE GUS R. DOUGLAS AGRICULTURAL CENTER IN GUTHRIE, WEST VIRGINIA. ALL INTERESTED PARTIES ARE REQUIRED TO ATTEND THIS MEETING. FAILURE TO ATTEND THE MANDATORY PRE-BID SHALL RESULT IN DISQUALIFICATION OF THE BID. NO ONE PERSON MAY REPRESENT MORE THAN ONE BIDDER.

AN ATTENDANCE SHEET WILL BE MADE AVAILABLE FOR ALL POTENTIAL BIDDERS TO COMPLETE. THIS WILL SERVE AS THE OFFICIAL DOCUMENT VERIFYING ATTENDANCE AT THE MANDATORY PRE-BID. FAILURE TO PROVIDE YOUR COMPANY AND

RECEIVED
2011 AUG 23 PM 1:10
WV PURCHASING DIVISION

SEE REVERSE SIDE FOR TERMS AND CONDITIONS

SIGNATURE	TELEPHONE	DATE
	304-553-0781	8/22/11

TITLE	FEIN	
owner	27-3474830	ADDRESS CHANGES TO BE NOTED ABOVE

WHEN RESPONDING TO RFQ, INSERT NAME AND ADDRESS IN SPACE ABOVE LABELED 'VENDOR'

GENERAL TERMS & CONDITIONS
REQUEST FOR QUOTATION (RFQ) AND REQUEST FOR PROPOSAL (RFP)

1. Awards will be made in the best interest of the State of West Virginia.

2. The State may accept or reject in part, or in whole, any bid.

3. Prior to any award, the apparent successful vendor must be properly registered with the Purchasing Division and have paid the required $125 fee.

4. All services performed or goods delivered under State Purchase Order/Contracts are to be continued for the term of the Purchase Order/Contracts, contingent upon funds being appropriated by the Legislature or otherwise being made available. In the event funds are not appropriated or otherwise available for these services or goods this Purchase Order/Contract becomes void and of no effect after June 30.

5. Payment may only be made after the delivery and acceptance of goods or services.

6. Interest may be paid for late payment in accordance with the ***West Virginia Code***.

7. Vendor preference will be granted upon written request in accordance with the ***West Virginia Code***.

8. The State of West Virginia is exempt from federal and state taxes and will not pay or reimburse such taxes.

9. The Director of Purchasing may cancel any Purchase Order/Contract upon 30 days written notice to the seller.

10. The laws of the State of West Virginia and the ***Legislative Rules*** of the Purchasing Division shall govern the purchasing process.

11. Any reference to automatic renewal is hereby deleted. The Contract may be renewed only upon mutual written agreement of the parties.

12. BANKRUPTCY: In the event the vendor/contractor files for bankruptcy protection, the State may deem this contract null and void, and terminate such contract without further order.

13. HIPAA BUSINESS ASSOCIATE ADDENDUM: The West Virginia State Government HIPAA Business Associate Addendum (BAA), approved by the Attorney General, is available online at **www.state.wv.us/admin/purchase/vrc/hipaa.htm** and is hereby made part of the agreement. Provided that the Agency meets the definition of a Cover Entity (45 CFR §160.103) and will be disclosing Protected Health Information (45 CFR §160.103) to the vendor.

14. CONFIDENTIALITY: The vendor agrees that he or she will not disclose to anyone, directly or indirectly, any such personally identifiable information or other confidential information gained from the agency, unless the individual who is the subject of the information consents to the disclosure in writing or the disclosure is made pursuant to the agency's policies, procedures, and rules. Vendor further agrees to comply with the Confidentiality Policies and Information Security Accountability Requirements, set forth in http://www.state.wv.us/admin/purchase/privacy/noticeConfidentiality.pdf.

15. LICENSING: Vendors must be licensed and in good standing in accordance with any and all state and local laws and requirements by any state or local agency of West Virginia, including, but not limited to, the West Virginia Secretary of State's Office, the West Virginia Tax Department, and the West Virginia Insurance Commission. The vendor must provide all necessary releases to obtain information to enable the director or spending unit to verify that the vendor is licensed and in good standing with the above entities.

16. ANTITRUST: In submitting a bid to any agency for the State of West Virginia, the bidder offers and agrees that if the bid is accepted the bidder will convey, sell, assign or transfer to the State of West Virginia all rights, title and interest in and to all causes of action it may now or hereafter acquire under the antitrust laws of the United States and the State of West Virginia for price fixing and/or unreasonable restraints of trade relating to the particular commodities or services purchased or acquired by the State of West Virginia. Such assignment shall be made and become effective at the time the purchasing agency tenders the initial payment to the bidder.

I certify that this bid is made without prior understanding, agreement, or connection with any corporation, firm, limited liability company, partnership, or person or entity submitting a bid for the same material, supplies, equipment or services and is in all respects fair and without collusion or Fraud. I further certify that I am authorized to sign the certification on behalf of the bidder or this bid.

INSTRUCTIONS TO BIDDERS

1. Use the quotation forms provided by the Purchasing Division. Complete all sections of the quotation form.

2. Items offered must be in compliance with the specifications. Any deviation from the specifications must be clearly indicated by the bidder. Alternates offered by the bidder as **EQUAL** to the specifications must be clearly defined. A bidder offering an alternate should attach complete specifications and literature to the bid. The Purchasing Division may waive minor deviations to specifications.

3. Unit prices shall prevail in case of discrepancy. All quotations are considered F.O.B. destination unless alternate shipping terms are clearly identified in the quotation.

4. All quotations must be delivered by the bidder to the office listed below prior to the date and time of the bid opening. Failure of the bidder to deliver the quotations on time will result in bid disqualifications: Department of Administration, Purchasing Division, 2019 Washington Street East, P.O. Box 50130, Charleston, WV 25305-0130

5. Communication during the solicitation, bid, evaluation or award periods, except through the Purchasing Division, is strictly prohibited (W.Va. C.S.R. §148-1-6.6).

State of West Virginia
Department of Administration
Purchasing Division
2019 Washington Street East
Post Office Box 50130
Charleston, WV 25305-0130

Request for Quotation

RFQ NUMBER	PAGE
AGR1203	2

ADDRESS CORRESPONDENCE TO ATTENTION OF:
KRISTA FERRELL
304-558-2596

VENDOR
RFQ COPY
TYPE NAME/ADDRESS HERE

Mountain Air Sheet Metal
5298 Stranahan Drive
Cross Lanes, WV 25313

SHIP TO
DEPARTMENT OF AGRICULTURE
BUILDINGS & GROUNDS DIVISION
BUILDING 17
4720 BRENDA LANE
CHARLESTON, WV
25312 304-558-2221

DATE PRINTED	TERMS OF SALE	SHIP VIA	F.O.B.	FREIGHT TERMS
07/21/2011				

BID OPENING DATE: 08/23/2011 BID OPENING TIME 01:30PM

LINE	QUANTITY	UOP	CAT. NO.	ITEM NUMBER	UNIT PRICE	AMOUNT

REPRESENTATIVE NAME ON THE ATTENDANCE SHEET WILL RESULT IN DISQUALIFICATION OF THE BID. THE STATE WILL NOT ACCEPT ANY OTHER DOCUMENTATION TO VERIFY ATTENDANCE. THE BIDDER IS RESPONSIBLE FOR ENSURING THEY HAVE COMPLETED THE INFORMATION REQUIRED ON THE ATTENDANCE SHEET. THE PURCHASING DIVISION AND THE STATE AGENCY WILL NOT ASSUME ANY RESPONSIBILITY FOR A BIDDER-S FAILURE TO COMPLETE THE PRE-BID ATTENDANCE SHEET. IN ADDITION, WE REQUEST THAT ALL POTENTIAL BIDDERS INCLUDE THEIR E-MAIL ADDRESS AND FAX NUMBER.

ALL POTENTIAL BIDDERS ARE REQUESTED TO ARRIVE PRIOR TO THE STARTING TIME FOR THE PRE-BID. BIDDERS WHO ARRIVE LATE, BUT PRIOR TO THE DISMISSAL OF THE TECHNICAL PORTION OF THE PRE-BID WILL BE PERMITTED TO SIGN IN. BIDDERS WHO ARRIVE AFTER CONCLUSION OF THE TECHNICAL PORTION OF THE PRE-BID, BUT DURING ANY SUBSEQUENT PART OF THE PRE-BID WILL NOT BE PERMITTED TO SIGN THE ATTENDANCE SHEET.

TECHNICAL QUESTIONS CONCERNING THIS SOLICITATION MUST BE SUBMITTED IN WRITING TO KRISTA FERRELL IN THE WEST VIRGINIA STATE PURCHASING DIVISION VIA FAX AT 304-558-4115 OR VIA EMAIL AT KRISTA.S.FERRELL@WV.GOV.

DEADLINE FOR ALL TECHNICAL QUESTIONS IS 08/08/2011 AT THE CLOSE OF BUSINESS.

ANY TECHNICAL QUESTIONS RECEIVED WILL BE ANSWERED BY FORMAL WRITTEN ADDENDUM TO BE ISSUED AFTER THE DEADLIN HAS LAPSED.

VERBAL COMMUNICATION: ANY VERBAL COMMUNICATION BETWEEN THE VENDOR AND ANY STATE PERSONNEL IS NOT BINDING, INCLUDING THAT MADE AT THE MANDATORY PRE-BID MEETING. ONLY INFORMATION ISSUED IN WRITING AND ADDED TO THE

SEE REVERSE SIDE FOR TERMS AND CONDITIONS

SIGNATURE	TELEPHONE	DATE
TITLE	FEIN	ADDRESS CHANGES TO BE NOTED ABOVE

WHEN RESPONDING TO RFQ, INSERT NAME AND ADDRESS IN SPACE ABOVE LABELED 'VENDOR'

State of West Virginia
Department of Administration
Purchasing Division
2019 Washington Street East
Post Office Box 50130
Charleston, WV 25305-0130

Request for Quotation

RFQ NUMBER	PAGE
AGR1203	3

ADDRESS CORRESPONDENCE TO ATTENTION OF:
KRISTA FERRELL
304-558-2596

VENDOR
RFQ COPY
TYPE NAME/ADDRESS HERE

Mountain Air Sheet Metal
5298 Stranahan Drive
Cross Lanes, WV 25313

SHIP TO
DEPARTMENT OF AGRICULTURE
BUILDINGS & GROUNDS DIVISION
BUILDING 17
4720 BRENDA LANE
CHARLESTON, WV
25312 304-558-2221

DATE PRINTED	TERMS OF SALE	SHIP VIA	F.O.B.	FREIGHT TERMS
07/21/2011				

BID OPENING DATE: 08/23/2011 BID OPENING TIME 01:30PM

LINE	QUANTITY	UOP	CAT. NO.	ITEM NUMBER	UNIT PRICE	AMOUNT

RFQ BY FORMAL WRITTEN ADDENDUM IS CONSIDERED BINDING.

NO CONTACT BETWEEN THE VENDOR AND THE AGENCY IS PERMITTED WITHOUT THE EXPRESS WRITTEN CONSENT OF THE STATE BUYER. VIOLATION MAY RESULT IN THE REJECTION OF THE BID. THE STATE BUYER NAMED ABOVE IS THE SOLE CONTACT FOR ANY AND ALL INQUIRIES AFTER THE RFQ HAS BEEN RELEASED.

EXHIBIT 5

WEST VIRGINIA CODE 21-1D-5 PROVIDES THAT: ANY SOLICITATION FOR A PUBLIC IMPROVEMENT CONSTRUCTION CONTRACT REQUIRES EACH VENDOR THAT SUBMITS A BID FOR THE WORK TO SUBMIT AT THE SAME TIME AN AFFIDAVIT OF COMPLIANCE WITH THE BID. THE ENCLOSED DRUG-FREE WORKPLACE AFFIDAVIT MUST BE SIGNED AND SUBMITTED WITH THE BID AS EVIDENCE OF THE VENDOR'S COMPLIANCE WITH THE PROVISIONS OF ARTICLE 1D, CHAPTER 21 OF THE WEST VIRGINIA CODE. FAILURE TO SUBMIT THE SIGNED DRUG-FREE WORKPLACE AFFIDAVIT WITH THE BID SHALL RESULT IN DISQUALIFICATION OF SUCH BID.

NOTICE TO PROCEED: THIS CONTRACT IS TO BE PERFORMED WITHIN 30 CALENDAR DAYS AFTER THE NOTICE TO PROCEED IS RECEIVED. UNLESS OTHERWISE SPECIFIED, THE FULLY EXECUTED PURCHASE ORDER WILL BE CONSIDERED NOTICE TO PROCEED.

CANCELLATION: THE DIRECTOR OF PURCHASING RESERVES THE RIGHT TO CANCEL THIS CONTRACT IMMEDIATELY UPON WRITTEN NOTICE TO THE VENDOR IF THE MATERIALS OR WORKMANSHIP SUPPLIED ARE OF AN INFERIOR QUALITY OR DO NOT CONFORM WITH THE SPECIFICATIONS OF THE BID AND CONTRACT HERE IN.

WAGE RATES: THE CONTRACTOR OR SUBCONTRACTOR SHALL PAY

SEE REVERSE SIDE FOR TERMS AND CONDITIONS

SIGNATURE	TELEPHONE	DATE
TITLE	FEIN	ADDRESS CHANGES TO BE NOTED ABOVE

WHEN RESPONDING TO RFQ, INSERT NAME AND ADDRESS IN SPACE ABOVE LABELED 'VENDOR'

State of West Virginia
Department of Administration
Purchasing Division
2019 Washington Street East
Post Office Box 50130
Charleston, WV 25305-0130

Request for Quotation

RFQ NUMBER	PAGE
AGR1203	4

ADDRESS CORRESPONDENCE TO ATTENTION OF:
KRISTA FERRELL
304-558-2596

VENDOR
RFQ COPY
TYPE NAME/ADDRESS HERE

Mountain Air Sheet Metal
5298 Stranahan Drive
Cross Lanes, WV 25313

SHIP TO
DEPARTMENT OF AGRICULTURE
BUILDINGS & GROUNDS DIVISION
BUILDING 17
4720 BRENDA LANE
CHARLESTON, WV
25312 304-558-2221

DATE PRINTED	TERMS OF SALE	SHIP VIA	F.O.B.	FREIGHT TERMS
07/21/2011				

BID OPENING DATE: 08/23/2011 BID OPENING TIME 01:30PM

LINE	QUANTITY	UOP	CAT. NO.	ITEM NUMBER	UNIT PRICE	AMOUNT

THE HIGHER OF THE U.S. DEPARTMENT OF LABOR MINIMUM WAGE RATES AS ESTABLISHED FOR KANAWHA COUNTY, PURSUANT TO WEST VIRGINIA CODE 21-5A, ET, SEQ. (PREVAILING WAGE RATES APPLY TO THIS PROJECT)

ARBITRATION: ANY REFERENCES MADE TO ARBITRATION OR INTEREST FOR PAYMENTS DUE (EXCEPT FOR ANY INTEREST REQUIRED BY STATE LAW) CONTAINED IN THIS CONTRACT OR IN ANY AMERICAN INSTITUTE OF ARCHITECTS DOCUMENTS PERTAINING TO THIS CONTRACT ARE HEREBY DELETED.

WORKERS' COMPENSATION: VENDOR IS REQUIRED TO PROVIDE A CERTIFICATE FROM WORKERS' COMPENSATION IF SUCCESSFUL.

ALL OF THE ITEMS CHECKED BELOW WILL BE A REQUIREMENT OF THIS CONTRACT:

(XX) INSURANCE: SUCCESSFUL VENDOR SHALL FURNISH PROOF OF COMMERCIAL GENERAL LIABILITY INSURANCE PRIOR TO ISSUANCE OF CONTRACT. UNLESS OTHERWISE SPECIFIED IN THE BID DOCUMENTS, THE MINIMUM AMOUNT OF INSURANCE COVERAGE REQUIRED IS $250,000.

( ) BUILDERS RISK INSURANCE: SUCCESSFUL VENDOR SHALL FURNISH PROOF OF BUILDERS RISK - ALL RISK INSURANCE IN AN AMOUNT EQUAL TO 100% OF THE AMOUNT OF THE CONTRACT.

(XX) BONDS: FIVE PERCENT (5%) OF THE TOTAL AMOUNT OF THE BID PAYABLE TO THE STATE OF WEST VIRGINIA, SHALL BE SUBMITTED WITH EACH BID AS A BID BOND. THE SUCCESSFUL BIDDER SHALL ALSO FURNISH A PERFORMANCE BOND AND LABOR/MATERIAL BOND FOR 100% OF THE AMOUNT OF THE CONTRACT. BONDS MAY BE PROVIDED IN THE FORM OF A CERTIFIED CHECK, IRREVOCABLE LETTER OF CREDIT, OR BOND FURNISHED BY A SOLVENT SURETY COMPANY AUTHORIZED TO DO BUSINESS IN THE STATE OF WEST VIRGINIA. A LETTER OF CREDIT SUBMITTED

SEE REVERSE SIDE FOR TERMS AND CONDITIONS

SIGNATURE	TELEPHONE	DATE
TITLE	FEIN	ADDRESS CHANGES TO BE NOTED ABOVE

WHEN RESPONDING TO RFQ, INSERT NAME AND ADDRESS IN SPACE ABOVE LABELED 'VENDOR'

State of West Virginia
Department of Administration
Purchasing Division
2019 Washington Street East
Post Office Box 50130
Charleston, WV 25305-0130

Request for Quotation

RFQ NUMBER	PAGE
AGR1203	5

ADDRESS CORRESPONDENCE TO ATTENTION OF:
KRISTA FERRELL
304-558-2596

VENDOR
RFQ COPY
TYPE NAME/ADDRESS HERE
Mountain Air Sheet Metal
5298 Stranahan Drive
Cross Lanes, WV 25313

SHIP TO
DEPARTMENT OF AGRICULTURE
BUILDINGS & GROUNDS DIVISION
BUILDING 17
4720 BRENDA LANE
CHARLESTON, WV
25312 304-558-2221

DATE PRINTED	TERMS OF SALE	SHIP VIA	F.O.B.	FREIGHT TERMS
07/21/2011				

BID OPENING DATE: 08/23/2011 BID OPENING TIME 01:30PM

LINE	QUANTITY	UOP	CAT. NO.	ITEM NUMBER	UNIT PRICE	AMOUNT

IN LIEU OF A BOND WILL ONLY BE ALLOWED FOR PROJECTS UNDER $100,000. PERSONAL OR BUSINESS CHECKS ARE NOT ACCECPTABLE IN LIEU OF THE 5% BID BOND, PERFORMANCE BOND, OR LABOR AND MATERIAL BOND.

( ) MAINTENANCE BOND: A TWO (2) YEAR MAINTENANCE BON COVERING THE ROOFING SYSTEM WILL BE A REQUIREMENT OF THE SUCCESSFUL VENDOR.

REV. 11/00

EXHIBIT 7

DOMESTIC ALUMINUM, GLASS & STEEL IN PUBLIC WORKS PROJECTS

IN ACCORDANCE WITH WEST VIRGINIA CODE 5-19-1 ET., SEQ., EVERY CONTRACT FOR CONSTRUCTION, RECONSTRUCTION, ALTERATION, REPAIR, IMPROVEMENT OR MAINTENANCE OF PUBLIC WORKS, WHERE THE COST IS MORE THAN $50,000 AND, IN THE CASE OF STEEL ONLY, WHERE THE COST OF STEEL IS MORE THAN $50,000 OR WHERE MORE THAN 10,000 POUNDS OF STEEL ARE REQUIRED, THE STATE WILL ACCEPT ONLY ALUMINU GLASS, OR STEEL PRODUCTS PRODUCED IN THE UNITED STATES. IN ADDITION, ITEMS OF MACHINERY OR EQUIPMENT PURCHASED FOR USE AT THE SITE OF PUBLIC WORKS SHALL BE MADE OF DOMESTIC ALUMINUM, GLASS OR STEEL, UNLESS THE COST OF THE PRODUCT IS LESS THAN $50,000 OR LESS THAN 10,000 POUNDS OF STEEL ARE USED IN PUBLIC WORKS PROJECTS.

FOREIGN MADE ALUMINUM, GLASS OR STEEL PRODUCTS MAY BE ACCEPTED ONLY IF THE COST OF DOMESTIC PRODUCTS IS FOUND TO BE UNREASONABLE. SUCH COST IS UNREASONABLE IF IT IS 20% OR MORE HIGHER THAN THE BID PRICE FOR FOREIGN MADE PRODUCTS. IF THE DOMESTIC ALUMINUM, GLASS OR STEEL

SEE REVERSE SIDE FOR TERMS AND CONDITIONS

SIGNATURE	TELEPHONE	DATE
TITLE	FEIN	ADDRESS CHANGES TO BE NOTED ABOVE

WHEN RESPONDING TO RFQ, INSERT NAME AND ADDRESS IN SPACE ABOVE LABELED 'VENDOR'

State of West Virginia
Department of Administration
Purchasing Division
2019 Washington Street East
Post Office Box 50130
Charleston, WV 25305-0130

Request for Quotation

RFQ NUMBER	PAGE
AGR1203	6

ADDRESS CORRESPONDENCE TO ATTENTION OF:
KRISTA FERRELL
304-558-2596

VENDOR
RFQ COPY
TYPE NAME/ADDRESS HERE

Mountain Air Sheet Metal
5298 Stranahan Drive
Cross Lanes, WV 25313

SHIP TO
DEPARTMENT OF AGRICULTURE
BUILDINGS & GROUNDS DIVISION
BUILDING 17
4720 BRENDA LANE
CHARLESTON, WV
25312 304-558-2221

DATE PRINTED	TERMS OF SALE	SHIP VIA	F.O.B.	FREIGHT TERMS
07/21/2011				

BID OPENING DATE: 08/23/2011 BID OPENING TIME 01:30PM

LINE	QUANTITY	UOP	CAT. NO.	ITEM NUMBER	UNIT PRICE	AMOUNT

PRODUCTS TO BE SUPPLIED OR PRODUCED IN A "SUBSTANTIAL LABOR SURPLUS AREA", AS DEFINED BY THE UNITED STATES DEPARTMENT OF LABOR, FOREIGN PRODUCTS MAY BE SUPPLIED ONLY IF DOMESTIC PRODUCTS ARE 30% OR MORE HIGHER IN PRICE THAN THE FOREIGN MADE PRODUCTS.

IF, PRIOR TO THE AWARD OF A CONTRACT UNDER THE ABOVE PROVISIONS, THE SPENDING OFFICER OF THE SPENDING UNIT DETERMINES THAT THERE EXISTS A BID FOR LIKE FOREIGN ALUMINUM, GLASS OR STEEL THAT IS REASONABLE AND LOWER THAN THE LOWEST BID DOMESTIC PRODUCTS, THE SPENDING OFFICE MAY REQUEST, IN WRITING, A REEVALUATION AND REDUCTION IN THE LOWEST BID FOR SUCH DOMESTIC PRODUCTS. ALL VENDORS MUST INDICATE IN THEIR BID IF THEY ARE SUPPLYING FOREIGN ALUMINUM, GLASS OR STEEL.

REV. 3/88

EXHIBIT 9

NOTICE FOR ISSUANCE & ACKNOWLEDGEMENT OF CONSTRUCTION PROJECT ADDENDA

THE ARCHITECT/ENGINEER AND/OR AGENCY SHALL BE REQUIRED TO ABIDE BY THE FOLLOWING SCHEDULE IN ISSUING CONSTRUCTION PROJECT ADDENDA FOR STATE AGENCIES:

(1) THE ARCHITECT/ENGINEER SHALL PREPARE THE ADDENDUM AND A LIST OF ALL PARTIES THAT HAVE PROCURED DRAWINGS AND SPECIFICATIONS FOR THE PROJECT. THE ADDENDUM AND LIST SHALL BE FORWARDED TO THE BUYER IN THE STATE PURCHASING DIVISION. THE ARCHITECT/ENGINEER SHALL ALSO SEND A COPY OF THE ADDENDUM TO THE STATE AGENCY FOR WHICH THE CONTRACT IS ISSUED.

SEE REVERSE SIDE FOR TERMS AND CONDITIONS

SIGNATURE	TELEPHONE	DATE
TITLE	FEIN	ADDRESS CHANGES TO BE NOTED ABOVE

WHEN RESPONDING TO RFQ, INSERT NAME AND ADDRESS IN SPACE ABOVE LABELED 'VENDOR'

State of West Virginia
Department of Administration
Purchasing Division
2019 Washington Street East
Post Office Box 50130
Charleston, WV 25305-0130

Request for Quotation

RFQ NUMBER	PAGE
AGR1203	7

ADDRESS CORRESPONDENCE TO ATTENTION OF:
KRISTA FERRELL
304-558-2596

VENDOR
RFQ COPY
TYPE NAME/ADDRESS HERE

Mountain Air Sheet Metal
5298 Stranahan Drive
Cross Lanes, WV 25313

SHIP TO
DEPARTMENT OF AGRICULTURE
BUILDINGS & GROUNDS DIVISION
BUILDING 17
4720 BRENDA LANE
CHARLESTON, WV
25312 304-558-2221

DATE PRINTED	TERMS OF SALE	SHIP VIA	F.O.B.	FREIGHT TERMS
07/21/2011				

BID OPENING DATE: 08/23/2011 BID OPENING TIME 01:30PM

LINE	QUANTITY	UOP	CAT. NO.	ITEM NUMBER	UNIT PRICE	AMOUNT

(2) THE BUYER SHALL SEND THE ADDENDUM TO ALL INTERESTED PARTIES AND, IF NECESSARY, EXTEND THE BID OPENING DATE. ANY ADDENDUM SHOULD BE RECEIVED BY THE BUYER WITHIN FOURTEEN (14) DAYS PRIOR TO THE BID OPENING DATE.

(3) ALL ADDENDA SHOULD BE FORMALLY ACKNOWLEDGED BY ALL BIDDERS AND SUBMITTED TO THE STATE PURCHASING DIVISION. THE SAME RULES AND REGULATIONS THAT APPLY TO THE ORIGINAL BIDDING DOCUMENT SHALL ALSO APPLY TO AN ADDENDUM DOCUMENT. THE ONLY EXCEPTION MAY BE FOR AN ADDENDUM THAT IS ISSUED FOR TH SOLE PURPOSE OF CHANGING A BID OPENING TIME AND/OR DATE.

REV. 11/96

EXHIBIT 10

ADDENDUM ACKNOWLEDGEMENT

I HEREBY ACKNOWLEDGE RECEIPT OF THE FOLLOWING CHECKED ADDENDUM(S) AND HAVE MADE THE NECESSARY REVISIONS TO MY PROPOSAL, PLANS AND/OR SPECIFICATION, ETC.

ADDENDUM NOS.:

NO. 1 .....

NO. 2 .....

NO. 3 .....

NO. 4 .....

SEE REVERSE SIDE FOR TERMS AND CONDITIONS

SIGNATURE	TELEPHONE	DATE
TITLE	FEIN	ADDRESS CHANGES TO BE NOTED ABOVE

WHEN RESPONDING TO RFQ, INSERT NAME AND ADDRESS IN SPACE ABOVE LABELED "VENDOR"

State of West Virginia
Department of Administration
Purchasing Division
2019 Washington Street East
Post Office Box 50130
Charleston, WV 25305-0130

Request for Quotation

RFQ NUMBER	PAGE
AGR1203	8

ADDRESS CORRESPONDENCE TO ATTENTION OF:
KRISTA FERRELL
304-558-2596

VENDOR
RFQ COPY
TYPE NAME/ADDRESS HERE

Mountain Air Sheet Metal
5298 Stranahan Drive
Cross Lanes, WV 25313

SHIP TO
DEPARTMENT OF AGRICULTURE
BUILDINGS & GROUNDS DIVISION
BUILDING 17
4720 BRENDA LANE
CHARLESTON, WV
25312 304-558-2221

DATE PRINTED	TERMS OF SALE	SHIP VIA	F.O.B.	FREIGHT TERMS
07/21/2011				

BID OPENING DATE: 08/23/2011 BID OPENING TIME 01:30PM

LINE	QUANTITY	UOP	CAT. NO.	ITEM NUMBER	UNIT PRICE	AMOUNT

NO. 5 .....

I UNDERSTAND THAT FAILURE TO CONFIRM THE RECEIPT OF THE ADDENDUM(S) MAY BE CAUSE FOR REJECTION OF THE BIDS.

VENDOR MUST CLEARLY UNDERSTAND THAT ANY VERBAL REPRESENTATION MADE OR ASSUMED TO BE MADE DURING ANY ORAL DISCUSSION HELD BETWEEN VENDOR'S REPRESENTATIVES AND ANY STATE PERSONNEL IS NOT BINDING. ONLY THE INFORMATION ISSUED IN WRITING AND ADDED TO THE SPECIFICATIONS BY AN OFFICIAL ADDENDUM IS BINDING.

.....SIGNATURE

Mountain Air Sheet Metal COMPANY

8/22/11 .....DATE

REV. 11/96

CONTRACTORS LICENSE

WEST VIRGINIA STATE CODE 21-11-2 REQUIRES THAT ALL PERSONS DESIRING TO PERFORM CONTRACTING WORK IN THIS STATE MUST BE LICENSED. THE WEST VIRGINIA CONTRACTORS LICENSING BOARD IS EMPOWERED TO ISSUE THE CONTRACTORS LICENSE. APPLICATIONS FOR A CONTRACTORS LICENSE MAY BE MADE BY CONTACTING THE WEST VIRGINIA DIVISION OF LABOR CAPITOL COMPLEX, BUILDING 3, ROOM 319, CHARLESTON, WV 25305. TELEPHONE: (304) 558-7890.

WEST VIRGINIA STATE CODE 21-11-11 REQUIRES ANY PROSPECTIVE BIDDER TO INCLUDE THE CONTRACTORS LICENSE NUMBER ON THEIR BID.

SEE REVERSE SIDE FOR TERMS AND CONDITIONS

SIGNATURE	TELEPHONE	DATE
TITLE	FEIN	ADDRESS CHANGES TO BE NOTED ABOVE

WHEN RESPONDING TO RFQ, INSERT NAME AND ADDRESS IN SPACE ABOVE LABELED 'VENDOR'

State of West Virginia
Department of Administration
Purchasing Division
2019 Washington Street East
Post Office Box 50130
Charleston, WV 25305-0130

Request for Quotation

RFQ NUMBER	PAGE
AGR1203	9

ADDRESS CORRESPONDENCE TO ATTENTION OF:
KRISTA FERRELL
304-558-2596

VENDOR
RFQ COPY
TYPE NAME/ADDRESS HERE

Mountain Air Sheet Metal
5298 Stranahan Drive
Cross Lanes, WV 25313

SHIP TO
DEPARTMENT OF AGRICULTURE
BUILDINGS & GROUNDS DIVISION
BUILDING 17
4720 BRENDA LANE
CHARLESTON, WV
25312 304-558-2221

DATE PRINTED	TERMS OF SALE	SHIP VIA	F.O.B.	FREIGHT TERMS
07/21/2011				

BID OPENING DATE: 08/23/2011 BID OPENING TIME 01:30PM

LINE	QUANTITY	UOP	CAT. NO.	ITEM NUMBER	UNIT PRICE	AMOUNT

BIDDER TO COMPLETE:

CONTRACTORS NAME: Mountain Air Sheet Metal

CONTRACTORS LICENSE NO.: WV047396

THE SUCCESSFUL BIDDER WILL BE REQUIRED TO FURNISH A COPY OF THEIR CONTRACTORS LICENSE PRIOR TO ISSUANCE OF A PURCHASE ORDER/CONTRACT

APPLICABLE LAW

THE WEST VIRGINIA STATE CODE, PURCHASING DIVISION RULES AND REGULATIONS, AND THE INFORMATION PROVIDED IN THE "REQUEST FOR QUOTATION" ISSUED BY THE PURCHASING DIVISION IS THE SOLE AUTHORITY GOVERNING THIS PROCUREMENT.

ANY INFORMATION PROVIDED IN SPECIFICATION MANUALS, OR ANY OTHER SOURCE, VERBAL OR WRITTEN, WHICH CONTRADICTS OR ALTERS THE INFORMATION PROVIDED FROM THE SOURCES AS DESCRIBED IN THE ABOVE PARAGRAPH IS VOID AND OF NO EFFECT.

BANKRUPTCY: IN THE EVENT THE VENDOR/CONTRACTOR FILES FOR BANKRUPTCY PROTECTION, THE STATE MAY DEEM THE CONTRACT NULL AND VOID, AND TERMINATE SUCH CONTRACT WITHOUT FURTHER ORDER.

REV. 5/2009

NOTICE

A SIGNED BID MUST BE SUBMITTED TO:

SEE REVERSE SIDE FOR TERMS AND CONDITIONS

SIGNATURE	TELEPHONE	DATE
TITLE	FEIN	ADDRESS CHANGES TO BE NOTED ABOVE

WHEN RESPONDING TO RFQ, INSERT NAME AND ADDRESS IN SPACE ABOVE LABELED 'VENDOR'

State of West Virginia
Department of Administration
Purchasing Division
2019 Washington Street East
Post Office Box 50130
Charleston, WV 25305-0130

Request for Quotation

RFQ NUMBER	PAGE
AGR1203	10

ADDRESS CORRESPONDENCE TO ATTENTION OF:
KRISTA FERRELL
304-558-2596

VENDOR
RFQ COPY
TYPE NAME/ADDRESS HERE

Mountain Air Sheet Metal
5298 Stranahan Drive
Cross Lanes, WV 25313

SHIP TO
DEPARTMENT OF AGRICULTURE
BUILDINGS & GROUNDS DIVISION
BUILDING 17
4720 BRENDA LANE
CHARLESTON, WV
25312 304-558-2221
3306

DATE PRINTED	TERMS OF SALE	SHIP VIA	F.O.B.	FREIGHT TERMS
07/21/2011				

BID OPENING DATE: 08/23/2011 BID OPENING TIME 01:30PM

LINE	QUANTITY	UOP	CAT. NO.	ITEM NUMBER	UNIT PRICE	AMOUNT

DEPARTMENT OF ADMINISTRATION
PURCHASING DIVISION
BUILDING 15
2019 WASHINGTON STREET, EAST
CHARLESTON, WV 25305-0130

THE BID SHOULD CONTAIN THIS INFORMATION ON THE FACE OF THE ENVELOPE OR THE BID MAY NOT BE CONSIDERED:

SEALED BID

BUYER: KRISTA FERRELL-FILE 21

REQ. NO.: AGR1203

BID OPENING DATE: 08/23/2011

BID OPENING TIME: 1:30 PM

PLEASE PROVIDE A FAX NUMBER IN CASE IT IS NECESSARY TO CONTACT YOU REGARDING YOUR BID:

304-586-2613

PLEASE PRINT OR TYPE NAME OF PERSON TO CONTACT CONCERNING THIS QUOTE:

Holden Eads

SEE REVERSE SIDE FOR TERMS AND CONDITIONS

SIGNATURE	TELEPHONE	DATE
TITLE	FEIN	ADDRESS CHANGES TO BE NOTED ABOVE

WHEN RESPONDING TO RFQ, INSERT NAME AND ADDRESS IN SPACE ABOVE LABELED 'VENDOR'

WEST VIRGINIA DEPARTMENT OF AGRICULTURE
ADMINISTRATIVE SERVICES DIVISION, BUILDING AND GROUNDS
GUS R DOUGLASS AGRICULTURAL CENTER AT GUTHRIE
HVAC REPLACEMENTS AT GUTHRIE CENTER BUILDINGS

Locations: 88 Gus R Douglass Lane
18 Anna Lee Circle
32 Anna Lee Circle
68 Anna Lee Circle
72 Anna Lee Circle
74 Anna Lee Circle
49 Anna Lee Circle
Charleston WV, 25312

For: West Virginia Department of Agriculture
Administrative Services Division, Building and Grounds
1900 Kanawha Boulevard, East
Charleston, WV 25305

Bid Contact: Krista S. Ferrell, Buyer Supervisor
West Virginia State Purchasing Division
2019 Washington Street, East
Charleston, WV 25305
Phone: 304-558-2596
Fax: 304-558-4115
Email: krista.s.ferrell@wv.gov

The West Virginia Department of Agriculture, Administrative Services Division/Building and Grounds Section, is requesting quotations for all labor and materials required to install new Heating, Air Conditioning and Ventilation (HVAC) Equipment in seven (7) buildings, located at the Gus R Douglass Agricultural Center at Guthrie (GRDACAG), as stated herein.

THIS PROJECT IS PAID FOR WITH FEDERAL FUNDING THROUGH THE AMERICAN RECOVERY and REINVESTMENT ACT (ARRA) OF 2009

Three major provisions addressed within this project that must be adhered to, are the BUY AMERICAN ACT, DAVIS-BACON ACT, and the HISTORIC PRESERVATION ACT. The Owner has contacted and received approval from the State Historic Preservation Officer in compliance with the HISTORIC PRESERVATION ACT.

Bidders must submit the attached sheet, Attachment 1, verifying they understand and accept these requirements.

Pre Bid Meeting:

A mandatory pre-bid meeting for this project is scheduled for August 3, 2010 at 10:00 am. Bidders attending the meeting shall assemble in the J.T. Johnson Conference Room located on the second floor of Building 2, at the Gus R Douglass Agricultural Center at Guthrie. All interested parties are required to attend this meeting. Failure to attend the mandatory pre-bid shall result in disqualification of the bid. No one person may represent more than one bidder. An attendance sheet will be made available for all attendees, as the official document verifying attendance.

The bidder is responsible for ensuring they have completed the information required on the attendance sheet. The WVDA will not assume any responsibility for a bidder's failure to complete the pre-bid attendance sheet. In addition, we request that all potential bidders include their E-mail address and fax number.

All potential bidders are requested to arrive prior to the starting time for the pre-bid. Bidders who arrive late, but prior to the dismissal of the technical portion of the pre-bid, will be permitted to sign in. Bidders, who arrive after conclusion of the technical portion of the pre-bid, but during any subsequent part of the pre-bid, will not be permitted to sign the attendance sheet.

Site Visit:

A site visit to each location shall immediately follow the mandatory pre-bid meeting. After the walk-through, vendors are encouraged to make necessary measurements and calculations for accurate bidding. No other inspection dates will be allowed before the bid submittal date. No allowance will be made subsequently on behalf of the Contractor for any error or negligence on their part in connection with this requirement.

Verbal Communication: Any verbal communication between the vendor and any State personnel is not binding, including that made at the mandatory pre-bid meeting. Only information issued in writing and added to the RFQ specifications by official written addendum is binding.

Bidder's formal questions must be submitted in writing to the WV Department of Administration, Purchasing Division by August 8, 2011 at the close of business.

SCOPE OF WORK:

- Provide documentation for this project's energy savings and emissions reductions.
- Replace seven (7) HVAC systems with new energy efficient equipment, as described herein
- Associated work will include the following: adapting new equipment to current duct work; re-piping gas and air-conditioning lines; re-piping new vent lines; performing modifications to current ventilation systems to meet existing conditions; utilizing current electrical distribution panels and disconnects; and, adding, as needed, new electrical circuits and disconnects to meet the demands of the new equipment.
- Each building site shall have access during the course of this work. Work will be coordinated with the WVDA Project Coordinator, to minimize potential disruption.

Notice to Proceed: this contract is to be performed within thirty (30) calendar days after the notice to proceed is received. The WVDA will issue a written notice to proceed to the successful vendor.

GENERAL CONDITIONS:

I. BID SUBMITTALS

This project is funded by the American Recovery and Reinvestment Act (ARRA) of 2009. The requirements of this Act are listed in the **"ARRA Special Provision Attachment."** Bidders must submit with their bid the form **"ARRA Bid Verification Form."** The items checked apply to this project. This form must be signed, verifying the bidder understands and accepts these requirements.

A. Bidders must submit their bid on the attached bid form. This project will be awarded intact to one vendor only. The **WVDA Bid Form** contains seven separate options for bid. Budgeting constraints will dictate if some or all options are chosen. This bid will be awarded to the bidder with the lowest TOTAL BID PACKAGE for all options, even though we may not choose some options.

B. Any Contractor who intends to submit a bid using mechanical equipment other than the listed manufacturer's equipment, known as "or equal," must submit detailed specifications from the manufacturer's published specification sheet for the owner's review. Incomplete data from the bidder may result in disqualifications of the bid. The owner may request additional information from the Contractor for the purpose of determining if the "or equal" submittal meets the bid requirements. The Bidder has 48-hours upon request of additional information to comply with said request.

C. The model/brand specifications named herein establish the acceptable level of quality only and are not intended to reflect a preference or favor any particular brand or vendor. Vendors who are bidding alternates should so state and include pertinent literature and specifications. Failure to provide information for any alternates may be grounds for rejection of the bid. The State reserves the right to waive minor irregularities in bids or specification in accordance with section 148-1-4 (F) of the West Virginia Legislative and Regulations.

D. If the Contractor submits a bid using mechanical equipment other than the listed manufacturer's equipment, known as "or equal," the mechanical equipment must be compatible.
E. Bidder must submit a letter of certification with their bid from the equipment manufacturer that certifies the Contractor is approved, authorized, or licensed by the mechanical equipment manufacturer to receive the manufacturer's warranty.
F. Bidders must submit any sub-contractors used for this project for WVDA approval. Submit the Companies name, Tax ID number, and WV contractor's license number.

II. SUCCSESSFULL BIDDERS SUBMITALS AND RESPONSIBILITIES

A. West Virginia State Code 21-11-2 requires that all persons desiring to perform contracting work in this State must be licensed. The West Virginia contractors Licensing Board is empowered to issue the contractor's license. Applications for a contractor license may be made by contacting the West Virginia Division of Labor, Capitol Complex, Building 3, Room 319, Charleston, WV 25305; Telephone: (304) 558-7890.
B. The successful bidder will be required to furnish a copy of their contractor's license prior to issuance of a purchase order/contract.
C. No work will begin on this project prior to receipt of the signed purchase order and written "Notice-to-Proceed" Letter from the WVDA.
D. Workers' Compensation: vendor is required to provide a certificate from Workers' Compensation if successful.
E. This project is a prevailing wage project and Contractors must pay the higher of the two wages: Davis-Bacon vs. State prevailing wage rates based in Kanawha County, WV.
F. Contractors and subcontractors shall pay workers weekly and submit weekly certified payroll records with **original signatures** to the West Virginia Department of Agriculture.
G. WVDA reserves the right to require form WH-347 be used for the weekly payroll submittals. If other forms are used then they must be approved by the WV Division of Labor. The WH-347 form may be downloaded at *http://www.dol.gov/whd/programs/dbra/wh347.htm*
H. A DAVIS-BACON wage poster shall be placed on the job site in a prominent and accessible place where it can be seen by the workers. Posted in the service truck, at the job site, for all employees to see daily, is an acceptable practice. The following name and contact information must appear on Davis-Bacon posters for this ARRA project:

U.S Department of Labor, Wage and Hour
Doug Stacy, field agent
(304) 347-5206

I. The Whistleblower Poster must be displayed with the Davis-Bacon poster. It is downloaded at http://www.recovery.gov/Contact/ReportFraud/Documents/WhistleblowerPoster.pdf
J. This project must use American iron, steel, or manufactured goods as required by the BUY AMERICAN ACT.
   1. Contractor must submit a bill of material from the manufacturer indicating country of origin.
   2. WVDA's approval of materials does not supersede the BUY AMERICAN ACT.

3. A Desk Guide to the Buy American Provisions of the American Recovery and Reinvestment Act of the 2009 is downloaded at : http://www1.eere.energy.gov/recovery/pdfs/buy_american_desk_guide.pdf

K. The Contractor will procure all necessary permits and licenses to comply with all applicable laws, Federal, State, or municipal, along with all regulations and ordinances of any regulating body.

L. All employees being utilized by the Contractor must sign in daily on a sign-in-log located onsite at the Inwood Market Office.

M. Contractor will supply all tools, tool accessories, personal safety equipment, and supplies necessary to execute the responsibilities of this Contract.

N. Contractor will be responsible for all mileage and travel costs, including travel time, associated with the performance of this Contract.

O. Any damage to WVDA property from misuse or abuse by the Contractor or by their workers shall be repaired or replaced by the contactor, at no expense to the owner.

P. Any and all work to be performed to successfully execute the terms of this Contract by a third party or sub-contractor, must be pre-approved by the WVDA or their Representative. All such work, after WVDA's approval, will remain the sole responsibility of the successful Bidder/Contractor with regard to all labor, materials, fees associated with the sub-contracting and any/all associated responsibilities. Under no circumstances will the Contractor transfer responsibility for any work, as described herein, by a third party, or sub-contractor.

Q. Upon project's completion, and before final invoicing, the Contractor must submit prepared documentation for the WVDA submittal to the U.S. Department of Energy (DOE). This must include data for this project's energy savings and emissions reductions utilizing the following criteria:

1. Energy Savings:
   1. Calculate the annual electricity consumption for the existing equipment in MWh based on the WVDA monthly load data.
   2. Calculate the annual electricity consumption for the new equipment in MWh based on the WVDA monthly load data.
   3. Annual reduction in electricity consumption measured in MWh
   4. Annual reduction in electricity demand measured in MW
2. Emissions Reductions:
   1. Calculate the annual greenhouse gases produced for the existing equipment in CO_2 based on the WVDA monthly load data.
   2. Calculate the annual greenhouse gases produced for the new equipment in CO_2 based on the WVDA monthly load data.
   3. Annual amount of greenhouse gases reduced measured in CO_2
   4. Annual amount of criteria air pollutants reduced measured in Tons

R. Contractor will furnish any incidental work, materials, labor and equipment that are necessary to complete the project, even if such incidental works are not explicitly included in the Contract documents.

III. PRE-CONSTRUCTION MEETING

A. After the Notice-to-Proceed is issued, the Contractor must meet no later than seven (7) calendar days with the WVDA contact for a pre-construction meeting.

B. The Contractor shall submit at the Pre-Construction meeting, a list of employees designated to work on this project and a project work schedule. Any changes thereafter must be submitted to the WVDA contact.

IV. GENERAL SPECIFICATIONS

A. Gas furnaces must be rated 95% efficient or greater.

B. Air Conditioning units must be rated 14.5 SEER or greater and utilize R-410 refrigerant.

C. All equipment shall be compatible with existing ductwork.

D. Condensing units on all locations except 18 Anna Lee Circle may be installed on the existing pads. 18 Anna Lee Circle condensing unit location will be marked with a white painted stake.

E. All new condensing units shall have four pump ups secured to each condensing unit. Pump ups are to be at least 3 inches in height.

F. All condensing units shall have crankcase heaters installed by the manufacturer or the contractor.

G. Contractor shall remove all non-retained HVAC units and associated materials and dispose of them in a responsible and legal manner. Owner will tag which systems they will retain.

H. The WVDA will retain all condensing units, evaporators and old copper piping.

I. Refrigerant from existing units shall be removed and disposed of in the proper environmental manner.

J. Gas furnace and air conditioning equipment must be from the same manufacturer and meet manufacturer's specifications for compatibility.

K. New filter rack(s) shall be installed in easily serviceable locations. Filters shall be installed in standard sizes, disposable, and of a pleated style.

L. Existing electric supply to the units may be utilized. Contractor may use the existing disconnects for condensing units. All exterior electric circuits from disconnect to the condensing unit, both power and control, shall be installed using water-tight connections and enclosures.

M. Furnaces shall have new electrical disconnects, of the appropriate size, and shall be mounted within sight of Mechanical Equipment.

N. Install and seal a floor base between the Cased Coil and the Concrete Floor. The floor base must hold the full weight of the furnace and be a minimum of 8 inches in height.

O. The new condensate pump shall be installed and piped to an open drain. The top of the drain shall be a minimum of 2 feet off the concrete floor and within view of the front of the furnace. The open drain can be plumbed to the tub overflow pipe behind the tub which is behind the new furnace. The 3/8 flex discharge off the pump must discharge into the open drain.

   Follow the published manufacturer's installation instructions.

P. Single phase condensing units must be compatible with the existing electric voltages. **240V 1 Phase.**

V. EQUIPMENT SPECIFICATIONS

A. Replace existing gas furnace with 70,000 to 80,000 BTU input gas furnace. Contractor may use Goodman brand Model #GCH-95703, YORK brand Model #TG9S080B12MP11, or equal.
B. Replace existing AC case evaporator coil with Goodman Model #CAPF3743C A -Coil with Thermostatic Expansion Valve Model Kit #TX3N4, YORK brand Model #FC43B3XN1 A-Coil with Thermostatic Expansion Valve Kit Model #S1-1TVM4G1, or equal.
C. Replace the existing AC condensing unit with a Goodman brand Model #SSX14036, YORK brand Model #YCJF36S41S1 or equal.
D. Replace outdoor disconnects if needed with breaker type disconnects Eaton brand Model #DPB222R or equal.
E. Install replacement condensate pumps with Little Giant Model #VCMA-20 Series or equal.
F. Utilize existing 24volt digital thermostats.

VI. PRODUCT DELIVERY, STORAGE AND HANDLING

A. Materials are to be delivered to the job site in the manufacturer's original, unopened containers or wrappings with the manufacturer's name, brand name and installation instructions intact and legible.
B. Contractor will comply with the manufacturer's written instructions for proper material storage.
C. Any materials which are found to be damaged shall be removed and replaced at the Contractor's expense.

VII. USE OF PROPERTY

A. The Owner will provide normal electrical service, currently installed for the use of the Contractor. However, the Owner provides no guarantee or warranty as to the system's condition or capabilities. The Contractor shall assure themselves that the system is adequate for their requirements or supply additional, temporary utility services at their own expense.
B. A trailer or temporary storage building may be set on the site by the Contractor for all equipment and tools. The location must be approved by the WVDA contact. The Contractor is responsible for all tools, equipment and materials.
C. The Owner agrees to provide a storage site for new equipment seven (7) days prior to installation.
D. Work must take place between 8:00 a.m. and 4:00 p.m. Monday through Friday. Any work outside those times must have prior approval by the WVDA contact. Prior approval is to allow WVDA to re-schedule personal for job sit oversight. No holiday or weekend work will be permitted without prior approval by the WVDA contact.
E. The Contractor will be responsible to barricade areas as needed for safety.
F. The Contractor will perform all work and procedures, as required by all applicable federal, state and local rules and regulations.
G. Each HVAC system changed out, shall take place in a timely fashion. HVAC systems shut down for more than one day (24 hours) will need prior approval, scheduled through the WVDA contact.

H. The Contractor will be responsible for the removal of all waste and debris on a daily basis and may furnish a dumpster for refuse and related rubbish while performing the work. Contractor should strive to contain dust and debris within the immediate area of work, in order to keep debris from spreading throughout the buildings.

I. The Contractor will be responsible for the provision and maintenance of portable toilets or their equal. In place of portable toilets, the Contractor and their employees may use Building 17's facilities during normal working hours, from 8:00 a.m. to 6:00 p.m.

VIII. WARRANTY

A. Manufacturer's warranty: 10 years on parts.

B. Contractor's warranty: All installation of equipment must include a 1-year warranty on labor.

IX. PROJECT BILLING AND INSPECTION

A. The Successful bidder must submit the following prior to final inspection:
   1. Installation documentation
   2. Equipment specification sheets for all equipment and controls
   3. Completed Manufacturer's written warranties
   4. Bill of materials containing items and the country of origin

B. Each HVAC system including controls, new mechanical equipment, and ancillary items, must be fully operational, functioning at its optimum performance level and pass the Owner's inspection prior to invoicing.

C. Invoicing may be submitted by address, so partial payment may occur.

D. Contractor's warranty: All installation of equipment must include a 1-year warranty on labor.

Bidders must submit with their Bid the following documents:

- ✓ **ARRA Bid Verification Form** Pg 20
- ✓ **WVDA Bid Form – ARRA Project 5 HVAC replacement at Guthrie Center residences** Pg 59
- ✓ **Mechanical Equipment specifications - if using manufactures other that models listed herein**
- ✗ **Sub-Contractors – if used**
- ✓ **Purchasing Affidavit** P 63
- **Vendor Preference Certificate – if used** - Purchasing call Kristen
- **WV-96 Agreement Addendum** · Only if asked for.
- **ARRA Special Provision Attachment** Pg 21-58
- **WV-96 Agreement Addendum** Pg 60 Bid Bond

West Virginia Department of Agriculture
Recovery Act Requirements and Verification Form

Project Name: Project 5 HVAC replacements at Guthrie Center residences Date: 8/22/11

Subcontractor Name: Mountain Air Sheet Metal

This project is funded in whole or in part by the American Recovery and Reinvestment Act of 2009 ("Recovery Act"). The following requirements, if checked, apply to this project. By signing and returning this form you are verifying that you understand and accept these requirements.

"Buy American" Requirements

For definitions of "construction material," "manufactured," "trade agreement countries," and "least-developed countries" see Attachment 2.

___X___ All construction material must be manufactured in the United States

_____ All construction material must be manufactured in the United States or a trade agreement country

_____ All construction material must be manufactured in the United States, a trade agreement country, or a least-developed country

List below any products that do not meet the above requirements. Attach separate sheet if necessary:

_____

_____

_____

Prevailing Wage Requirement

___X___ All laborers and mechanics must be paid prevailing wage in accordance with the Davis-Bacon Act

Reporting Requirements

_____ The information in Attachment 1 must be filled out and returned with this form

Signed _____
Signature of Authorized Official

By Holden Eads
Type Name of Authorized Official

ARRA Special Provision Attachment

SUBGRANT FLOW DOWN PROVISIONS FOR WAP AND SEP FINANCIAL ASSISTANCE AWARDS

Resolution of Conflicting Conditions

Statement of Federal Stewardship

Site Visits

Reporting Requirements

Publications

Federal, State, and Municipal Requirements

Intellectual Property Provisions and Contact Information

Lobbying Restrictions

Notice Regarding the Purchase of American-Made Equipment and Products -- Sense of Congress

Decontamination and/or Decommissioning (D&D) Costs

Historic Preservation

Flow Down Terms For ARRA Awards – See Prescriptions for Applicability

Special Provisions Relating To Work Funded Under American Recovery and Reinvestment Act of 2009

Reporting and Registration Requirements Under Section 1512 of The Recovery Act

Required Use of American Iron, Steel, and Manufactured Goods (Covered Under International Agreements)—Section 1605 of the American Recovery and Reinvestment Act of 2009

Wage Rate Requirements Under Section 1606 Of The Recovery Act

Recovery Act Transactions Listed In Schedule of Expenditures of Federal Awards and Recipient Responsibilities For Informing Subrecipients

Davis Bacon Act Requirements (For WAP ARRA Financial Assistance Awards)

Davis Bacon Act and Contract Work Hours and Safety Standards Act (For Use in SEP Financial Assistance Awards)

From 10 CFR 600.236-Procurement

(a) States. When procuring property and services under a grant, a State will follow the same policies and procedures it uses for procurements from its non-Federal funds. The State will ensure that every purchase order or other contract includes any clauses required by Federal statutes and executive orders and their implementing regulations. Other grantees and sub-grantees will follow paragraphs (b) through (i) in this section.

Note: 600.236 (i)-Contract provisions. A grantee's and sub-grantee's contracts MUST contain provisions in paragraph (i) of this section (1) through (13).

10 CFR 600.236 -- http://ecfr.gpoaccess.gov/cgi/t/text/text-idx?c=ecfr&sid=1d87da29f6087f0251f78954c8888ff1&rgn=div8&view=text&node=10:4.0.1.3.9.3.20.23&idno=10

From 10 CFR 600.237-Subgrants

Retention and Access Requirements for Records

http://ecfr.gpoaccess.gov/cgi/t/text/text-idx?type=simple;c=ecfr;cc=ecfr;sid=4c22613d54c8ee557f9dc9d6015ec1c9;idno=10;region=DIV1;q1=600.242;rgn=div8;view=text;node=10%3A4.0.1.3.9.3.20.27

Conform any advances of grant funds to sub-grantees substantially to the same standards of timing and amount that apply to cash advances by Federal agencies (refer state to 10 CFR 600.221(c).

10 CFR 60.221(c) *Advances.* Grantees and subgrantees shall be paid in advance, provided they maintain or demonstrate the willingness and ability to maintain procedures to minimize the time elapsing between the transfer of the funds and their disbursement by the grantee or subgrantee.

SPECIAL TERMS AND CONDITIONS FOR USE IN MOST GRANTS AND COOPERATIVE AGREEMENTS

RESOLUTION OF CONFLICTING CONDITIONS – MANDATORY FLOW DOWN REQUIRED

Any apparent inconsistency between Federal statutes and regulations and the terms and conditions contained in this award must be referred to the DOE Award Administrator for guidance.

AWARD AGREEMENT TERMS AND CONDITIONS

This award/agreement consists of the Grant and Cooperative Agreement cover page, plus the following:
a. Special terms and conditions.
b. Attachments:

Attachment No.	Title
1	Intellectual Property Provisions
2	Federal Assistance Reporting Checklist
3	Budget Pages
4	State Annual File
5	State Master File
6	Wage Determination

c. Applicable program regulations [*Specify*][*Date*]
d. DOE Assistance Regulations, 10 CFR Part 600 at http://ecfr.gpoaccess.gov and if the award is for research and to a university or non-profit, the Research Terms & Conditions and the DOE Agency Specific Requirements at http://www.nsf.gov/bfa/dias/policy/rtc/index.jsp.
e. Application/proposal as approved by DOE.
f. National Policy Assurances to Be Incorporated as Award Terms in effect on date of award at http://management.energy.gov/business_doe/1374.htm.

PAYMENT PROCEDURES - ADVANCES THROUGH THE AUTOMATED STANDARD APPLICATION FOR PAYMENTS (ASAP) SYSTEM

a. Method of Payment. Payment will be made by advances through the Department of Treasury's ASAP system.

b. Requesting Advances. Requests for advances must be made through the ASAP system. You may submit requests as frequently as required to meet your needs to disburse funds for the Federal share of project costs. If feasible, you should time each request so that you receive payment on the same day that you disburse funds for direct project costs and the proportionate share of any allowable indirect costs. If same-day transfers are not feasible, advance payments must be as close as is administratively feasible to actual disbursements.

c. Adjusting payment requests for available cash. You must disburse any funds that are available from repayments to and interest earned on a revolving fund, program income, rebates, refunds, contract settlements, audit recoveries, credits, discounts, and interest earned on any of those funds before requesting additional cash payments from DOE.

d. Payments. All payments are made by electronic funds transfer to the bank account identified on the ASAP Bank Information Form that you filed with the U.S. Department of Treasury.

REBUDGETING AND RECOVERY OF INDIRECT COSTS - REIMBURSABLE INDIRECT COSTS AND FRINGE BENEFITS

a. If actual allowable indirect costs are less than those budgeted and funded under the award, you may use the difference to pay additional allowable direct costs during the project period. If at the completion of the award the Government's share of total allowable costs (i.e., direct and indirect), is less than the total costs reimbursed, you must refund the difference.

b. Recipients are expected to manage their indirect costs. DOE will not amend an award solely to provide additional funds for changes in indirect cost rates. DOE recognizes that the inability to obtain full reimbursement for indirect costs means the recipient must absorb the underrecovery. Such underrecovery may be allocated as part of the organization's required cost sharing.

USE OF PROGRAM INCOME - ADDITION

If you earn program income during the project period as a result of this award, you may add the program income to the funds committed to the award and use it to further eligible project objectives.

STATEMENT OF FEDERAL STEWARDSHIP – MANDATORY FLOW DOWN REQUIRED

DOE will exercise normal Federal stewardship in overseeing the project activities performed under this award. Stewardship activities include, but are not limited to, conducting site visits; reviewing performance and financial reports; providing technical assistance and/or temporary intervention in unusual circumstances to correct deficiencies which develop during the project; assuring compliance with terms and conditions; and reviewing technical performance after project completion to ensure that the award objectives have been accomplished.

SITE VISITS – MANDATORY FLOW DOWN REQUIRED

DOE's authorized representatives have the right to make site visits at reasonable times to review project accomplishments and management control systems and to provide technical assistance, if required. You must provide, and must require your subawardees to provide, reasonable access to facilities, office space, resources, and assistance for the

safety and convenience of the government representatives in the performance of their duties. All site visits and evaluations must be performed in a manner that does not unduly interfere with or delay the work.

REPORTING REQUIREMENTS -- MANDATORY FLOW DOWN REQUIRED

a. Requirements. The reporting requirements for this award are identified on the Federal Assistance Reporting Checklist, DOE F 4600.2, attached to this award. Failure to comply with these reporting requirements is considered a material noncompliance with the terms of the award. Noncompliance may result in withholding of future payments, suspension, or termination of the current award, and withholding of future awards. A willful failure to perform, a history of failure to perform, or unsatisfactory performance of this and/or other financial assistance awards, may also result in a debarment action to preclude future awards by Federal agencies.

b. Dissemination of scientific/technical reports. Scientific/technical reports submitted under this award will be disseminated on the Internet via the DOE Information Bridge (www.osti.gov/bridge), unless the report contains patentable material, protected data, or SBIR/STTR data. Citations for journal articles produced under the award will appear on the DOE Energy Citations Database (www.osti.gov/energycitations).

c. Restrictions. Reports submitted to the DOE Information Bridge must not contain any Protected Personal Identifiable Information (PII), limited rights data (proprietary data), classified information, information subject to export control classification, or other information not subject to release.

PUBLICATIONS – MANDATORY FLOW DOWN REQUIRED

a. You are encouraged to publish or otherwise make publicly available the results of the work conducted under the award.

b. An acknowledgment of Federal support and a disclaimer must appear in the publication of any material, whether copyrighted or not, based on or developed under this project, as follows:

Acknowledgment: "This material is based upon work supported by the Department of Energy under Award Number DE-EE0000095

Disclaimer: "This report was prepared as an account of work sponsored by an agency of the United States Government. Neither the United States Government nor any agency thereof, nor any of their employees, makes any warranty, express or implied, or assumes any legal liability or responsibility for the accuracy, completeness, or usefulness of any information, apparatus, product, or process disclosed, or represents that its use would not infringe privately owned rights. Reference herein to any specific commercial product, process, or service by trade name, trademark, manufacturer, or otherwise does not necessarily constitute or imply its endorsement, recommendation, or favoring by the

United States Government or any agency thereof. The views and opinions of authors expressed herein do not necessarily state or reflect those of the United States Government or any agency thereof."

FEDERAL, STATE, AND MUNICIPAL REQUIREMENTS – MANDATORY FLOW DOWN REQUIRED

You must obtain any required permits and comply with applicable federal, state, and municipal laws, codes, and regulations for work performed under this award.

INTELLECTUAL PROPERTY PROVISIONS AND CONTACT INFORMATION – MANDATORY FLOW DOWN REQUIRED

a. The intellectual property provisions applicable to this award are provided as an attachment to this award or are referenced on the Agreement Face Page. A list of all intellectual property provisions may be found at http://www.gc.doe.gov/financial_assistance_awards.htm.

b. Questions regarding intellectual property matters should be referred to the DOE Award Administrator and the Patent Counsel designated as the service provider for the DOE office that issued the award. The IP Service Providers List is found at http://www.gc.doe.gov/documents/Intellectual_Property_(IP)_Service_Providers_for_Acquisition.pdf

LOBBYING RESTRICTIONS – MANDATORY FLOW DOWN REQUIRED

By accepting funds under this award, you agree that none of the funds obligated on the award shall be expended, directly or indirectly, to influence congressional action on any legislation or appropriation matters pending before Congress, other than to communicate to Members of Congress as described in 18 U.S.C. 1913. This restriction is in addition to those prescribed elsewhere in statute and regulation.

NOTICE REGARDING THE PURCHASE OF AMERICAN-MADE EQUIPMENT AND PRODUCTS -- SENSE OF CONGRESS – MANDATORY FLOW DOWN REQUIRED

It is the sense of the Congress that, to the greatest extent practicable, all equipment and products purchased with funds made available under this award should be American-made.

DECONTAMINATION AND/OR DECOMMISSIONING (D&D) COSTS – MANDATORY FLOW DOWN REQUIRED

Notwithstanding any other provisions of this Agreement, the Government shall not be responsible for or have any obligation to the recipient for (i) Decontamination and/or Decommissioning (D&D) of any of the recipient's facilities, or (ii) any costs which may be incurred by the recipient in connection with the D&D of any of its facilities due to the

performance of the work under this Agreement, whether said work was performed prior to or subsequent to the effective date of this Agreement.

HISTORIC PRESERVATION -- MANDATORY FLOW DOWN REQUIRED

Prior to the expenditure of Federal funds to alter any structure or site, the Recipient is required to comply with the requirements of Section 106 of the National Historic Preservation Act (NHPA), consistent with DOE's 2009 letter of delegation of authority regarding the NHPA. Section 106 applies to historic properties that are listed in or eligible for listing in the National Register of Historic Places. In order to fulfill the requirements of Section 106, the recipient must contact the State Historic Preservation Officer (SHPO), and, if applicable, the Tribal Historic Preservation Officer (THPO), to coordinate the Section 106 review outlined in 36 CFR Part 800. SHPO contact information is available at the following link: http://www.ncshpo.org/find/index.htm. THPO contact information is available at the following link: http://www.nathpo.org/map.html .

Section 110(k) of the NHPA applies to DOE funded activities. Recipients shall avoid taking any action that results in an adverse effect to historic properties pending compliance with Section 106.

Recipients should be aware that the DOE Contracting Officer will consider the recipient in compliance with Section 106 of the NHPA only after the Recipient has submitted adequate background documentation to the SHPO/THPO for its review, and the SHPO/THPO has provided written concurrence to the Recipient that it does not object to its Section 106 finding or determination. Recipient shall provide a copy of this concurrence to the Contracting Officer.

Prescription: This clause must be included in all grants, cooperative agreements and TIAs (new or amended) when funds appropriated under the Recovery Act are obligated to the agreement.

SPECIAL PROVISIONS RELATING TO WORK FUNDED UNDER AMERICAN RECOVERY AND REINVESTMENT ACT OF 2009

Preamble

The American Recovery and Reinvestment Act of 2009, Pub. L. 111-5, (Recovery Act) was enacted to preserve and create jobs and promote economic recovery, assist those most impacted by the recession, provide investments needed to increase economic efficiency by spurring technological advances in science and health, invest in transportation, environmental protection, and other infrastructure that will provide long-term economic benefits, stabilize State and local government budgets, in order to minimize and avoid reductions in essential services and counterproductive State and local tax increases. Recipients shall use grant funds in a manner that maximizes job creation and economic benefit.

The Recipient shall comply with all terms and conditions in the Recovery Act relating generally to governance, accountability, transparency, data collection and resources as specified in Act itself and as discussed below.

Recipients should begin planning activities for their first tier subrecipients, including obtaining a DUNS number (or updating the existing DUNS record), and registering with the Central Contractor Registration (CCR).

Be advised that Recovery Act funds can be used in conjunction with other funding as necessary to complete projects, but tracking and reporting must be separate to meet the reporting requirements of the Recovery Act and related guidance. For projects funded by sources other than the Recovery Act, Contractors must keep separate records for Recovery Act funds and to ensure those records comply with the requirements of the Act.

The Government has not fully developed the implementing instructions of the Recovery Act, particularly concerning specific procedural requirements for the new reporting requirements. The Recipient will be provided these details as they become available. The Recipient must comply with all requirements of the Act. If the recipient believes there is any inconsistency between ARRA requirements and current award terms and conditions, the issues will be referred to the Contracting Officer for reconciliation.

Definitions

For purposes of this clause, Covered Funds means funds expended or obligated from appropriations under the American Recovery and Reinvestment Act of 2009, Pub. L. 111-5. Covered Funds will have special accounting codes and will be identified as Recovery Act funds in the grant, cooperative agreement or TIA and/or modification using Recovery Act funds. Covered Funds must be reimbursed by September 30, 2015.

Non-Federal employer means any employer with respect to covered funds – the contractor, subcontractor, grantee, or recipient, as the case may be, if the contractor, subcontractor, grantee, or recipient is an employer; and any professional membership organization, certification of other professional body, any agent or licensee of the Federal government, or any person acting directly or indirectly in the interest of an employer receiving covered funds; or with respect to covered funds received by a State or local government, the State or local government receiving the funds and any contractor or subcontractor receiving the funds and any contractor or subcontractor of the State or local government; and does not mean any department, agency, or other entity of the federal government.

Recipient means any entity that receives Recovery Act funds directly from the Federal government (including Recovery Act funds received through grant, loan, or contract) other than an individual and includes a State that receives Recovery Act Funds.

Special Provisions

A. Flow Down Requirement

Recipients must include these special terms and conditions in any subaward.

B. Segregation of Costs

Recipients must segregate the obligations and expenditures related to funding under the Recovery Act. Financial and accounting systems should be revised as necessary to segregate, track and maintain these funds apart and separate from other revenue streams. No part of the funds from the Recovery Act shall be commingled with any other funds or used for a purpose other than that of making payments for costs allowable for Recovery Act projects.

C. Prohibition on Use of Funds

None of the funds provided under this agreement derived from the American Recovery and Reinvestment Act of 2009, Pub. L. 111-5, may be used by any State or local government, or any private entity, for any casino or other gambling establishment, aquarium, zoo, golf course, or swimming pool.

D. Access to Records

With respect to each financial assistance agreement awarded utilizing at least some of the funds appropriated or otherwise made available by the American Recovery and Reinvestment Act of 2009, Pub. L. 111-5, any representative of an appropriate inspector general appointed under section 3 or 8G of the Inspector General Act of 1988 (5 U.S.C. App.) or of the Comptroller General is authorized –

(1) to examine any records of the contractor or grantee, any of its subcontractors or subgrantees, or any State or local agency administering such contract that pertain to, and involve transactions relation to, the subcontract, subcontract, grant, or subgrant; and

(2) to interview any officer or employee of the contractor, grantee, subgrantee, or agency regarding such transactions.

E. Publication

An application may contain technical data and other data, including trade secrets and/or privileged or confidential information, which the applicant does not want disclosed to the public or used by the Government for any purpose other than the application. To protect such data, the applicant should specifically identify each page including each line or paragraph thereof containing the data to be protected and mark the cover sheet of the application with the following Notice as well as referring to the Notice on each page to which the Notice applies:

Notice of Restriction on Disclosure and Use of Data

The data contained in pages ---- of this application have been submitted in confidence and contain trade secrets or proprietary information, and such data shall be used or disclosed only for evaluation purposes, provided that if this applicant receives an award as a result of or in connection with the submission of this application, DOE shall have the right to use or disclose the data here to the extent provided in the award. This restriction does not limit the Government's right to use or disclose data obtained without restriction from any source, including the applicant.

Information about this agreement will be published on the Internet and linked to the website www.recovery.gov, maintained by the Accountability and Transparency Board. The Board may exclude posting contractual or other information on the website on a case-by-case basis when necessary to protect national security or to protect information that is not subject to disclosure under sections 552 and 552a of title 5, United States Code.

F. Protecting State and Local Government and Contractor Whistleblowers.

The requirements of Section 1553 of the Act are summarized below. They include, but are not limited to:

Prohibition on Reprisals: An employee of any non-Federal employer receiving covered funds under the American Recovery and Reinvestment Act of 2009, Pub. L. 111-5, may not be discharged, demoted, or otherwise discriminated against as a reprisal for disclosing, including a disclosure made in the ordinary course of an employee's duties, to the Accountability and Transparency Board, an inspector general, the Comptroller General, a member of Congress, a State or Federal regulatory or law enforcement agency, a person with supervisory authority over the employee (or other person working for the employer who has the authority to investigate, discover or terminate misconduct, a court or grant jury, the head of a Federal agency, or their representatives information that the employee believes is evidence of:

- gross management of an agency contract or grant relating to covered funds;
- a gross waste of covered funds
- a substantial and specific danger to public health or safety related to the implementation or use of covered funds;
- an abuse of authority related to the implementation or use of covered funds; or
- as violation of law, rule, or regulation related to an agency contract (including the competition for or negotiation of a contract) or grant, awarded or issued relating to covered funds.

Agency Action: Not later than 30 days after receiving an inspector general report of an alleged reprisal, the head of the agency shall determine whether there is sufficient basis to conclude that the non-Federal employer has subjected the employee to a prohibited reprisal. The agency shall either issue an order denying relief in whole or in part or shall take one or more of the following actions:

- Order the employer to take affirmative action to abate the reprisal.
- Order the employer to reinstate the person to the position that the person held

before the reprisal, together with compensation including back pay, compensatory damages, employment benefits, and other terms and conditions of employment that would apply to the person in that position if the reprisal had not been taken.
• Order the employer to pay the employee an amount equal to the aggregate amount of all costs and expenses (including attorneys' fees and expert witnesses' fees) that were reasonably incurred by the employee for or in connection with, bringing the complaint regarding the reprisal, as determined by the head of a court of competent jurisdiction.

Nonenforceablity of Certain Provisions Waiving Rights and remedies or Requiring Arbitration: Except as provided in a collective bargaining agreement, the rights and remedies provided to aggrieved employees by this section may not be waived by any agreement, policy, form, or condition of employment, including any predispute arbitration agreement. No predispute arbitration agreement shall be valid or enforceable if it requires arbitration of a dispute arising out of this section.

Requirement to Post Notice of Rights and Remedies: Any employer receiving covered funds under the American Recovery and Reinvestment Act of 2009, Pub. L. 111-5, shall post notice of the rights and remedies as required therein. (Refer to section 1553 of the American Recovery and Reinvestment Act of 2009, Pub. L. 111-5, www.Recovery.gov, for specific requirements of this section and prescribed language for the notices.).

G. Request for Reimbursement (this version is included in WAP/SEP awards with states)

RESERVED

H. False Claims Act

Recipient and sub-recipients shall promptly refer to the DOE or other appropriate Inspector General any credible evidence that a principal, employee, agent, contractor, sub-grantee, subcontractor or other person has submitted a false claim under the False Claims Act or has committed a criminal or civil violation of laws pertaining to fraud, conflict or interest, bribery, gratuity or similar misconduct involving those funds.

I. Information in supporting of Recovery Act Reporting

Recipient may be required to submit backup documentation for expenditures of funds under the Recovery Act including such items as timecards and invoices. Recipient shall provide copies of backup documentation at the request of the Contracting Officer or designee.

J. Availability of Funds

Funds appropriated under the Recovery Act and obligated to this award are available for reimbursement of costs until September 30, 2015.

Prescription: The following award term shall be used to implement the recipient reporting and registration requirements in the Recovery Act section 1512.

REPORTING AND REGISTRATION REQUIREMENTS UNDER SECTION 1512 OF THE RECOVERY ACT

(a) This award requires the recipient to complete projects or activities which are funded under the American Recovery and Reinvestment Act of 2009 (Recovery Act) and to report on use of Recovery Act funds provided through this award. Information from these reports will be made available to the public.

(b) The reports are due no later than ten calendar days after each calendar quarter in which the recipient receives the assistance award funded in whole or in part by the Recovery Act.

(c) Recipients and their first-tier recipients must maintain current registrations in the Central Contractor Registration (http://www.ccr.gov) at all times during which they have active federal awards funded with Recovery Act funds. A Dun and Bradstreet Data Universal Numbering System (DUNS) Number (http://www.dnb.com) is one of the requirements for registration in the Central Contractor Registration.

(d) The recipient shall report the information described in section 1512(c) of the Recovery Act using the reporting instructions and data elements that will be provided online at http://www.FederalReporting.gov and ensure that any information that is pre-filled is corrected or updated as needed.

Prescription: When awarding Recovery Act funds for construction, alteration, maintenance, or repair of a public building or public work and the total project value is estimated less than $7,443,000, the agency shall use this award term.

REQUIRED USE OF AMERICAN IRON, STEEL, AND MANUFACTURED GOODS -- SECTION 1605 OF THE AMERICAN RECOVERY AND REINVESTMENT ACT OF 2009

(a) Definitions. As used in this award term and condition--

(1) Manufactured good means a good brought to the construction site for incorporation into the building or work that has been--

(i) Processed into a specific form and shape; or

(ii) Combined with other raw material to create a material that has different properties than the properties of the individual raw materials.

(2) Public building and public work means a public building of, and a public work of, a governmental entity (the United States; the District of Columbia; commonwealths, territories, and minor outlying islands of the United States; State and local governments; and multi-State, regional, or interstate entities which have governmental functions). These buildings and works may include, without limitation, bridges, dams, plants, highways, parkways, streets, subways, tunnels, sewers, mains, power lines, pumping stations, heavy

generators, railways, airports, terminals, docks, piers, wharves, ways, lighthouses, buoys, jetties, breakwaters, levees, and canals, and the construction, alteration, maintenance, or repair of such buildings and works.

(3) Steel means an alloy that includes at least 50 percent iron, between .02 and 2 percent carbon, and may include other elements.

(b) Domestic preference. (1) This award term and condition implements Section 1605 of the American Recovery and Reinvestment Act of 2009 (Recovery Act) (Pub. L. 111--5), by requiring that all iron, steel, and manufactured goods used in the project are produced in the United States except as provided in paragraph (b)(3) and (b)(4) of this section and condition.

(2) This requirement does not apply to the material listed by the Federal Government as follows:

_____

[Award official to list applicable excepted materials or indicate "none"]

(3) The award official may add other iron, steel, and/or manufactured goods to the list in paragraph (b)(2) of this section and condition if the Federal Government determines that--

(i) The cost of the domestic iron, steel, and/or manufactured goods would be unreasonable. The cost of domestic iron, steel, or manufactured goods used in the project is unreasonable when the cumulative cost of such material will increase the cost of the overall project by more than 25 percent;

(ii) The iron, steel, and/or manufactured good is not produced, or manufactured in the United States in sufficient and reasonably available quantities and of a satisfactory quality; or

(iii) The application of the restriction of section 1605 of the Recovery Act would be inconsistent with the public interest.

(c) Request for determination of inapplicability of Section 1605 of the Recovery Act . (1)(i) Any recipient request to use foreign iron, steel, and/or manufactured goods in accordance with paragraph (b)(3) of this section shall include adequate information for Federal Government evaluation of the request, including--

(A) A description of the foreign and domestic iron, steel, and/or manufactured goods;

(B) Unit of measure;

(C) Quantity;

(D) Cost;

(E) Time of delivery or availability;

(F) Location of the project;

(G) Name and address of the proposed supplier; and

(H) A detailed justification of the reason for use of foreign iron, steel, and/or manufactured goods cited in accordance with paragraph (b)(3) of this section.

(ii) A request based on unreasonable cost shall include a reasonable survey of the market and a completed cost comparison table in the format in paragraph (d) of this section.

(iii) The cost of iron, steel, and/or manufactured goods material shall include all delivery costs to the

construction site and any applicable duty.

(iv) Any recipient request for a determination submitted after Recovery Act funds have been obligated for a project for construction, alteration, maintenance, or repair shall explain why the recipient could not reasonably foresee the need for such determination and could not have requested the determination before the funds were obligated. If the recipient does not submit a satisfactory explanation, the award official need not make a determination.

(2) If the Federal Government determines after funds have been obligated for a project for construction, alteration, maintenance, or repair that an exception to section 1605 of the Recovery Act applies, the award official will amend the award to allow use of the foreign iron, steel, and/or relevant manufactured goods. When the basis for the exception is nonavailability or public interest, the amended award shall reflect adjustment of the award amount, redistribution of budgeted funds, and/or other actions taken to cover costs associated with acquiring or using the foreign iron, steel, and/or relevant manufactured goods. When the basis for the exception is the unreasonable cost of the domestic iron, steel, or manufactured goods, the award official shall adjust the award amount or redistribute budgeted funds by at least the differential established in 2 CFR 176.110(a).

(3) Unless the Federal Government determines that an exception to section 1605 of the Recovery Act applies, use of foreign iron, steel, and/or manufactured goods is noncompliant with section 1605 of the American Recovery and Reinvestment Act.

(d) Data. To permit evaluation of requests under paragraph (b) of this section based on unreasonable cost, the Recipient shall include the following information and any applicable supporting data based on the survey of suppliers:

Foreign and Domestic Items Cost Comparison

Description	Unit of measure	Quantity	Cost (dollars)*
Item 1:			
Foreign steel, iron, or manufactured good	_____	_____	_____
Domestic steel, iron, or manufactured good	_____	_____	_____
Item 2:			
Foreign steel, iron, or manufactured good	_____	_____	_____
Domestic steel, iron, or manufactured good	_____	_____	_____

[List name, address, telephone number, email address, and contact for suppliers surveyed. Attach copy of response; if oral, attach summary.]

[Include other applicable supporting information.]
[*Include all delivery costs to the construction site.]

Prescription: When awarding Recovery Act funds for construction, alteration, maintenance, or repair of a public building or public work with a total project value over $7,443,000 that involves iron, steel, and/or manufactured goods materials covered under international agreements, the agency shall use this award term.

REQUIRED USE OF AMERICAN IRON, STEEL, AND MANUFACTURED GOODS (COVERED UNDER INTERNATIONAL AGREEMENTS)—SECTION 1605 OF THE AMERICAN RECOVERY AND REINVESTMENT ACT OF 2009

(a) *Definitions.* As used in this award term and condition—

Designated country —(1) A World Trade Organization Government Procurement Agreement country (Aruba, Austria, Belgium, Bulgaria, Canada, Cyprus, Czech Republic, Denmark, Estonia, Finland, France, Germany, Greece, Hong Kong, Hungary, Iceland, Ireland, Israel, Italy, Japan, Korea (Republic of), Latvia, Liechtenstein, Lithuania, Luxembourg, Malta, Netherlands, Norway, Poland, Portugal, Romania, Singapore, Slovak Republic, Slovenia, Spain, Sweden, Switzerland, and United Kingdom;

(2) A Free Trade Agreement (FTA) country (Australia, Bahrain, Canada, Chile, Costa Rica, Dominican Republic, El Salvador, Guatemala, Honduras, Israel, Mexico, Morocco, Nicaragua, Oman, Peru, or Singapore); or

(3) A United States-European Communities Exchange of Letters (May 15, 1995) country: Austria, Belgium, Bulgaria, Cyprus, Czech Republic, Denmark, Estonia, Finland, France, Germany, Greece, Hungary, Ireland, Italy, Latvia, Lithuania, Luxembourg, Malta, Netherlands, Poland, Portugal, Romania, Slovak Republic, Slovenia, Spain, Sweden, and United Kingdom.

Designated country iron, steel, and/or manufactured goods —(1) Is wholly the growth, product, or manufacture of a designated country; or

(2) In the case of a manufactured good that consist in whole or in part of materials from another country, has been substantially transformed in a designated country into a new and different manufactured good distinct from the materials from which it was transformed.

Domestic iron, steel, and/or manufactured good —(1) Is wholly the growth, product, or manufacture of the United States; or

(2) In the case of a manufactured good that consists in whole or in part of materials from another country, has been substantially transformed in the United States into a new and different manufactured good distinct from the materials from which it was transformed. There is no requirement with regard to the origin of components or subcomponents in manufactured goods or products, as long as the manufacture of the goods occurs in the United States.

Foreign iron, steel, and/or manufactured good means iron, steel and/or manufactured good that is not domestic or designated country iron, steel, and/or manufactured good.

Manufactured good means a good brought to the construction site for incorporation into the building or work that has been—

(1) Processed into a specific form and shape; or

(2) Combined with other raw material to create a material that has different properties than the properties of the individual raw materials.

Public building and *public work* means a public building of, and a public work of, a governmental entity (the United States; the District of Columbia; commonwealths, territories, and minor outlying islands of the United States; State and local governments; and multi-State, regional, or interstate entities which have governmental functions). These buildings and works may include, without limitation, bridges, dams, plants, highways, parkways, streets, subways, tunnels, sewers, mains, power lines, pumping stations, heavy generators, railways, airports, terminals, docks, piers, wharves, ways, lighthouses, buoys, jetties, breakwaters, levees, and canals, and the construction, alteration, maintenance, or repair of such buildings and works.

Steel means an alloy that includes at least 50 percent iron, between .02 and 2 percent carbon, and may include other elements.

(b) *Iron, steel, and manufactured goods.* (1) The award term and condition described in this section implements—

(i) Section 1605(a) of the American Recovery and Reinvestment Act of 2009 (Pub. L. 111–5) (Recovery Act), by requiring that all iron, steel, and manufactured goods used in the project are produced in the United States; and

(ii) Section 1605(d), which requires application of the Buy American requirement in a manner consistent with U.S. obligations under international agreements. The restrictions of section 1605 of the Recovery Act do not apply to designated country iron, steel, and/or manufactured goods. The Buy American requirement in section 1605 shall not be applied where the iron, steel or manufactured goods used in the project are from a Party to an international agreement that obligates the recipient to treat the goods and services of that Party the same as domestic goods and services. This obligation shall only apply to projects with an estimated value of $7,443,000 or more.

(2) The recipient shall use only domestic or designated country iron, steel, and manufactured goods in performing the work funded in whole or part with this award, except as provided in paragraphs (b)(3) and (b)(4) of this section.

(3) The requirement in paragraph (b)(2) of this section does not apply to the iron, steel, and manufactured goods listed by the Federal Government as follows:

_____

[*Award official to list applicable excepted materials or indicate "none"*]

(4) The award official may add other iron, steel, and manufactured goods to the list in paragraph (b)(3) of this section if the Federal Government determines that—

(i) The cost of domestic iron, steel, and/or manufactured goods would be unreasonable. The cost of domestic iron, steel, and/or manufactured goods used in the project is unreasonable when the cumulative cost of such material will increase the overall cost of the project by more than 25 percent;

(ii) The iron, steel, and/or manufactured good is not produced, or manufactured in the United States in sufficient and reasonably available commercial quantities of a satisfactory quality; or

(iii) The application of the restriction of section 1605 of the Recovery Act would be inconsistent with the public interest.

(c) *Request for determination of inapplicability of section 1605 of the Recovery Act or the Buy American Act.* (1)(i) Any recipient request to use foreign iron, steel, and/or manufactured goods in accordance with paragraph (b)(4) of this section shall include adequate information for Federal Government evaluation of the request, including—

(A) A description of the foreign and domestic iron, steel, and/or manufactured goods;

(B) Unit of measure;

(C) Quantity;

(D) Cost;

(E) Time of delivery or availability;

(F) Location of the project;

(G) Name and address of the proposed supplier; and

(H) A detailed justification of the reason for use of foreign iron, steel, and/or manufactured goods cited in accordance with paragraph (b)(4) of this section.

(ii) A request based on unreasonable cost shall include a reasonable survey of the market and a completed cost comparison table in the format in paragraph (d) of this section.

(iii) The cost of iron, steel, or manufactured goods shall include all delivery costs to the construction site and any applicable duty.

(iv) Any recipient request for a determination submitted after Recovery Act funds have been obligated for a project for construction, alteration, maintenance, or repair shall explain why the recipient could not reasonably foresee the need for such determination and could not have requested the determination before the funds were obligated. If the recipient does not submit a satisfactory explanation, the award official need not make a determination.

(2) If the Federal Government determines after funds have been obligated for a project for construction, alteration, maintenance, or repair that an exception to section 1605 of the Recovery Act applies, the award official will amend the award to allow use of the foreign iron, steel, and/or relevant manufactured goods. When the basis for the exception is nonavailability or public interest, the amended award shall reflect adjustment of the award amount, redistribution of budgeted funds, and/or other appropriate actions taken to cover costs associated with acquiring or using the foreign iron, steel, and/or relevant manufactured goods.. When the basis for the exception is the unreasonable cost of the domestic iron, steel, or manufactured goods, the award official shall adjust the award amount or redistribute budgeted funds, as appropriate, by at least the differential established in 2 CFR 176.110(a).

(3) Unless the Federal Government determines that an exception to section 1605 of the Recovery Act applies, use of foreign iron, steel, and/or manufactured goods other than designated country iron, steel, and/or manufactured goods is noncompliant with the applicable Act.

(d) *Data.* To permit evaluation of requests under paragraph (b) of this section based on unreasonable cost, the applicant shall include the following information and any applicable supporting data based on the survey of suppliers:

Foreign and Domestic Items Cost Comparison

Description	Unit of measure	Quantity	Cost (dollars)*
Item 1:			
Foreign steel, iron, or manufactured good	_____	_____	_____
Domestic steel, iron, or manufactured good	_____	_____	_____
Item 2:			
Foreign steel, iron, or manufactured good	_____	_____	_____
Domestic steel, iron, or manufactured good	_____	_____	_____

[List name, address, telephone number, email address, and contact for suppliers surveyed. Attach copy of response; if oral, attach summary.]

[Include other applicable supporting information.]

*[*Include all delivery costs to the construction site.]*

Prescription: When issuing announcements or requesting applications for Recovery Act programs or activities that may involve construction, alteration, maintenance, or repair the agency shall use this award term.

WAGE RATE REQUIREMENTS UNDER SECTION 1606 OF THE RECOVERY ACT

(a) Section 1606 of the Recovery Act requires that all laborers and mechanics employed by contractors and subcontractors on projects funded directly by or assisted in whole or in part by and through the Federal Government pursuant to the Recovery Act shall be paid wages at rates not less than those prevailing on projects of a character similar in the locality as determined by the Secretary of Labor in accordance with subchapter IV of chapter 31 of title 40, United States Code.

Pursuant to Reorganization Plan No. 14 and the Copeland Act, 40 U.S.C. 3145, the Department of Labor has issued regulations at 29 CFR parts 1, 3, and 5 to implement the Davis-Bacon and related Acts. Regulations in 29 CFR 5.5 instruct agencies concerning application of the standard Davis-Bacon contract clauses set forth in that section. Federal agencies providing grants, cooperative agreements, and loans under the Recovery Act shall ensure that the standard Davis-Bacon contract clauses found in 29 CFR 5.5(a) are incorporated in any resultant covered contracts that are in excess of $2,000 for construction, alteration or repair (including painting and decorating).

(b) For additional guidance on the wage rate requirements of section 1606, contact your awarding agency. Recipients of grants, cooperative agreements and loans should direct their initial inquiries concerning the application of Davis-Bacon requirements to a particular federally assisted project to the Federal agency funding the project. The Secretary of Labor retains final coverage authority under Reorganization Plan Number 14.

Prescription: The award term described in this section shall be used by agencies to clarify recipient responsibilities regarding tracking and documenting Recovery Act expenditures.

RECOVERY ACT TRANSACTIONS LISTED IN SCHEDULE OF EXPENDITURES OF FEDERAL AWARDS AND RECIPIENT RESPONSIBILITIES FOR INFORMING

(a) To maximize the transparency and accountability of funds authorized under the American Recovery and Reinvestment Act of 2009 (Pub. L. 111--5) (Recovery Act) as required by Congress and in accordance with 2 CFR 215.21 "Uniform Administrative Requirements for Grants and Agreements" and OMB Circular A--102 Common Rules provisions, recipients agree to maintain records that identify adequately the source and application of Recovery Act funds. OMB Circular A--102 is available at http://www.whitehouse.gov/omb/circulars/a102/a102.html.

(b) For recipients covered by the Single Audit Act Amendments of 1996 and OMB Circular A--133, "Audits of States, Local Governments, and Non-Profit Organizations," recipients agree to separately identify the expenditures for Federal awards under the Recovery Act on the Schedule of Expenditures of Federal Awards (SEFA) and the Data

Collection Form (SF--SAC) required by OMB Circular A--133. OMB Circular A--133 is available at http://www.whitehouse.gov/omb/circulars/a133/a133.html. This shall be accomplished by identifying expenditures for Federal awards made under the Recovery Act separately on the SEFA, and as separate rows under Item 9 of Part III on the SF--SAC by CFDA number, and inclusion of the prefix "ARRA-" in identifying the name of the Federal program on the SEFA and as the first characters in Item 9d of Part III on the SF--SAC.

(c) Recipients agree to separately identify to each subrecipient, and document at the time of subaward and at the time of disbursement of funds, the Federal award number, CFDA number, and amount of Recovery Act funds. When a recipient awards Recovery Act funds for an existing program, the information furnished to subrecipients shall distinguish the subawards of incremental Recovery Act funds from regular subawards under the existing program.

(d) Recipients agree to require their subrecipients to include on their SEFA information to specifically identify Recovery Act funding similar to the requirements for the recipient SEFA described above. This information is needed to allow the recipient to properly monitor subrecipient expenditure of ARRA funds as well as oversight by the Federal awarding agencies, Offices of Inspector General and the Government Accountability Office.

Prescription: Include for ARRA Weatherization Assistance Program (WAP) Awards when WAGE RATE REQUIREMENTS UNDER SECTION 1606 OF THE AMERICAN RECOVERY AND REINVESTMENT ACT ("RECOVERY ACT") term is required.

DAVIS BACON ACT REQUIREMENTS

A. Definitions. For purposes of this term, the Contract Work Hours and Safety Standards Act term, and the Recipient Functions term, the following definitions are applicable:

(1) *Award* means the Award by the Department of Energy (DOE) to a Recipient that includes a requirement to comply with the labor standards clauses and wage rate requirements of the Davis-Bacon Act (DBA) for work performed by all laborers and mechanics employed by Subrecipients, Contractors and subcontractors on projects funded by or assisted in whole or in part by and through the Federal Government pursuant to the Recovery Act.

(2) "*Construction, alteration or repair*" means all types of work done by laborers and mechanics employed by the Subrecipient, construction contractor or construction subcontractor on a particular building or work at the site thereof, including without limitation—

(a) Altering, remodeling, installation (if appropriate) on the site of the work of items fabricated off-site;

(b) Painting and decorating; or

(c) Manufacturing or furnishing of materials, articles, supplies, or equipment on the site of the building or work.

(3) *Contract* means a written procurement contract executed by a Subrecipient for the acquisition of

property and services for construction, alteration, and repair under a Subaward. For purposes of these terms, a Contract shall include subcontracts and lower- tier subcontracts under the Contract.

(4) *Contracting Officer* means the DOE official authorized to execute awards on behalf of DOE and who is responsible for the business management and non-program aspects of the financial assistance process.

(5) *Contractor* means an entity that enters into a Contract. For purposes of these terms, Contractor shall include subcontractors and lower-tier subcontractors.

(6) *Recipient* means any entity other than an individual that receives Recovery Act funds in the form of a grant directly from the Federal Government. The term includes the State that receives an Award from DOE and is financially accountable for the use of any DOE funds or property, and is legally responsible for carrying out the terms and conditions of the program and Award.

(7) "*Site of the work*"—

(a) Means—

(i) The physical place or places where the construction called for in the Award, Subaward, or Contract will remain when work on it is completed; and

(ii) Any other site where a significant portion of the building or work is constructed, provided that such site is established specifically for the performance of the project;

(b) Except as provided in paragraph (c) of this definition, the site of the work includes any fabrication plants, mobile factories, batch plants, borrow pits, job headquarters, tool yards, etc., provided—

(1) They are dedicated exclusively, or nearly so, to performance of the project; and

(2) They are adjacent or virtually adjacent to the site of the work as defined in paragraphs (7)(a)(i) or (7)(a)(ii) of this definition; and

(c) Does not include permanent home offices, branch plant establishments, fabrication plants, or tool yards of a Contractor or subcontractor whose locations and continuance in operation are determined wholly without regard to a particular contract or Federal Award or project. In addition, fabrication plants, batch plants, borrow pits, job headquarters, yards, etc., of a commercial or material supplier which are established by a supplier of materials for the project before opening of bids and not on the project site as defined in paragraphs (7)(a)(i) or (7)(a)(ii) of this definition, are not included in the "site of the work." Such permanent, previously established facilities are not a part of the "site of the work" even if the operations for a period of time may be dedicated exclusively or nearly so, to the performance of an Award, Subaward, or Contract.

(8) *Subaward* means an award of financial assistance in the form of money, or property in lieu of money, made under an award by a Recipient to an eligible Subrecipient or by a Subrecipient to a lower-tier subrecipient. The term includes financial assistance when provided by any legal agreement, even if the agreement is called a contract, but does not include the Recipient's procurement of goods and services to carry out the program nor does it include any form of assistance which is excluded from the definition of "Award" above.

(9) *Subrecipient* means a non-Federal entity that expends Federal awards received from a pass-through entity [Recipient] to carry out a Federal program, but does not include an individual that is a beneficiary of such a program. The term includes a Community Action Agency (CAA), local agency, or other entity to which a Subaward under the Award is made by a Recipient that includes a requirement to comply with the labor standards clauses and wage rate requirements of the DBA work performed by all laborers and mechanics employed by contractors and subcontractors on projects funded by or assisted in whole or in part by and through the Federal Government pursuant of the

Recovery Act.

B. Davis-Bacon Act

(1)(a) All laborers and mechanics employed or working upon the site of the work will be paid unconditionally and not less often than once a week, and without subsequent deduction or rebate on any account (except such payroll deductions as are permitted by regulations issued by the Secretary of Labor under the Copeland Act (29 CFR Part 3)), the full amount of wages and bona fide fringe benefits (or cash equivalents thereof) due at time of payment computed at rates not less than those contained in the wage determination of the Secretary of Labor which is attached to the Subaward or Contract and made a part hereof, regardless of any contractual relationship which may be alleged to exist between the Recipient, a Subrecipient, or Contractor and such laborers and mechanics.

(i) Applicable to Recipient Only: Prior to the issuance of the Subaward or Contract, the Recipient shall notify the Contracting Officer of the site of the work in order for the appropriate wage determination to be obtained by the Contracting Officer from the Secretary of Labor.

(ii) If the Subaward or Contract is or has been issued without a wage determination, the Recipient shall notify the Contracting Officer immediately of the site of the work under the Subaward or Contract in order for the appropriate wage determination to be obtained by the Contracting Officer from the Secretary of Labor.

(b) Contributions made or costs reasonably anticipated for bona fide fringe benefits under section 1(b)(2) of the DBA on behalf of laborers or mechanics are considered wages paid to such laborers and mechanics, subject to the provisions of paragraph B(4) below; also, regular contributions made or costs incurred for more than a weekly period (but not less often than quarterly) under plans, funds, or programs which cover the particular weekly period, are deemed to be constructively made or incurred during such period.

(c) Such laborers and mechanics shall be paid not less than the appropriate wage rate and fringe benefits in the wage determination for the classification of work actually performed, without regard to skill, except as provided in the paragraph entitled Apprentices and Trainees. Laborers or mechanics performing work in more than one classification may be compensated at the rate specified for each classification for the time actually worked therein; provided that the employer's payroll records accurately set forth the time spent in each classification in which work is performed.

(d) The wage determination (including any additional classifications and wage rates conformed under paragraph B(2) of this term) and the Davis-Bacon poster (WH-1321) shall be posted at all times by the Subrecipient and Contractor at the site of the work in a prominent and accessible place where it can be easily seen by the workers.

(2)(a) The Contracting Officer shall require that any class of laborers or mechanics which is not listed in the wage determination and which is to be employed under the Subaward or Contract shall be classified in conformance with the wage determination. The Contracting Officer shall approve an additional classification and wage rate and fringe benefits therefore only when all the following criteria have been met:

(i) The work to be performed by the classification requested is not performed by a classification in the wage determination.

(ii) The classification is utilized in the area by the construction industry.

(iii) The proposed wage rate, including any bona fide fringe benefits, bears a reasonable relationship to the wage rates contained in the wage determination.

(b) If the Subrecipient (and Contractor, when applicable) and the laborers and mechanics to be

employed in the classification (if known), or their representatives agree on the classification and wage rate (including the amount designated for fringe benefits, where appropriate), the Subrecipient shall notify the Recipient. The Recipient shall notify the Contracting Officer of this agreement. If the Contracting Officer agrees with the classification and wage rate (including the amount designated for fringe benefits, where appropriate), a report of the action taken shall be sent by the Contracting Officer to the Administrator of the:

Wage and Hour Division
Employment Standards Administration
U.S. Department of Labor
Washington, DC 20210

The Administrator or an authorized representative will approve, modify, or disapprove every additional classification action within 30 days of receipt and so advise the Contracting Officer or will notify the Contracting Officer within the 30-day period that additional time is necessary.

(c) In the event the Subrecipient (and Contractor, when applicable), and the laborers or mechanics to be employed in the classification, or their representatives, do not agree on the proposed classification and wage rate (including the amount designated for fringe benefits, where appropriate), the Subrecipient shall notify the Recipient. The Recipient shall notify the Contracting Officer of the disagreement. The Contracting Officer shall refer the questions, including the views of all interested parties and the recommendation of the Contracting Officer, to the Administrator of the Wage and Hour Division for determination. The Administrator, or an authorized representative, will issue a determination within 30 days of receipt and so advise the Contracting Officer or will notify the Contracting Officer within the 30-day period that additional time is necessary.

(d) The wage rate (including fringe benefits, where appropriate) determined pursuant to subparagraphs B(2)(b) or B(2)(c) of this Term shall be paid to all workers performing work in the classification under the Award, Subaward, or Contract from the first day on which work is performed in the classification.

(3) Whenever the minimum wage rate prescribed in the Award, Subaward, or Contract for a class of laborers or mechanics includes a fringe benefit which is not expressed as an hourly rate, the Subrecipient and Contractor shall either pay the benefit as stated in the wage determination or shall pay another bona fide fringe benefit or an hourly cash equivalent thereof.

(4) If the Subrecipient or Contractor does not make payments to a trustee or other third person, the Subrecipient or Contractor may consider as part of the wages of any laborer or mechanic the amount of any costs reasonably anticipated in providing bona fide fringe benefits under a plan or program; provided, that the Secretary of Labor has found, upon the written request of the Subrecipient or Contractor that the applicable standards of the Davis-Bacon Act have been met. The Secretary of Labor may require the Subrecipient or Contractor to set aside in a separate account assets for the meeting of obligations under the plan or program.

C. Rates of Wages

(1) The minimum wages to be paid laborers and mechanics under the Subaward or Contract involved in performance of work at the project site, as determined by the Secretary of Labor to be prevailing for the corresponding classes of laborers and mechanics employed on projects of a character similar to the contract work in the pertinent locality, are included as an attachment to the Award, Subaward, or Contract.

(2) If the Subaward or Contract has been issued without a wage determination, the Recipient shall notify the Contracting Officer immediately of the site of the work under the Subaward or Contract in order for the appropriate wage determination to be obtained by the Contracting Officer from the Secretary of Labor.

D. Payrolls and Basic Records

(1) Payrolls and basic records relating thereto shall be maintained by the Recipient, Subrecipient and Contractor during the course of the work and preserved for a period of 3 years thereafter for all laborers and mechanics working at the site of the work. Such records shall contain the name, address, and social security number of each such worker, his or her correct classification, hourly rates of wages paid (including rates of contributions or costs anticipated for bona fide fringe benefits or cash equivalents thereof of the types described in section 1(b)(2)(B) of the Davis-Bacon Act), daily and weekly number of hours worked, deductions made, and actual wages paid. Whenever the Secretary of Labor has found, under paragraph (4) of the provision entitled Davis-Bacon Act, that the wages of any laborer or mechanic include the amount of any costs reasonably anticipated in providing benefits under a plan or program described in section 1(b)(2)(B) of the Davis-Bacon Act, the Subrecipient or Contractor shall maintain records which show that the commitment to provide such benefits is enforceable, that the plan or program is financially responsible, and that the plan or program has been communicated in writing to the laborers or mechanics affected, and records which show the costs anticipated or the actual cost incurred in providing such benefits. The Subrecipient or Contractor employing apprentices or trainees under approved programs shall maintain written evidence of the registration of apprenticeship programs and certification of trainee programs, the registration of the apprentices and trainees, and the ratios and wage rates prescribed in the applicable programs.

(2)(a) The Contractor shall submit weekly for each week in which any Contract work is performed a copy of all payrolls to the Subrecipient. The Subrecipient shall submit weekly for each week in which any Subaward or Contract work is performed a copy of all payrolls to the Recipient. The Recipient shall submit weekly for each week in which any Subaward or Contract work is performed a copy of all payrolls to the Contracting Officer. The payrolls submitted shall set out accurately and completely all of the information required to be maintained under paragraph D(1) of this Term, except that the full social security numbers and home addresses shall not be included on weekly transmittals. Instead, the payrolls shall only need to include an individually identifying number for each employee (e.g., the last four digits of the employee's social security number). The required weekly payroll information may be submitted in any form desired. Optional Form WH-347 is available for this purpose from the Wage and Hour Division Web site at http://www.dol.gov/esa/whd/forms/wh347instr.htm or its successor site.

(b) The Recipient is responsible for the ensuring that all Subrecipients and Contractors submit copies of payrolls and basic records as required by paragraph D, Payrolls and Basic Records, of this Term. The Subrecipient is responsible for ensuring all Contractors, including lower tier subcontractors submit copies of payrolls and basic records as required by paragraph D, Payrolls and Basic Records, of this term. Subrecipients and Contractors shall maintain the full social security number and current address of each covered worker, and shall provide them upon request for transmission to the Contracting Officer, the Recipient, or the Wage and Hour Division of the Department of Labor for purposes of an investigation or audit of compliance with prevailing wage requirements. The Recipient shall also obtain and provide the full social security number and current address of each covered worker upon request by the Contracting Officer or the Wage and Hour Division of the Department of Labor for purposes of an investigation or audit of compliance with prevailing wage requirements. It is not a violation of this section for a Recipient to require a Subrecipient or Contractor to provide addresses and social security numbers to the Recipient for its own records, without weekly submission to the Contracting Officer.

(c) Each payroll submitted shall be accompanied by a "Statement of Compliance," signed by the Recipient, Subrecipient or Contractor or his or her agent who pays or supervises the payment of the persons employed under the Subaward or Contract and shall certify—

(i) That the payroll for the payroll period contains the information required to be maintained under paragraph D(2)(a) of this Term, the appropriate information is being maintained under paragraph D(1) of this Term, and that such information is correct and complete;

(ii) That each laborer or mechanic (including each helper, apprentice, and trainee) employed on the Subaward or Contract during the payroll period has been paid the full weekly wages earned, without rebate, either directly or indirectly, and that no deductions have been made either directly or indirectly from the full wages earned, other than permissible deductions as set forth in the Regulations, 29 CFR Part 3; and

(iii) That each laborer or mechanic has been paid not less than the applicable wage rates and fringe benefits or cash equivalents for the classification of work performed, as specified in the applicable wage determination incorporated into the Subaward or Contract.

(d) The weekly submission of a properly executed certification set forth on the reverse side of Optional Form WH-347 shall satisfy the requirement for submission of the "Statement of Compliance" required by paragraph D(2)(c) of this Term.

(e) The falsification of any of the certifications in Paragraph D, Payrolls and Basic Records, of this Term may subject the Recipient, Subrecipient or Contractor to civil or criminal prosecution under Section 1001 of Title 18 and Section 3729 of Title 31 of the United States Code.

(3) The Recipient, Subrecipient, or Contractor shall make the records required under paragraph D(1) of this Term available for inspection, copying, or transcription by the Contracting Officer, authorized representatives of the Contracting Officer, or the Department of Labor. The Subrecipient or Contractor shall permit the Contracting Officer, authorized representatives of the Contracting Officer or the Department of Labor to interview employees during working hours on the job. If the Recipient, Subrecipient, or Contractor fails to submit the required records or to make them available, the Contracting Officer may, after written notice to the Recipient, Subrecipient, or Contractor take such action as may be necessary to cause the suspension of any further payment, advance, or guarantee of funds. Furthermore, failure to submit the required records upon request or to make such records available may be grounds for debarment action pursuant to 29 CFR 5.12.

E. Withholding of Funds

(1) The DOE Contracting Officer shall, upon his or her or its own action or upon written request of an authorized representative of the Department of Labor, withhold or cause to be withheld from the Recipient or any other contract or Federal Award with the same Recipient, on this or any other federally assisted Award subject to Davis-Bacon prevailing wage requirements, which is held by the same Recipient so much of the accrued payments or advances as may be considered necessary to pay laborers and mechanics, including apprentices, trainees, and helpers, employed by the Subrecipient or a Contractor the full amount of wages required by the Award or Subaward or a Contract. In the event of failure to pay any laborer or mechanic, including any apprentice, trainee, or helper, employed or working on the site of the work, all or part of the wages required by the Award or Subaward or a Contract, the Contracting Officer may, after written notice to the Recipient take such action as may be necessary to cause the suspension of any further payment, advance, or guarantee of funds until such violations have ceased.

(2) The Recipient shall, upon its own action or upon written request of the DOE Contracting Officer or an authorized representative of the Department of Labor, withhold or cause to be withheld from any Subrecipient or Contractor so much of the accrued payments or advances as may be considered necessary to pay laborers and mechanics, including apprentices, trainees, and helpers, employed by the Subrecipient or Contractor the full amount of wages required by the Subaward or Contract. In the event of failure to pay any laborer or mechanic, including any apprentice, trainee, or helper, employed or working on the site of the work, all or part of the wages required by the Subaward or Contract, the Recipient may, after written notice to the Subrecipient or Contractor, take such action as may be necessary to cause the suspension of any further payment, advance, or guarantee of funds until such violations have ceased or the Government may cause the suspension of any further payment under any other contract or Federal award with the same Subrecipient or Contractor, on any other federally assisted Award subject to Davis-Bacon prevailing wage requirements, which is held by the same

Subrecipient or Contractor.

F. Apprentices and Trainees

(1) Apprentices.

(a) An apprentice will be permitted to work at less than the predetermined rate for the work they performed when they are employed—

(i) Pursuant to and individually registered in a bona fide apprenticeship program registered with the U.S. Department of Labor, Employment and Training Administration, Office of Apprenticeship and Training, Employer, and Labor Services (OATELS) or with a State Apprenticeship Agency recognized by the OATELS; or

(ii) In the first 90 days of probationary employment as an apprentice in such an apprenticeship program, even though not individually registered in the program, if certified by the OATELS or a State Apprenticeship Agency (where appropriate) to be eligible for probationary employment as an apprentice.

(b) The allowable ratio of apprentices to journeymen on the job site in any craft classification shall not be greater than the ratio permitted to the Subrecipient or Contractor as to the entire work force under the registered program.

(c) Any worker listed on a payroll at an apprentice wage rate, who is not registered or otherwise employed as stated in paragraph F(1) of this Term, shall be paid not less than the applicable wage determination for the classification of work actually performed. In addition, any apprentice performing work on the job site in excess of the ratio permitted under the registered program shall be paid not less than the applicable wage rate on the wage determination for the work actually performed.

(d) Where a Subrecipient or Contractor is performing construction on a project in a locality other than that in which its program is registered, the ratios and wage rates (expressed in percentages of the journeyman's hourly rate) specified in the Subrecipient's or Contractor's registered program shall be observed. Every apprentice must be paid at not less than the rate specified in the registered program for the apprentice's level of progress, expressed as a percentage of the journeyman hourly rate specified in the applicable wage determination.

(e) Apprentices shall be paid fringe benefits in accordance with the provisions of the apprenticeship program. If the apprenticeship program does not specify fringe benefits, apprentices must be paid the full amount of fringe benefits listed on the wage determination for the applicable classification. If the Administrator determines that a different practice prevails for the applicable apprentice classification, fringes shall be paid in accordance with that determination.

(f) In the event OATELS, or a State Apprenticeship Agency recognized by OATELS, withdraws approval of an apprenticeship program, the Subrecipient or Contractor will no longer be permitted to utilize apprentices at less than the applicable predetermined rate for the work performed until an acceptable program is approved.

(2) Trainees.

(a) Except as provided in 29 CFR 5.16, trainees will not be permitted to work at less than the predetermined rate for the work performed unless they are employed pursuant to and individually registered in a program which has received prior approval, evidenced by formal certification by (OATELS). The ratio of trainees to journeymen on the job site shall not be greater than permitted under the plan approved by OATELS.

(b) Every trainee must be paid at not less than the rate specified in the approved program for the trainee's level of progress, expressed as a percentage of the journeyman hourly rate specified in

the applicable wage determination. Trainees shall be paid fringe benefits in accordance with the provisions of the trainee program. If the trainee program does not mention fringe benefits, trainees shall be paid the full amount of fringe benefits listed in the wage determination unless the Administrator of the Wage and Hour Division determines that there is an apprenticeship/training program associated with the corresponding journeyman wage rate in the wage determination which provides for less than full fringe benefits for apprentices. Any employee listed on the payroll at a trainee rate who is not registered and participating in a training plan approved by the OATELS shall be paid not less than the applicable wage rate in the wage determination for the classification of work actually performed In addition, any trainee performing work on the job site in excess of the ratio permitted under the registered program shall be paid not less than the applicable wage rate in the wage determination for the work actually performed.

(c) In the event OATELS withdraws approval of a training program, the Subrecipient or Contractor will no longer be permitted to utilize trainees at less than the applicable predetermined rate for the work performed until an acceptable program is approved.

(3) Equal employment opportunity. The utilization of apprentices, trainees, and journeymen under this Term shall be in conformity with the equal employment opportunity requirements of Executive Order 11246, as amended, and 29 CFR Part 30.

G. Compliance with Copeland Act Requirements

The Recipient, Subrecipient or Contractor shall comply with the requirements of 29 CFR Part 3 which are hereby incorporated by reference in the Award, Subaward or Contract.

H. Subawards and Contracts

(1) The Recipient, the Subrecipient and Contractor shall insert in the Subaward or any Contracts this Term entitled "Davis Bacon Act Requirements" and such other terms as the Contracting Officer may require. The Recipient shall be responsible for ensuring compliance by any Subrecipient or Contractor with all of the requirements contained in this Term. The Subrecipient shall be responsible for the compliance by Contractor with all of the requirements contained in this Term.

(2) Within 14 days after issuance of a Subaward, the Recipient shall deliver to the Contracting Officer a completed Standard Form (SF) 1413, Statement and Acknowledgment, for each Subaward and Contract for construction within the United States, including the Subrecipient's and Contractor's signed and dated acknowledgment that this Term) has been included in the Subaward and any Contracts. The SF 1413 is available from the Contracting Officer or at http://contacts.gsa.gov/webforms.nsf/0/70B4872D16EE95A785256A26004F7EA8/$file/sf1413_e.pdf. Within 14 days after issuance of a Contract or lower- tier subcontract, the Subrecipient shall deliver to the Recipient a completed Standard Form (SF) 1413, Statement and Acknowledgment, for each Contract and lower-tier subcontract for construction within the United States, including the Contractor and lower- tier subcontractor's signed and dated acknowledgment that this Term has been included in any Contract and lower-tier subcontracts. SF 1413 is available from the Contracting Officer or at http://contacts.gsa.gov/webforms.nsf/0/70B4872D16EE95A785256A26004F7EA8/$file/sf1413_e.pdf. The Recipient shall immediately provide to the DOE Contracting Officer the completed Standard Forms (SF) 1413.

I. Contract Termination—Debarment

A breach of these provisions may be grounds for termination of the Award, Subaward, or Contract and for debarment as a Contractor or subcontractor as provided in 29 CFR 5.12.

J. Compliance with Davis-Bacon and Related Act Regulations

All rulings and interpretations of the Davis-Bacon and Related Acts contained in 29 CFR Parts 1, 3, and 5 are hereby incorporated by reference in the Award, Subaward or Contract.

K. Disputes Concerning Labor Standards

The United States Department of Labor has set forth in 29 CFR Parts 5, 6, and 7 procedures for resolving disputes concerning labor standards requirements. Such disputes shall be resolved in accordance with those procedures and shall not be subject to any other dispute provision that may be contained in the Award, Subaward, and Contract. Disputes within the meaning of this Term include disputes between the Recipient, Subrecipient (including any Contractor) and the Department of Energy, the U.S. Department of Labor, or the employees or their representatives.

L. Certification of Eligibility.

(1) By entering into this Award, Subaward, or Contract (as applicable), the Recipient, Subrecipient, or Contractor, respectively certifies that neither it (nor he or she) nor any person or firm who has an interest in the Recipient, Subrecipient, or Contractor's firm, is a person, entity, or firm ineligible to be awarded Government contracts or Government awards by virtue of section 3(a) of the Davis-Bacon Act or 29 CFR 5.12(a)(1).

(2) No part of this Award, Subaward or Contract shall be subcontracted to any person or firm ineligible for award of a Government contract or Government award by virtue of section 3(a) of the Davis-Bacon Act or 29 CFR 5.12(a)(1).

(3) The penalty for making false statements is prescribed in the U.S. Criminal Code, 18 U.S.C. 1001.

M. Approval of Wage Rates

All straight time wage rates, and overtime rates based thereon, for laborers and mechanics engaged in work under an Award, Subaward or Contract must be submitted for approval in writing by the head of the federal contracting activity or a representative expressly designated for this purpose, if the straight time wages exceed the rates for corresponding classifications contained in the applicable Davis-Bacon Act minimum wage determination included in the Award, Subaward or Contract. Any amount paid by the Subrecipient or Contractor to any laborer or mechanic in excess of the agency approved wage rate shall be at the expense of the Subrecipient or Contractor and shall not be reimbursed by the Recipient or Subrecipient. If the Government refuses to authorize the use of the overtime, the Subrecipient or Contractor is not released from the obligation to pay employees at the required overtime rates for any overtime actually worked.

Contract Work Hours and Safety Standards Act

This Term entitled "Contract Work Hours and Safety Standards Act (CWHSSA)" shall apply to any Subaward or Contract in an amount in excess of $100,000. As used in this CWHSSA Term, the terms laborers and mechanics include watchmen and guards.

A. Overtime requirements. No Subrecipient or Contractor contracting for any part of the Subaward work which may require or involve the employment of laborers or mechanics shall require or permit any such laborer or mechanic in any workweek in which he or she is employed on such work to work in excess of forty hours in such workweek unless such laborer or mechanic receives compensation at a rate not less than one and one-half times the basic rate of pay for all hours worked in excess of forty hours in such workweek.

B. Violation; liability for unpaid wages; liquidated damages. In the event of any violation of the term set forth in paragraph B herein, the Subrecipient or Contractor responsible therefor shall be liable for the unpaid wages. In addition, such Subrecipient or Contractor shall be liable to the United States (in the case of work done under a Subaward or Contract for the District of Columbia or a territory, to such District or to such territory), for liquidated damages. Such liquidated damages shall be computed with respect to each individual laborer or mechanic, including watchmen and guards, employed in violation of the provision set forth in CWSSHA paragraph A, in the sum of $10 for each calendar day on which such individual was required or permitted to work in excess of the standard workweek of forty hours without payment of the overtime wages required by the term set forth in paragraph (A) of this section.

C. Withholding for unpaid wages and liquidated damages.

(1) The DOE Contracting Officer shall upon its own action or upon written request of an authorized representative of the Department of Labor withhold or cause to be withheld, from any moneys payable on account of work performed by the Recipient on this or any other Federal Award or Federal contract with the same Recipient on any other federally-assisted Award or contract subject to the CWHSSA, which is held by the same Recipient such sums as may be determined to be necessary to satisfy any liabilities of such Recipient for unpaid wages and liquidated damages as provided in the term set forth in CWHSSA, paragraph B of this Term.

(2) The Recipient shall, upon its own action or upon written request of the DOE Contracting Officer or an authorized representative of the Department of Labor, withhold or cause from any moneys payable on account of work performed by the Subrecipient or Contractor on this or any other federally assisted subaward or contract subject to the CWHSSA, which is held by the same Subrecipient or Contractor such sums as may be determined to be necessary to satisfy any liabilities of such Subrecipient or Contractor for unpaid wages and liquidated damages as provided in term set forth in CWHSSA, paragraph B of this Term.

D. Subcontracts. The Subrecipient shall insert in a Contract and a Contractor shall insert in any lower tier subcontracts, the terms set forth in these CWHSSA paragraphs (A) through (D) and also a provision requiring the Contractors to include this CWHSSA Term in any lower tier subcontracts. The Recipient shall be responsible for compliance by any Subrecipient or Contractor, with the CWHSSA paragraphs A through D. The Subrecipient shall be responsible for compliance by any Contractor (including lower-tier subcontractors).

E. The Subrecipient or Contractor shall maintain payrolls and basic payrolls in accordance with Davis-Bacon Act Requirements term, for all laborers and mechanics, including guards and watchmen working on the Subaward or Contracts. These records are subject to the requirements set forth in the Davis Bacon Requirements term.

Prescription: Include for ARRA Awards (other than Weatherization Assistance Program and Loan Program awards) when WAGE RATE REQUIREMENTS UNDER SECTION 1606 OF THE AMERICAN RECOVERY AND REINVESTMENT ACT ("RECOVERY ACT") term is required.

DAVIS BACON ACT AND CONTRACT WORK HOURS AND SAFETY STANDARDS ACT

Definitions: For purposes of this article, Davis Bacon Act and Contract Work Hours and Safety Standards Act, the following definitions are applicable:

(1) "Award" means any grant, cooperative agreement or technology investment agreement made with Recovery Act funds by the Department of Energy (DOE) to a Recipient. Such Award must require compliance with the labor standards clauses and wage rate requirements of the Davis-Bacon Act (DBA) for work performed by all laborers and mechanics employed by Recipients (other than a unit of State or local government whose own employees perform the construction) Subrecipients, Contractors and subcontractors.

(2) "Contractor" means an entity that enters into a Contract. For purposes of these clauses, Contractor shall include (as applicable) prime contractors, Recipients, Subrecipients, and Recipients' or Subrecipients' contractors, subcontractors, and lower-tier subcontractors. "Contractor" does not mean a unit of State or local government where construction is performed

by its own employees."

(3) "Contract" means a contract executed by a Recipient, Subrecipient, prime contractor or any tier subcontractor for construction, alteration, or repair. It may also mean (as applicable) (i) financial assistance instruments such as grants, cooperative agreements, technology investment agreements, and loans; and, (ii) Sub awards, contracts and subcontracts issued under financial assistance agreements. "Contract" does not mean a financial assistance instrument with a unit of State or local government where construction is performed by its own employees.

(4) "Contracting Officer" means the DOE official authorized to execute an Award on behalf of DOE and who is responsible for the business management and non-program aspects of the financial assistance process.

(5) "Recipient" means any entity other than an individual that receives an Award of Federal funds in the form of a grant, cooperative agreement or technology investment agreement directly from the Federal Government and is financially accountable for the use of any DOE funds or property, and is legally responsible for carrying out the terms and conditions of the program and Award.

(6) "Subaward" means an award of financial assistance in the form of money, or property in lieu of money, made under an award by a Recipient to an eligible Subrecipient or by a Subrecipient to a lower- tier subrecipient. The term includes financial assistance when provided by any legal agreement, even if the agreement is called a contract, but does not include the Recipient's procurement of goods and services to carry out the program nor does it include any form of assistance which is excluded from the definition of "Award" above.

(7) "Subrecipient" means a non-Federal entity that expends Federal funds received from a Recipient to carry out a Federal program, but does not include an individual that is a beneficiary of such a program.

(a) Davis Bacon Act

(1) Minimum wages.

(i) All laborers and mechanics employed or working upon the site of the work (or under the United States Housing Act of 1937 or under the Housing Act of 1949 in the construction or development of the project), will be paid unconditionally and not less often than once a week, and without subsequent deduction or rebate on any account (except such payroll deductions as are permitted by regulations issued by the Secretary of Labor under the Copeland Act (29 CFR part 3)), the full amount of wages and bona fide fringe benefits (or cash equivalents thereof) due at time of payment computed at rates not less than those contained in the wage determination of the Secretary of Labor which is attached hereto and made a part hereof, regardless of any contractual relationship which may be alleged to exist between the Contractor and such laborers and mechanics.

Contributions made or costs reasonably anticipated for bona fide fringe benefits under section 1(b)(2) of the Davis-Bacon Act on behalf of laborers or mechanics are considered wages paid to such laborers or mechanics, subject to the provisions of paragraph (a)(1)(iv) of this section; also, regular contributions made or costs incurred for more than a weekly period (but not less often than quarterly) under plans, funds, or programs which cover the particular weekly period, are deemed to be constructively made or incurred during such weekly period. Such laborers and mechanics shall be paid the appropriate wage rate and fringe benefits on the wage determination for the classification of work actually performed, without regard to skill, except as provided in § 5.5(a)(4). Laborers or mechanics performing work in more than one classification may be compensated at the rate specified for each classification for the time actually worked therein: *Provided*, That

the employer's payroll records accurately set forth the time spent in each classification in which work is performed. The wage determination (including any additional classification and wage rates conformed under paragraph (a)(1)(ii) of this section) and the Davis-Bacon poster (WH-1321) shall be posted at all times by the Contractor and its subcontractors at the site of the work in a prominent and accessible place where it can be easily seen by the workers.

(ii)(A) The Contracting Officer shall require that any class of laborers or mechanics, including helpers, which is not listed in the wage determination and which is to be employed under the Contract shall be classified in conformance with the wage determination. The Contracting Officer shall approve an additional classification and wage rate and fringe benefits therefore only when the following criteria have been met:

(1) The work to be performed by the classification requested is not performed by a classification in the wage determination; and

(2) The classification is utilized in the area by the construction industry; and

(3) The proposed wage rate, including any bona fide fringe benefits, bears a reasonable relationship to the wage rates contained in the wage determination.

(B) If the Contractor and the laborers and mechanics to be employed in the classification (if known), or their representatives, and the Contracting Officer agree on the classification and wage rate (including the amount designated for fringe benefits where appropriate), a report of the action taken shall be sent by the Contracting Officer to the Administrator of the Wage and Hour Division, U.S. Department of Labor, Washington, DC 20210. The Administrator, or an authorized representative, will approve, modify, or disapprove every additional classification action within 30 days of receipt and so advise the Contracting Officer or will notify the Contracting Officer within the 30-day period that additional time is necessary.

(C) In the event the Contractor, the laborers or mechanics to be employed in the classification or their representatives, and the Contracting Officer do not agree on the proposed classification and wage rate (including the amount designated for fringe benefits, where appropriate), the Contracting Officer shall refer the questions, including the views of all interested parties and the recommendation of the Contracting Officer, to the Administrator for determination. The Administrator, or an authorized representative, will issue a determination within 30 days of receipt and so advise the Contracting Officer or will notify the Contracting Officer within the 30-day period that additional time is necessary.

(D) The wage rate (including fringe benefits where appropriate) determined pursuant to paragraphs (a)(1)(ii)(B) or (C) of this section, shall be paid to all workers performing work in the classification under this Contract from the first day on which work is performed in the classification.

(iii) Whenever the minimum wage rate prescribed in the Contract for a class of laborers or mechanics includes a fringe benefit which is not expressed as an hourly rate, the Contractor shall either pay the benefit as stated in the wage determination or shall pay another bona fide fringe benefit or an hourly cash equivalent thereof.

(iv) If the Contractor does not make payments to a trustee or other third person, the Contractor may consider as part of the wages of any laborer or mechanic the amount of any costs reasonably anticipated in providing bona fide fringe benefits under a plan or program, *Provided*, That the Secretary of Labor has found, upon the written request of the Contractor, that the applicable standards of the Davis-Bacon Act have been met. The

Secretary of Labor may require the Contractor to set aside in a separate account assets for the meeting of obligations under the plan or program.

(2) Withholding. The Department of Energy or the Recipient or Subrecipient shall upon its own action or upon written request of an authorized representative of the Department of Labor withhold or cause to be withheld from the Contractor under this Contract or any other Federal contract with the same prime contractor, or any other federally-assisted contract subject to Davis-Bacon prevailing wage requirements, which is held by the same prime contractor, so much of the accrued payments or advances as may be considered necessary to pay laborers and mechanics, including apprentices, trainees, and helpers, employed by the Contractor or any subcontractor the full amount of wages required by the Contract. In the event of failure to pay any laborer or mechanic, including any apprentice, trainee, or helper, employed or working on the site of the work (or under the United States Housing Act of 1937 or under the Housing Act of 1949 in the construction or development of the project), all or part of the wages required by the Contract, the Department of Energy, Recipient, or Subrecipient, may, after written notice to the Contractor, sponsor, applicant, or owner, take such action as may be necessary to cause the suspension of any further payment, advance, or guarantee of funds until such violations have ceased.

(3) Payrolls and basic records.

(i) Payrolls and basic records relating thereto shall be maintained by the Contractor during the course of the work and preserved for a period of three years thereafter for all laborers and mechanics working at the site of the work (or under the United States Housing Act of 1937, or under the Housing Act of 1949, in the construction or development of the project). Such records shall contain the name, address, and social security number of each such worker, his or her correct classification, hourly rates of wages paid (including rates of contributions or costs anticipated for bona fide fringe benefits or cash equivalents thereof of the types described in section 1(b)(2)(B) of the Davis-Bacon Act), daily and weekly number of hours worked, deductions made and actual wages paid. Whenever the Secretary of Labor has found under 29 CFR 5.5(a)(1)(iv) that the wages of any laborer or mechanic include the amount of any costs reasonably anticipated in providing benefits under a plan or program described in section 1(b)(2)(B) of the Davis-Bacon Act, the Contractor shall maintain records which show that the commitment to provide such benefits is enforceable, that the plan or program is financially responsible, and that the plan or program has been communicated in writing to the laborers or mechanics affected, and records which show the costs anticipated or the actual cost incurred in providing such benefits. Contractors employing apprentices or trainees under approved programs shall maintain written evidence of the registration of apprenticeship programs and certification of trainee programs, the registration of the apprentices and trainees, and the ratios and wage rates prescribed in the applicable programs.

(ii) (A) The Contractor shall submit weekly for each week in which any Contract work is performed a copy of all payrolls to the Department of Energy if the agency is a party to the Contract, but if the agency is not such a party, the Contractor will submit the payrolls to the Recipient or Subrecipient (as applicable), applicant, sponsor, or owner, as the case may be, for transmission to the Department of Energy. The payrolls submitted shall set out accurately and completely all of the information required to be maintained under 29 CFR 5.5(a)(3)(i), except that full social security numbers and home addresses shall not be included on weekly transmittals. Instead the payrolls shall only need to include an individually identifying number for each employee (e.g., the last four digits of the employee's social security number). The required weekly payroll information may be submitted in any form desired. Optional Form WH-347 is available for this purpose from the Wage and Hour Division Web site at http://www.dol.gov/esa/whd/forms/wh347instr.htm or its successor site. The prime Contractor is responsible for the submission of copies of payrolls by all

subcontractors. Contractors and subcontractors shall maintain the full social security number and current address of each covered worker, and shall provide them upon request to the Department of Energy if the agency is a party to the Contract, but if the agency is not such a party, the Contractor will submit them to the Recipient or Subrecipient (as applicable), applicant, sponsor, or owner, as the case may be, for transmission to the Department of Energy, the Contractor, or the Wage and Hour Division of the Department of Labor for purposes of an investigation or audit of compliance with prevailing wage requirements. It is not a violation of this section for a prime contractor to require a subcontractor to provide addresses and social security numbers to the prime contractor for its own records, without weekly submission to the sponsoring government agency (or the Recipient or Subrecipient (as applicable), applicant, sponsor, or owner).

(B) Each payroll submitted shall be accompanied by a "Statement of Compliance," signed by the Contractor or subcontractor or his or her agent who pays or supervises the payment of the persons employed under the Contract and shall certify the following:

(1) That the payroll for the payroll period contains the information required to be provided under § 5.5 (a)(3)(ii) of Regulations, 29 CFR part 5, the appropriate information is being maintained under § 5.5 (a)(3)(i) of Regulations, 29 CFR part 5, and that such information is correct and complete;

(2) That each laborer or mechanic (including each helper, apprentice, and trainee) employed on the Contract during the payroll period has been paid the full weekly wages earned, without rebate, either directly or indirectly, and that no deductions have been made either directly or indirectly from the full wages earned, other than permissible deductions as set forth in Regulations, 29 CFR part 3;

(3) That each laborer or mechanic has been paid not less than the applicable wage rates and fringe benefits or cash equivalents for the classification of work performed, as specified in the applicable wage determination incorporated into the Contract.

(C) The weekly submission of a properly executed certification set forth on the reverse side of Optional Form WH-347 shall satisfy the requirement for submission of the "Statement of Compliance" required by paragraph (a)(3)(ii)(B) of this section.

(D) The falsification of any of the above certifications may subject the Contractor or subcontractor to civil or criminal prosecution under section 1001 of title 18 and section 3729 of title 31 of the United States Code.

(iii) The Contractor or subcontractor shall make the records required under paragraph (a)(3)(i) of this section available for inspection, copying, or transcription by authorized representatives of the Department of Energy or the Department of Labor, and shall permit such representatives to interview employees during working hours on the job. If the Contractor or subcontractor fails to submit the required records or to make them available, the Federal agency may, after written notice to the Contractor, sponsor, applicant, or owner, take such action as may be necessary to cause the suspension of any further payment, advance, or guarantee of funds. Furthermore, failure to submit the required records upon request or to make such records available may be grounds for debarment action pursuant to 29 CFR 5.12.

(4) Apprentices and trainees--

(i) Apprentices. Apprentices will be permitted to work at less than the predetermined rate for the work they performed when they are employed pursuant to and individually registered in a bona fide apprenticeship program registered with the U.S. Department of Labor, Employment and Training Administration, Office of Apprenticeship Training, Employer and Labor Services, or with a State Apprenticeship Agency recognized by the Office, or if a person is employed in his or her first 90 days of probationary employment as an apprentice in such an apprenticeship program, who is not individually registered in the program, but who has been certified by the Office of Apprenticeship Training, Employer and Labor Services or a State Apprenticeship Agency (where appropriate) to be eligible for probationary employment as an apprentice. The allowable ratio of apprentices to journeymen on the job site in any craft classification shall not be greater than the ratio permitted to the Contractor as to the entire work force under the registered program. Any worker listed on a payroll at an apprentice wage rate, who is not registered or otherwise employed as stated above, shall be paid not less than the applicable wage rate on the wage determination for the classification of work actually performed. In addition, any apprentice performing work on the job site in excess of the ratio permitted under the registered program shall be paid not less than the applicable wage rate on the wage determination for the work actually performed. Where a Contractor is performing construction on a project in a locality other than that in which its program is registered, the ratios and wage rates (expressed in percentages of the journeyman's hourly rate) specified in the Contractor's or subcontractor's registered program shall be observed. Every apprentice must be paid at not less than the rate specified in the registered program for the apprentice's level of progress, expressed as a percentage of the journeymen hourly rate specified in the applicable wage determination. Apprentices shall be paid fringe benefits in accordance with the provisions of the apprenticeship program. If the apprenticeship program does not specify fringe benefits, apprentices must be paid the full amount of fringe benefits listed on the wage determination for the applicable classification. If the Administrator determines that a different practice prevails for the applicable apprentice classification, fringes shall be paid in accordance with that determination. In the event the Office of Apprenticeship Training, Employer and Labor Services, or a State Apprenticeship Agency recognized by the Office, withdraws approval of an apprenticeship program, the Contractor will no longer be permitted to utilize apprentices at less than the applicable predetermined rate for the work performed until an acceptable program is approved.

(ii) Trainees. Except as provided in 29 CFR 5.16, trainees will not be permitted to work at less than the predetermined rate for the work performed unless they are employed pursuant to and individually registered in a program which has received prior approval, evidenced by formal certification by the U.S. Department of Labor, Employment and Training Administration. The ratio of trainees to journeymen on the job site shall not be greater than permitted under the plan approved by the Employment and Training Administration. Every trainee must be paid at not less than the rate specified in the approved program for the trainee's level of progress, expressed as a percentage of the journeyman hourly rate specified in the applicable wage determination. Trainees shall be paid fringe benefits in accordance with the provisions of the trainee program. If the trainee program does not mention fringe benefits, trainees shall be paid the full amount of fringe benefits listed on the wage determination unless the Administrator of the Wage and Hour Division determines that there is an apprenticeship program associated with the corresponding journeyman wage rate on the wage determination which provides for less than full fringe benefits for apprentices. Any employee listed on the payroll at a trainee rate who is not registered and participating in a training plan approved by the Employment and Training Administration shall be paid not less than the applicable wage rate on the wage determination for the classification of work actually performed. In addition, any trainee performing work on the job site in excess of the ratio permitted under the registered program shall be paid not less than the applicable wage rate on the wage determination for the work actually performed. In the event the Employment and

Training Administration withdraws approval of a training program, the Contractor will no longer be permitted to utilize trainees at less than the applicable predetermined rate for the work performed until an acceptable program is approved.

(iii) Equal employment opportunity. The utilization of apprentices, trainees and journeymen under this part shall be in conformity with the equal employment opportunity requirements of Executive Order 11246, as amended and 29 CFR part 30.

(5) Compliance with Copeland Act requirements. The Contractor shall comply with the requirements of 29 CFR part 3, which are incorporated by reference in this Contract.

(6) Contracts and Subcontracts. The Recipient, Subrecipient, the Recipient's and Subrecipient's contractors and subcontractor shall insert in any Contracts the clauses contained herein in(a)(1) through (10) and such other clauses as the Department of Energy may by appropriate instructions require, and also a clause requiring the subcontractors to include these clauses in any lower tier subcontracts. The Recipient shall be responsible for the compliance by any subcontractor or lower tier subcontractor with all of the paragraphs in this clause.

(7) Contract termination: debarment. A breach of the Contract clauses in 29 CFR 5.5 may be grounds for termination of the Contract, and for debarment as a contractor and a subcontractor as provided in 29 CFR 5.12.

(8) Compliance with Davis-Bacon and Related Act requirements. All rulings and interpretations of the Davis-Bacon and Related Acts contained in 29 CFR parts 1, 3, and 5 are herein incorporated by reference in this Contract.

(9) Disputes concerning labor standards. Disputes arising out of the labor standards provisions of this Contract shall not be subject to the general disputes clause of this Contract. Such disputes shall be resolved in accordance with the procedures of the Department of Labor set forth in 29 CFR parts 5, 6, and 7. Disputes within the meaning of this clause include disputes between the Recipient, Subrecipient, the Contractor (or any of its subcontractors) and the contracting agency, the U.S. Department of Labor, or the employees or their representatives.

(10) Certification of eligibility.

(i) By entering into this Contract, the Contractor certifies that neither it (nor he or she) nor any person or firm who has an interest in the Contractor's firm is a person or firm ineligible to be awarded Government contracts by virtue of section 3(a) of the Davis-Bacon Act or 29 CFR 5.12(a)(1).

(ii) No part of this Contract shall be subcontracted to any person or firm ineligible for award of a Government contract by virtue of section 3(a) of the Davis-Bacon Act or 29 CFR 5.12(a)(1).

(iii) The penalty for making false statements is prescribed in the U.S. Criminal Code, 18 U.S.C. 1001.

(b) Contract Work Hours and Safety Standards Act. As used in this paragraph, the terms laborers and mechanics include watchmen and guards.

(1) Overtime requirements. No Contractor or subcontractor contracting for any part of the Contract work which may require or involve the employment of laborers or mechanics shall require or permit any such laborer or mechanic in any workweek in which he or she is employed on such work to work in excess of forty hours in such workweek unless such laborer or mechanic receives compensation at a rate not less than one and one-half times the basic rate of pay for all hours

worked in excess of forty hours in such workweek.

(2) Violation; liability for unpaid wages; liquidated damages. In the event of any violation of the clause set forth in paragraph (b)(1) of this section the Contractor and any subcontractor responsible therefor shall be liable for the unpaid wages. In addition, such Contractor and subcontractor shall be liable to the United States (in the case of work done under contract for the District of Columbia or a territory, to such District or to such territory), for liquidated damages. Such liquidated damages shall be computed with respect to each individual laborer or mechanic, including watchmen and guards, employed in violation of the clause set forth in paragraph (b)(1) of this section, in the sum of $10 for each calendar day on which such individual was required or permitted to work in excess of the standard workweek of forty hours without payment of the overtime wages required by the clause set forth in paragraph (b)(1) of this section.

(3) Withholding for unpaid wages and liquidated damages. The Department of Energy or the Recipient or Subrecipient shall upon its own action or upon written request of an authorized representative of the Department of Labor withhold or cause to be withheld, from any moneys payable on account of work performed by the Contractor or subcontractor under any such contract or any other Federal contract with the same prime Contractor, or any other federally-assisted contract subject to the Contract Work Hours and Safety Standards Act, which is held by the same prime contractor, such sums as may be determined to be necessary to satisfy any liabilities of such Contractor or subcontractor for unpaid wages and liquidated damages as provided in the clause set forth in paragraph (b)(2) of this section.

(4) Contracts and Subcontracts. The Recipient, Subrecipient, and Recipient's and Subrecipient's contractor or subcontractor shall insert in any Contracts, the clauses set forth in paragraph (b)(1) through (4) of this section and also a clause requiring the subcontractors to include these clauses in any lower tier subcontracts. The Recipient shall be responsible for compliance by any subcontractor or lower tier subcontractor with the clauses set forth in paragraphs (b)(1) through (4) of this section.

(5) The Contractor or subcontractor shall maintain payrolls and basic payroll records during the course of the work and shall preserve them for a period of three years from the completion of the Contract for all laborers and mechanics, including guards and watchmen, working on the Contract. Such records shall contain the name and address of each such employee, social security number, correct classifications, hourly rates of wages paid, daily and weekly number of hours worked, deductions made, and actual wages paid. The records to be maintained under this paragraph shall be made available by the Contractor or subcontractor for inspection, copying, or transcription by authorized representatives of the Department of Energy and the Department of Labor, and the Contractor or subcontractor will permit such representatives to interview employees during working hours on the job.

From 10 CFR 600.236-Procurement

(a) States. When procuring property and services under a grant, a State will follow the same policies and procedures it uses for procurements from its non-Federal funds. The State will ensure that every purchase order or other contract includes any clauses required by Federal statutes and executive orders and their implementing regulations. Other grantees and sub-grantees will follow paragraphs (b) through (i) in this section.

Note: 600.236 (i)-Contract provisions. A grantee's and sub-grantee's contracts MUST contain provisions in paragraph (i) of this section (1) through (13).

10 CFR 600.236 -- http://ecfr.gpoaccess.gov/cgi/t/text/text-idx?c=ecfr&sid=1d87da29f6087f0251f78954c8888ff1&rgn=div8&view=text&node=10:4.0.1.3.9.3.20.23&idno=10

From 10 CFR 600.237-Subgrants

Retention and Access Requirements for Records

http://ecfr.gpoaccess.gov/cgi/t/text/text-idx?type=simple;c=ecfr;cc=ecfr;sid=4c22613d54c8ee557f9dc9d6015ec1c9;idno=10;region=DIV1;q1=600.242;rgn=div8;view=text;node=10%3A4.0.1.3.9.3.20.27

Conform any advances of grant funds to sub-grantees substantially to the same standards of timing and amount that apply to cash advances by Federal agencies (refer state to 10 CFR 600.221(c).

10 CFR 60.221(c) *Advances.* Grantees and subgrantees shall be paid in advance, provided they maintain or demonstrate the willingness and ability to maintain procedures to minimize the time elapsing between the transfer of the funds and their disbursement by the grantee or subgrantee.

This certifies I have received and reviewed these Special Provisions relating to the American Recovery and Reinvestment Act of 2009.

Signature

8/22/11
Date

Subawardee (Agency)

West Virginia Department of Agriculture
Administrative Services Division, Building and Grounds
ARRA Project 5: HVAC replacements at Gus R. Douglass Agricultural Center at Guthrie
WVDA - Bid Form

Name of Bidder Mountain Air Sheet Metal

Replace existing HVAC systems with new energy efficient equipment

	QTY.	Address	BID COST
	1	88 Gus R Douglass Lane	8571.43
	1	18 Anna Lee Circle	8571.43
	1	32 Anna Lee Circle	8571.43
	1	68 Anna Lee Circle	8571.43
	1	72 Anna Lee Circle	8571.43
	1	74 Anna Lee Circle	8571.43
	1	49 Anna Lee Circle	8571.43
Provide a bid cost for each building individually and a total bid cost for the entire project			
		TOTAL BID	$60,000.01

Signature [illegible]

We, the undersigned, having examined the site and being familiar with the local conditions affecting the cost of the work and also being familiar with the general conditions to bidders, drawings, and specifications, hereby propose to furnish all materials, equipment, and labor to complete all work in a workman-like manner as described in the bidding documents.

West Virginia State Code 21-11-11 requires any prospective bidder to include the contractor's license number on their bid.

Contractor's Name: Mountain Air Sheet Metal

Contractor's License No.: WV047396

Agency_____
REQ.P.O#_____

BID BOND

KNOW ALL MEN BY THESE PRESENTS, That we, the undersigned, _____ _____ of _____, _____, as Principal, and _____ _____of _____, _____, a corporation organized and existing under the laws of the State of ___ _____ with its principal office in the City of _____, as Surety, are held and firmly bound unto the State of West Virginia, as Obligee, in the penal sum of _____ ($_____) for the payment of which, well and truly to be made, we jointly and severally bind ourselves, our heirs, administrators, executors, successors and assigns.

The Condition of the above obligation is such that whereas the Principal has submitted to the Purchasing Section of the Department of Administration a certain bid or proposal, attached hereto and made a part hereof, to enter into a contract in writing for

_____

_____

_____

NOW THEREFORE,

(a) If said bid shall be rejected, or

(b) If said bid shall be accepted and the Principal shall enter into a contract in accordance with the bid or proposal attached hereto and shall furnish any other bonds and insurance required by the bid or proposal, and shall in all other respects perform the agreement created by the acceptance of said bid, then this obligation shall be null and void, otherwise this obligation shall remain in full force and effect. It is expressly understood and agreed that the liability of the Surety for any and all claims hereunder shall, in no event, exceed the penal amount of this obligation as herein stated.

The Surety, for the value received, hereby stipulates and agrees that the obligations of said Surety and its bond shall be in no way impaired or affected by any extension of the time within which the Obligee may accept such bid, and said Surety does hereby waive notice of any such extension.

IN WITNESS WHEREOF, Principal and Surety have hereunto set their hands and seals, and such of them as are corporations have caused their corporate seals to be affixed hereunto and these presents to be signed by their proper officers, this _____day of _____, 20____.

Principal Corporate Seal

_____
(Name of Principal)

By_____
(Must be President or Vice President)

_____
(Title)

Surety Corporate Seal

_____
(Name of Surety)

_____
Attorney-in-Fact

IMPORTANT – Surety executing bonds must be licensed in West Virginia to transact surety insurance. Raised corporate seals must be affixed, a power of attorney must be attached.

AGR1203

State of West Virginia
DRUG FREE WORKPLACE CONFORMANCE AFFIDAVIT
***West Virginia Code* §21-1D-5**

STATE OF West Virginia

COUNTY OF Kanawha, **TO-WIT:**

I, Holden Earls, after being first duly sworn, depose and state as follows:

1. I am an employee of Mountain Air Sheet Metal (Company Name); and,

2. I do hereby attest that Mountain Air Sheet Metal (Company Name)

   maintains a valid written drug free workplace policy and that such policy is in compliance with ***West Virginia Code*** §21-1D-5.

The above statements are sworn to under the penalty of perjury.

Mountain Air Sheet Metal
(Company Name)

By: Holden Earls

Title: Owner

Date: 8/22/2011

Taken, subscribed and sworn to before me this 22nd day of August.

By Commission expires May 9, 2018.

(Seal)

NOTARY PUBLIC OFFICIAL SEAL
CARA D. CHANEY
State of West Virginia
My Commission Expires May 9, 2018
419 First Ave So. Nitro, WV 25143

Cara D. Chaney
(Notary Public)

THIS AFFIDAVIT MUST BE SUBMITTED WITH THE BID IN ORDER TO COMPLY WITH WV CODE PROVISIONS. FAILURE TO INCLUDE THE AFFIDAVIT WITH THE BID SHALL RESULT IN DISQUALIFICATION OF THE BID.

BID BOND PREPARATION INSTRUCTIONS

AGENCY_____(A)_____
RFQ/RFP#_____(B)_____

(A) WV State Agency (Stated on Page 1 "Spending Unit") Request for Quotation Number (upper right corner of page #1)
(C) Your Company Name
(D) City, Location of your Company
(E) State, Location of your Company
(F) Surety Corporate Name
(G) City, Location of Surety
(H) State, Location of Surety
(I) State of Surety Incorporation
(J) City of Surety Incorporation
(K) Minimum amount of acceptable bid bond is 5% of total bid. You may state "5% of bid" or a specific amount on this line in words.
(L) Amount of bond in figures
(M) Brief Description of scope of work
(N) Day of the month
(O) Month
(P) Year
(Q) Name of Corporation
(R) Raised Corporate Seal of Principal
(S) Signature of President or Vice President
(T) Title of person signing
(U) Raised Corporate Seal of Surety
(V) Corporate Name of Surety
(W) Signature of Attorney in Fact of the Surety

NOTE: Dated, Power of Attorney with Raised Surety Seal must accompany this bid bond.

Bid Bond

KNOW ALL MEN BY THESE PRESENTS, That we, the undersigned, _____(C)_____ of _____(D)_____, _____(E)_____, as Principal, and _____(F)_____ of _____(G)_____, _____(H)_____, a corporation organized and existing under the laws of the State of _____(I)_____ with its principal office in the City of _____(J)_____, as Surety, are held and firmly bound unto The State of West Virginia, as Obligee, in the penal sum of _____(K)_____ ($_____(L)_____) for the payment of which, well and truly to be made, we jointly and severally bind ourselves, our heirs, administrators, executors, successors and assigns.

The Condition of the above obligation is such that whereas the Principal has submitted to the Purchasing Section of the Department of Administration a certain bid or proposal, attached hereto and made a part hereof to enter into a contract in writing for _____
_____(M)_____
_____
_____

NOW THEREFORE.

(a) If said bid shall be rejected, or

(b) If said bid shall be accepted and the Principal shall enter into a contract in accordance with the bid or proposal attached hereto and shall furnish any other bonds and insurance required by the bid or proposal, and shall in all other respects perform the agreement created by the acceptance of said bid then this obligation shall be null and void, otherwise this obligation shall remain in full force and effect. It is expressly understood and agreed that the liability of the Surety for any and all claims hereunder shall, in no event, exceed the penal amount of this obligation as herein stated

The Surety for value received, hereby stipulates and agrees that the obligations of said Surety and its bond shall be in no way impaired or affected by any extension of time within which the Obligee may accept such bid: and said Surety does hereby waive notice of any such extension.

IN WITNESS WHEREOF, Principal and Surety have hereunto set their hands and seals, and such of them as are corporations have caused their corporate seals to be affixed hereto and these presents to be signed by their proper officers, this ____(N)____ day of _____(O)_____, 20____(P)____.

Principal Corporate Seal _____(Q)_____
(Name of Principal)

(R) By_____(S)_____
(Must be President or Vice President)

_____(T)_____
Title

(U)
Surety Corporate Seal _____(V)_____
(Name of Surety)

_____(W)_____
Attorney-in-Fact

IMPORTANT – Surety executing bonds must be licensed in West Virginia to transact surety insurance. Raised Corporate Seals must be affixed and a Power of Attorney must be attached.

RFQ No. AGR1203

STATE OF WEST VIRGINIA
Purchasing Division

PURCHASING AFFIDAVIT

West Virginia Code §5A-3-10a states: No contract or renewal of any contract may be awarded by the state or any of its political subdivisions to any vendor or prospective vendor when the vendor or prospective vendor or a related party to the vendor or prospective vendor is a debtor and the debt owed is an amount greater than one thousand dollars in the aggregate.

DEFINITIONS:
"Debt" means any assessment, premium, penalty, fine, tax or other amount of money owed to the state or any of its political subdivisions because of a judgment, fine, permit violation, license assessment, defaulted workers' compensation premium, penalty or other assessment presently delinquent or due and required to be paid to the state or any of its political subdivisions, including any interest or additional penalties accrued thereon.

"Debtor" means any individual, corporation, partnership, association, limited liability company or any other form or business association owing a debt to the state or any of its political subdivisions. "Political subdivision" means any county commission; municipality; county board of education; any instrumentality established by a county or municipality; any separate corporation or instrumentality established by one or more counties or municipalities, as permitted by law; or any public body charged by law with the performance of a government function or whose jurisdiction is coextensive with one or more counties or municipalities. "Related party" means a party, whether an individual, corporation, partnership, association, limited liability company or any other form or business association or other entity whatsoever, related to any vendor by blood, marriage, ownership or contract through which the party has a relationship of ownership or other interest with the vendor so that the party will actually or by effect receive or control a portion of the benefit, profit or other consideration from performance of a vendor contract with the party receiving an amount that meets or exceed five percent of the total contract amount.

EXCEPTION: The prohibition of this section does not apply where a vendor has contested any tax administered pursuant to chapter eleven of this code, workers' compensation premium, permit fee or environmental fee or assessment and the matter has not become final or where the vendor has entered into a payment plan or agreement and the vendor is not in default of any of the provisions of such plan or agreement.

Under penalty of law for false swearing (***West Virginia Code*** §61-5-3), it is hereby certified that the vendor affirms and acknowledges the information in this affidavit and is in compliance with the requirements as stated.

WITNESS THE FOLLOWING SIGNATURE

Vendor's Name: Mountain Air Sheet Metal

Authorized Signature: [signature] Date: 8/22/2011

State of WV

County of Kanawha, to-wit:

Taken, subscribed, and sworn to before me this 22nd day of August, 2011.

My Commission expires May 9, 2018.

AFFIX SEAL HERE

NOTARY PUBLIC OFFICIAL SEAL
CARA D. CHANEY
State of West Virginia
My Commission Expires May 9, 2018
419 First Ave So. Nitro, WV 25143

NOTARY PUBLIC Cara D. Chaney

State of West Virginia
Department of Administration
Purchasing Division
2019 Washington Street East
Post Office Box 50130
Charleston, WV 25305-0130

Request for Quotation

RFQ NUMBER	PAGE
AGR1203	1

ADDRESS CORRESPONDENCE TO ATTENTION OF:
KRISTA FERRELL
304-558-2596

VENDOR
Mountain Air Sheetmetal
5298 Stranahan Drive
Cross Lanes WV. 25313

SHIP TO
DEPARTMENT OF AGRICULTURE
BUILDINGS & GROUNDS DIVISION
BUILDING 17
4720 BRENDA LANE
CHARLESTON, WV
25312 304-558-2221

DATE PRINTED	TERMS OF SALE	SHIP VIA	F.O.B.	FREIGHT TERMS
08/17/2011				

BID OPENING DATE: 08/23/2011 BID OPENING TIME 01:30PM

LINE	QUANTITY	UOP	CAT. NO.	ITEM NUMBER	UNIT PRICE	AMOUNT

********** ADDENDUM NO. 1 **********

THIS ADDENDUM IS ISSUED TO:

1) PROVIDE THE FOLLOWING CLARIFICATION.

PER WEST VIRGINIA LEGISLATIVE RULE 148 CSR 1-6.4.4 RESIDENT VENDOR PREFERENCE DOES NOT APPLY TO CONSTRUCTION PROJECTS.

2) PROVIDE THE ATTACHED CHANGES TO THE SPEIFICATION.

3) PROVIDE THE ATTACHED MANDATORY PRE-BID SIGN IN SHEET.

BID OPENING DATE REMAINS: 08/23/2011
BID OPENING TIME REMAINS: 1:30PM

********** END ADDENDUM NO. 01 **********

SEE REVERSE SIDE FOR TERMS AND CONDITIONS

SIGNATURE	TELEPHONE	DATE
TITLE	FEIN	ADDRESS CHANGES TO BE NOTED ABOVE

WHEN RESPONDING TO RFQ, INSERT NAME AND ADDRESS IN SPACE ABOVE LABELED 'VENDOR'

State of West Virginia
Department of Administration
Purchasing Division
2019 Washington Street East
Post Office Box 50130
Charleston, WV 25305-0130

Request for Quotation

RFQ NUMBER	PAGE
AGR1203	2

ADDRESS CORRESPONDENCE TO ATTENTION OF:
KRISTA FERRELL
304-558-2596

VENDOR
RFQ COPY
TYPE NAME/ADDRESS HERE

SHIP TO
DEPARTMENT OF AGRICULTURE
BUILDINGS & GROUNDS DIVISION
BUILDING 17
4720 BRENDA LANE
CHARLESTON, WV
25312 304-558-2221

DATE PRINTED	TERMS OF SALE	SHIP VIA	F.O.B.	FREIGHT TERMS
08/17/2011				

BID OPENING DATE: 08/23/2011 BID OPENING TIME 01:30PM

LINE	QUANTITY	UOP	CAT. NO.	ITEM NUMBER	UNIT PRICE	AMOUNT
0001	1	LS		968-42		
	HVAC UPGRADES FOR 7 BLDS @ GUS R. DOUGLAS CENTER					
	****** THIS IS THE END OF RFQ AGR1203 ****** TOTAL:					

SEE REVERSE SIDE FOR TERMS AND CONDITIONS

SIGNATURE	TELEPHONE	DATE
TITLE	FEIN	ADDRESS CHANGES TO BE NOTED ABOVE

WHEN RESPONDING TO RFQ, INSERT NAME AND ADDRESS IN SPACE ABOVE LABELED 'VENDOR'

State of West Virginia
DEPARTMENT OF AGRICULTURE
Gus R. Douglass, Commissioner

Janet L. Fisher
Deputy Commissioner

Bob Tabb
Deputy Commissioner

Steve Miller
Assistant Commissioner

ADDENDUM ARG1203

HVAC UPGRADES FOR 7 BLDS @

GUS R DOUGLASS AGRICULTURE CENTER AT GUTHRE

On page 16 of the RFQ the location for the new condensing units were indicate on line "D" as follows:

IV. GENERAL SPECIFICATIONS

A. Gas furnaces must be rated 95% efficient or greater.
B. Air Conditioning units must be rated 14.5 SEER or greater and utilize R-410 refrigerant.
C. All equipment shall be compatible with existing ductwork.
D. Condensing units on all locations except 18 Anna Lee Circle may be installed on the existing pads. 18 Anna Lee Circle condensing unit location will be marked with a white painted stake.

Changes to those locations are now changed as follows:

D. Condensing units for buildings located at 18, 32, & 68 Anna Lee Circle will be installed on concrete or poly pads at the locations marked with white stakes. Condensing units on all other locations may be installed on the existing pads.

Date: August 3, 2011

SIGN IN SHEET

Request for Proposal No.: AGR 1203

Please Print

*PLEASE BE SURE TO PRINT LEGIBLY - IF POSSIBLE, LEAVE A BUSINESS CARD

FIRM & REPRESENTATIVE NAME	MAILING ADDRESS	TELEPHONE/FAX/CELL NUMBERS
Company: Mountain Air Sheetmetal	5298 Strawhan Dr.	PHONE: 304 553-2781
Rep: John Shea	Cross Lanes WV	TOLL FREE/ CELL: 304-415-7187
Email Address: JShea c21@Suddenlink.net	25313	FAX: 304-586-2613
Company: Elco Mechanical	P.O. Box 349	PHONE: 304 346 0546
Rep: William E. Ashworth	Chas WV 25322	TOLL FREE/ CELL:
Email Address: elco@suddenlinkmail.com		FAX: 304 346 0548
Company: David Darnold Co.	P.O. Box 8482	PHONE: 304-744-8479
Rep: Dave Darnold Jr	South Charleston WV	TOLL FREE/ CELL: 304-807-3444
Email Address: davejr@darnoldhvac.com	25303	FAX: 304-744-8491
Company: Harris Bros.	1533 Hansford St	PHONE: 304 343 5566
Rep: Grey Harris	Charleston, WV 25311	TOLL FREE/ CELL:
Email Address: greyoharris@frontier.com		FAX: 304 343 5568

Date: August 3, 2011

SIGN IN SHEET

Request for Proposal No.: AGR 1203

Please Print

*PLEASE BE SURE TO PRINT LEGIBLY - IF POSSIBLE, LEAVE A BUSINESS CARD

FIRM & REPRESENTATIVE NAME	MAILING ADDRESS	TELEPHONE/FAX/CELL NUMBERS	
Company: Mountain Air Sheet Metal	5298 Stranahan Dr	PHONE:	(304) 553-2281
Rep: Travis P. Baker	Cross Lanes WV 25313	TOLL FREE/ CELL:	(304) 419-0855
Email Address: 5298 Stranahan Dr Cross Lanes WV 25313		FAX:	(304) 586-2613
Company: Casto Technical		PHONE:	304-346-0549
Rep: Paul Lancaster		TOLL FREE/ CELL:	304-543-4838
Email Address: 540 Leon Sullivan Way		FAX:	304-345-4202
Company: Alpha Mechanical Serv		PHONE:	304 767-5610
Rep: Mike Hatfield		TOLL FREE/ CELL:	1-888-212-6324
Email Address: ANDY.BARNETT@AAMSERVICE.Com		FAX:	304 766-1008
Company: Casto Technical	540 Leon Sullivan Way	PHONE:	304-346-0549
Rep: Traci B. Ray	Charleston, WV 25301	TOLL FREE/ CELL:	304-373-7246
Email Address: tray@castotech.com		FAX:	304-346-8920

Date: August 3, 2011

SIGN IN SHEET

Please Print

Request for Proposal No.: AGR 1203

*PLEASE BE SURE TO PRINT LEGIBLY - IF POSSIBLE, LEAVE A BUSINESS CARD

FIRM & REPRESENTATIVE NAME	MAILING ADDRESS	TELEPHONE/FAX/CELL NUMBERS
Company: PLEASANT AIR	5200 EMERSON AVE PARKERSBURG WV 26105	PHONE: 304-428-5799
Rep: GARY WARNER		TOLL FREE/ CELL: 304-483-7550
Email Address: PLEASANT AIR @ HOTMAIL.COM		FAX: 304-485-7601
Company: SHEET METAL WORKERS 33	5038 WEST WASHINGTON	PHONE: 304-776-5720
Rep: JIM KING	CHARLESTON WV 25313	TOLL FREE/ CELL: 304-380-7271
Email Address: JKING @ SMWLU33.ORG		FAX: 304-776-5721
Company: Tri-State Roofing & Sheet Metal	PO Box 1231	PHONE: 304-755-8135
Rep: Terry Morgan	Charleston, WV 25324	TOLL FREE/ CELL: 304-419-0816
Email Address: tmorgan@tri-stateservice.com		FAX: 304-755-5275
Company: Pennington Plumbing & Heating	301 George St.	PHONE: 304-673-9408
Rep: Eric Mahaffey	Beckley WV 25801	TOLL FREE/ CELL:
Email Address: ericmahaffey@beckleymechanical.com		FAX: 304-253-1123

Goodman
Air Conditioning & Heating

GMVC95 & GCVC95/9

GMVC95: up to 95% AFUE
GCVC95: up to 95% AFUE
GCVC9: up to 93% AFUE

ComfortNet™-Compatible Multi-Position, Two-Stage Variable-Speed Gas Furnace

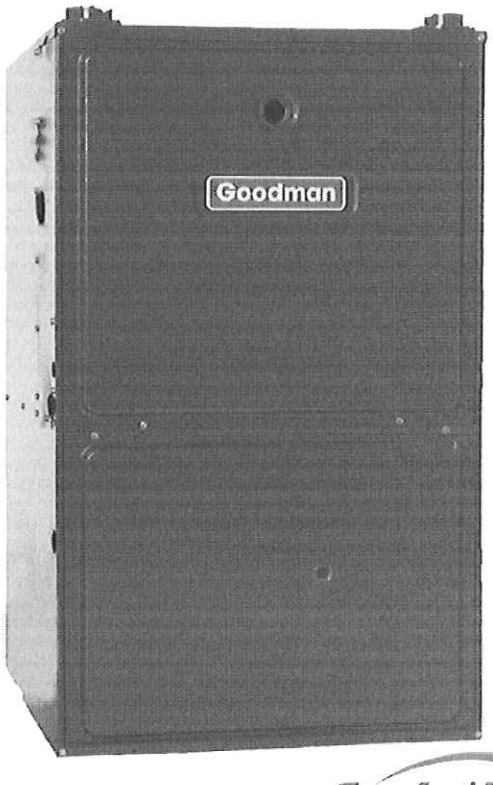

ComfortNet CONTROL SYSTEM

Standard Features

- Dual-diameter tubular heat exchanger
- Two-stage gas valve operates with two-stage or single-stage thermostats
- ComfortNet™ Communications System compatible
- Efficient and quiet variable-speed ECM circulator motor gently ramps up or down according to heating or cooling demand
- 120V Silicon Nitride igniter designed for long igniter life
- Furnace control board with self-diagnostics, color-coded low-voltage terminals, and provisions for electronic air cleaner and 120-volt or 24-volt humidifiers
- Low constant fan allows homeowner to activate very low speed to efficiently circulate air throughout the home. This setting costs as little as a 100-watt light bulb to operate.
- Dual-certified for sealed combustion direct vent (2-pipe) or non-direct vent (1-pipe) applications
- Quiet two-speed induced draft blower
- All models comply with California NOx emissions standards

Cabinet Features

- Fully insulated, heavy-gauge steel cabinet with durable baked-enamel finish
- Foil-faced insulation lines the heat exchanger
- Easy-to-install top venting is standard; alternate flue/vent connections on some models
- Designed for multi-position installation – GMVC95: upflow, horizontal left or right; GCVC95/9: downflow, horizontal left or right
- Airtight solid bottom for side return applications and easy-cut tabs for effortless removal in bottom air inlet applications
- Convenient left or right connection for gas/electric service
- Coil and furnace fit flush for most installations

Contents

LIFETIME HEAT EXCHANGER LIMITED WARRANTY* | 10 YEAR UNIT REPLACEMENT LIMITED WARRANTY* | 10 YEAR PARTS LIMITED WARRANTY* | AHRI CERTIFIED | ETL | ENERGY STAR

* Complete warranty details available from your local dealer or at www.goodmanmfg.com. To receive the Lifetime Heat Exchanger Limited Warranty (good for as long as you own your home), 10-Year Unit Replacement Limited Warranty and 10-Year Parts Limited Warranty, online registration must be completed within 60 days of installation. Online registration is not required in California or Québec.

DARE TO COMPARE

NOMENCLATURE

G	M	V	C	95	070	4	C	X	A	A
1	2	3	4	5,6	7,8,9	10	11	12	13	14

Brand
- G Goodman® Brand

Airflow Direction
- C Downflow/Horizontal
- D Dedicated Downflow
- H High Airflow
- K Dedicated Upflow
- M Upflow/Horizontal

Description/Motor
- V Two-Stage/Variable-speed
- H Two-Stage/Multi-speed
- S Single-Stage/Multi-speed
- E Two-Stage/High-Efficiency

SystemType
- C ComfortNet™ Communicating System

AFUE
- 95 95%
- 9 90%+
- 8 80%

MBTU/h
- 045: 45,000
- 070: 70,000
- 090: 90,000
- 115: 115,000
- 140: 140,000

Maximum CFM @ 0.5" ESP
- 3 1200
- 4 1600
- 5 2000

Cabinet Width
- A 14"
- B 17½"
- C 21"
- D 24½"

NOx
- N Natural Gas
- X Low NOx

Revisions
- Major and minor revisions

Important EnergyStar Notice: EnergyStar ratings are dependent upon conditions beyond equipment installation. Proper sizing and installation of equipment is critical to achieve optimal performance. Split system air conditioners and heat pumps must be matched with appropriate coil components to meet EnergyStar criteria. Ask your contractor for details or visit www.energystar.gov.

SPECIFICATIONS

	GMVC95 0453BX	GMVC95 0704CX	GMVC95 0905CX	GMVC95 0905DX	GMVC95 1155DX	GCVC95 0714CX	GCVC95 0915DX	GCVC9 1155DX
HEATING CAPACITY								
High Fire Input[1]	46,000	69,000	92,000	92,000	115,000	69,000	92,000	115,000
High Fire Output[1]	45,000	67,000	90,000	90,000	109,000	65,000	87,000	109,000
Low Fire Input[1]	32,000	48,000	64,000	64,000	80,000	48,000	64,000	80,000
Low Fire Output[1]	30,800	46,400	61,700	61,700	77,400	45,000	60,100	77,400
AFUE[2]	95	95	95	95	95	95	95	93
Tons AC @ 0.5" ESP	1.5 - 3.0	1.5 - 4.0	2.0 - 5.0	2.0 - 5.0	2.0 - 5.0	1.5 - 4.0	2.0 - 5.0	2.0 - 5.0
Temperature Rise Range (°F)	30 - 60	30 - 60	30 - 60	30 - 60	30 - 60	25-55	25-55	40-70
CIRCULATOR BLOWER								
Size (D x W)	10" x 8"	10" x 10"	11" x 10"	11" x 10"	11" x 10"	10" x 10"	11" x 10"	11" x 10"
Horespower @ 1050 RPM	½	¾	1	1	1	¾	1	1
Speed	Variable					Variable		
Vent Diameter[3]	2"	2"	3"	3"	3"	2"	3"	3"
No. of Burners	2	3	4	4	5	3	4	5
Disposable Filter (in²)	288	384	480	480	486	384	480	486
ELECTRICAL DATA								
Min. Circuit Ampacity (amps)[4]	11.3	14.1	14.4	14.4	14.4	11.2	15.0	14.4
Max. Overcurrent Protection[5]	15 amps	15 amps	15 amps	15 amps	15 amps	15 amps	15 amps	15 amps
SHIP WEIGHT (LBS)	121	145	160	160	170	139	165	160

[1] Natural Gas BTU/h

[2] DOE AFUE based upon Isolated Combustion System (ICS)

[3] Installer must supply one or two PVC pipes: one for combustion air (optional) and one for the flue outlet (required). Vent pipe must be either 2" or 3" in diameter, depending upon furnace input, number of elbows, length of run and installation (1 or 2 pipes). The optional Combustion Air Pipe is dependent on installation/code requirements and must be 2" or 3" diameter PVC.

[4] Minimum Circuit Ampacity = (1.25 x Circulator Blower Amps) + ID Blower amps. Wire size should be determined in accordance with National Electrical Codes. Extensive wire runs will require larger wire sizes.

[5] Maximum Overcurrent Protection Device refers to maximum recommended fuse or circuit breaker size. May use fuses or HACR-type circuit breakers of the same size as noted.

NOTES

- All furnaces are manufactured for use on 115 VAC, 60 Hz, single-phase electrical supply.
- Gas Service Connection ½" FPT
- Important: Size fuses and wires properly and make electrical connections in accordance with the National Electrical Code and/or all existing local codes.

GMVC95 DIMENSIONS

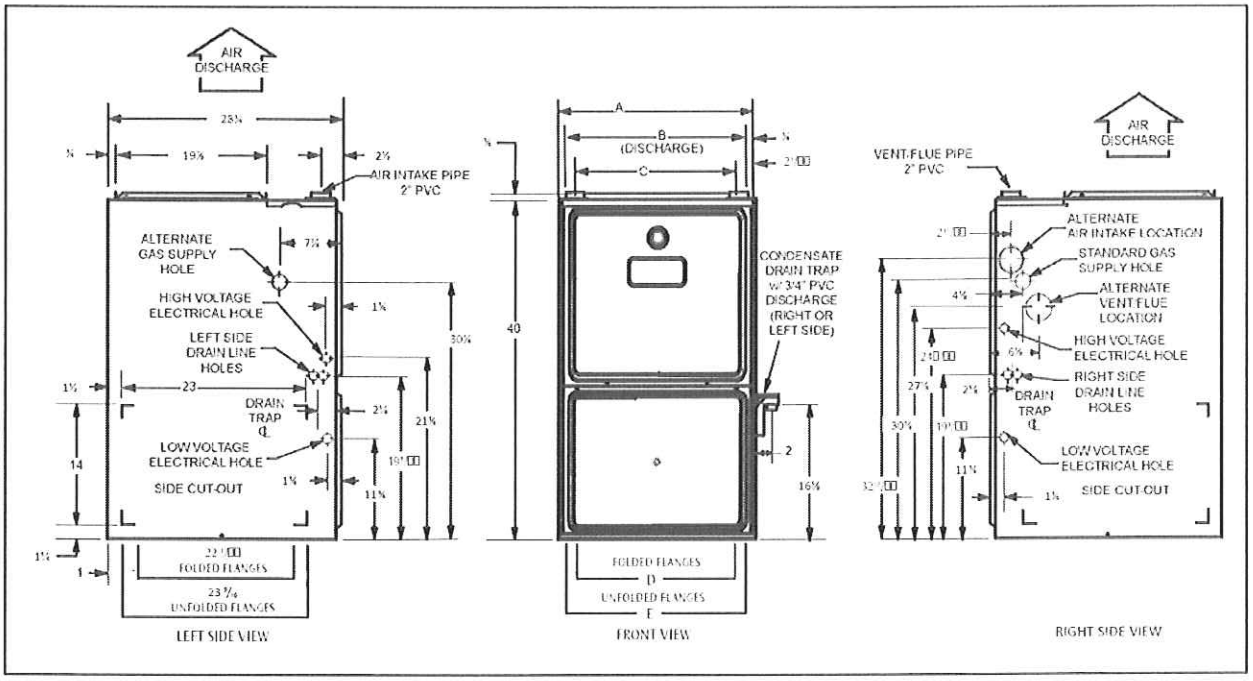

MODEL	A	B	C	D	E
GMVC950453BX	17½"	16"	13⅛"	12⅛"	13⅝"
GMVC950704CX	21"	19½"	16⅛"	16	17½"
GMVC950905CX	21"	19½"	16⅛"	16	17½"
GMVC950905DX	24½"	19½"	16⅛"	16	17½"
GMVC951155DX	24½"	23"	20⅝"	19⅛"	20⅞"

NOTES:

- Installer must supply one or two PVC pipes: one for combustion air (optional) and one for the flue outlet (required). Vent pipe must be either 2" or 3" in diameter, depending upon furnace input, number of elbows, length of run and installation (1 or 2 pipes). The optional Combustion Air Pipe is dependent on installation/code requirements and must be 2" or 3" diameter PVC.
- Line voltage wiring can enter through the right or left side of the furnace. Low-voltage wiring can enter through the right or left side of furnace.
- Conversion kits for high-altitude natural gas operation are available. Contact your Goodman distributor or dealer for details.
- Installer must supply following gas line fittings, according to which entrance is used:
  Left—Two 90º elbows, one close nipple, straight pipe
  Right—Straight pipe to reach gas valve
- For bottom return: Failure to unfold flanges may reduce airflow by up to 18%. This could result in performance and noise issues.

MINIMUM CLEARANCES TO COMBUSTIBLE MATERIALS

POSITION	SIDES	REAR	FRONT	BOTTOM	FLUE	TOP
Upflow	0"	0"	3"	C	0"	1"
Horizontal	6"	0"	3"	C	0"	6"

C = If placed on combustible floor, the floor MUST be wood ONLY.

NOTES

- For servicing or cleaning, a 24" front clearance is required.
- Unit connections (electrical, flue and drain) may necessitate greater clearances than the minimum clearances listed above.
- In all cases, accessibility clearance must take precedence over clearances from the enclosure where accessibility clearances are greater.

GCVC95/9 DIMENSIONS

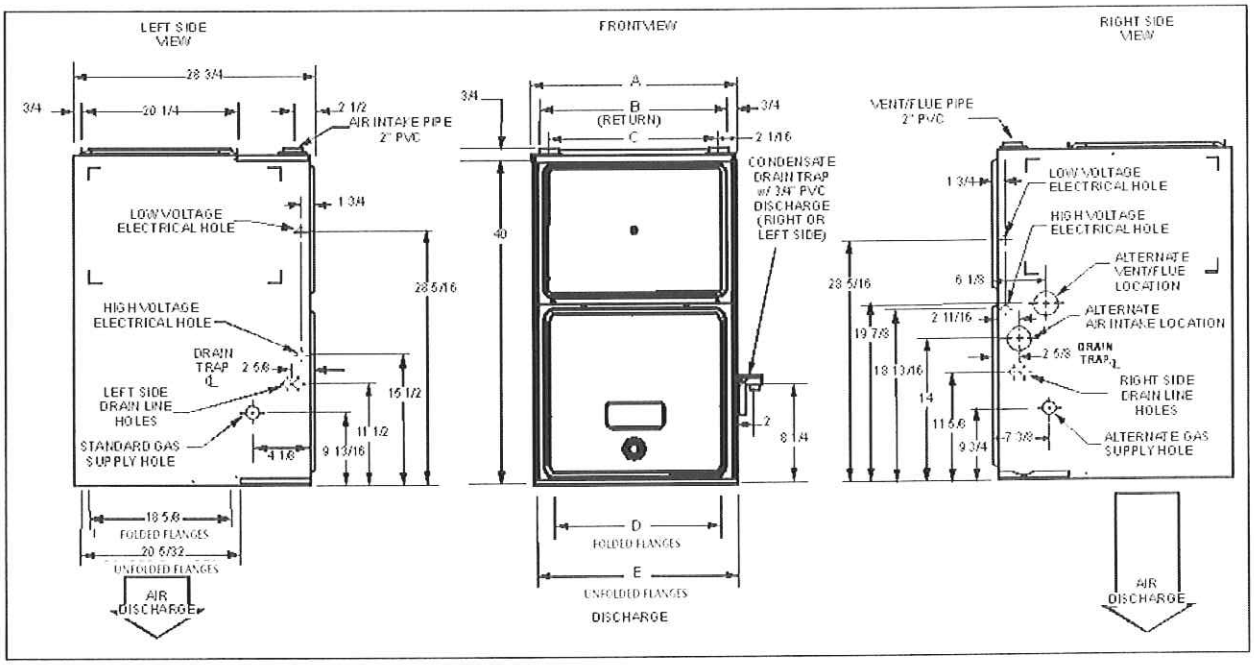

MODEL	A	B	C	D	E
GCVC950714CX	21"	19½"	16⅛"	18"	19½"
GCVC950915DX	24½"	23"	20⅝"	21½"	23"
GCVC91155DX	24½"	23"	20⅝"	21½"	23"

NOTES:

- Installer must supply one or two PVC pipes: one for combustion air (optional) and one for the flue outlet (required). Vent pipe must be either 2" or 3" in diameter, depending upon furnace input, number of elbows, length of run, and installation (1 or 2 pipes). The optional Combustion Air Pipe is dependent on installation/code requirements and must be 2" or 3" diameter PVC.
- Line voltage wiring can enter through the right or left side of the furnace. Low-voltage wiring can enter through the right or left side of furnace.
- Conversion kits for high-altitude natural gas operation are available. Contact your Goodman distributor or dealer for details.
- Installer must supply following gas line fittings, according to which entrance is used:
  Left—Two 90º elbows, one close nipple, straight pipe
  Right—Straight pipe to reach gas valve
- For bottom return: Failure to unfold flanges may reduce airflow by up to 18%. This could result in performance and noise issues.

MINIMUM CLEARANCES TO COMBUSTIBLE MATERIALS

POSITION	SIDES	REAR	FRONT	BOTTOM	FLUE	TOP
Downflow	0"	0"	3"	NC	0"	1"
Horizontal	6"	0"	3"	C	0"	6"

C = If placed on combustible floor, the floor MUST be wood ONLY.

NC = For installation on non-combustible floors only. A combustible floor sub-base must be used for installations on combustible flooring.

NOTES

- For servicing or cleaning, a 24" front clearance is required.
- Unit connections (electrical, flue and drain) may necessitate greater clearances than the minimum clearances listed above.
- In all cases, accessibility clearance must take precedence over clearances from the enclosure where accessibility clearances are greater.

GMVC95 AIRFLOW DATA

COOLING SPEEDS

GMVC950453BX					
HIGH STAGE			LOW STAGE		
TAP	ADJUST	CFM*	TAP	ADJUST	CFM*
A	Minus(-)	540	A	Minus(-)	351
	Normal	600		Normal	390
	Plus (+)	660		Plus (+)	429
B	Minus(-)	720	B	Minus(-)	468
	Normal	800		Normal	520
	Plus (+)	880		Plus (+)	572
C	Minus(-)	900	C	Minus(-)	585
	Normal	1000		Normal	650
	Plus (+)	1100		Plus (+)	715
D	Minus(-)	1080	D	Minus(-)	702
	Normal	1200		Normal	780
	Plus (+)	1320		Plus (+)	858

GMVC950704CX					
HIGH STAGE			LOW STAGE		
TAP	ADJUST	CFM*	TAP	ADJUST	CFM*
A	Minus(-)	540	A	Minus(-)	351
	Normal	600		Normal	390
	Plus (+)	660		Plus (+)	429
B	Minus(-)	720	B	Minus(-)	468
	Normal	800		Normal	520
	Plus (+)	880		Plus (+)	572
C	Minus(-)	990	C	Minus(-)	644
	Normal	1100		Normal	715
	Plus (+)	1210		Plus (+)	787
D	Minus(-)	1286	D	Minus(-)	836
	Normal	1429		Normal	929
	Plus (+)	1572		Plus (+)	1022

GMVC950905CX					
HIGH STAGE			LOW STAGE		
TAP	ADJUST	CFM*	TAP	ADJUST	CFM*
A	Minus(-)	729	A	Minus(-)	495
	Normal	810		Normal	550
	Plus (+)	891		Plus (+)	605
B	Minus(-)	990	B	Minus(-)	693
	Normal	1100		Normal	770
	Plus (+)	1210		Plus (+)	847
C	Minus(-)	1323	C	Minus(-)	900
	Normal	1470		Normal	1000
	Plus (+)	1617		Plus (+)	1100
D	Minus(-)	1629	D	Minus(-)	1125
	Normal	1810		Normal	1250
	Plus (+)	1991		Plus (+)	1375

GMVC950905DX					
HIGH STAGE			LOW STAGE		
TAP	ADJUST	CFM*	TAP	ADJUST	CFM*
A	Minus(-)	720	A	Minus(-)	468
	Normal	800		Normal	520
	Plus (+)	880		Plus (+)	572
B	Minus(-)	900	B	Minus(-)	644
	Normal	1000		Normal	715
	Plus (+)	1100		Plus (+)	787
C	Minus(-)	1260	C	Minus(-)	819
	Normal	1400		Normal	910
	Plus (+)	1540		Plus (+)	1001
D	Minus(-)	1620	D	Minus(-)	1053
	Normal	1800		Normal	1170
	Plus (+)	1980		Plus (+)	1287

GMVC951155DX					
HIGH STAGE			LOW STAGE		
TAP	ADJUST	CFM*	TAP	ADJUST	CFM*
A	Minus(-)	720	A	Minus(-)	468
	Normal	800		Normal	520
	Plus (+)	880		Plus (+)	572
B	Minus(-)	990	B	Minus(-)	644
	Normal	1100		Normal	715
	Plus (+)	1210		Plus (+)	787
C	Minus(-)	1260	C	Minus(-)	819
	Normal	1400		Normal	910
	Plus (+)	1540		Plus (+)	1001
D	Minus(-)	1620	D	Minus(-)	1053
	Normal	1800		Normal	1170
	Plus (+)	1980		Plus (+)	1287

* @ .1" - .8" w.c. ESP

NOTES:

- All furnaces ship as high speed for cooling. Installer must adjust blower speed as needed.
- For most jobs, about 400 CFM per ton when cooling is desirable.
- Do not operate above .5" w.c. ESP in heating mode. Operating CFM between .5" and .8" w.c. is tabulated for cooling purposes only.

GMVC95 AIRFLOW DATA (CONT.)

HEATING SPEEDS

GMVC950453BX (RISE RANGE: 30 - 60°F)				
TAP	ADJUST	LOW-STAGE CFM *	HIGH-STAGE CFM *	RISE (°F)
A	Minus(-)	495	713	57
	Normal	550	792	41
	Plus (+)	605	871	46
B	Minus(-)	540	778	52
	Normal	600	864	47
	Plus (+)	660	950	43
C	Minus(-)	585	842	48
	Normal	650	936	43
	Plus (+)	715	1,030	39
D	Minus(-)	630	907	45
	Normal	700	1,008	40
	Plus (+)	770	1,109	36

GMVC950704CX RISE RANGE: 30 - 60°F)				
TAP	ADJUST	LOW-STAGE CFM *	HIGH-STAGE CFM *	RISE (°F)
A	Minus(-)	756	1,089	56
	Normal	840	1,210	50
	Plus (+)	924	1,331	46
B	Minus(-)	828	1,192	51
	Normal	920	1,325	46
	Plus (+)	1,012	1,457	42
C	Minus(-)	900	1,296	47
	Normal	1,000	1,440	42
	Plus (+)	1,100	1,584	38
D	Minus(-)	972	1,400	43
	Normal	1,080	1,555	39
	Plus (+)	1,188	1,711	35

GMVC950905CX (Rise Range: 30 - 60°F)				
TAP	ADJUST	LOW-STAGE CFM *	HIGH-STAGE CFM *	RISE (°F)
A	Minus(-)	945	1,341	60
	Normal	1,050	1,490	54
	Plus (+)	1,155	1,639	49
B	Minus(-)	1,008	1,413	57
	Normal	1,120	1,570	51
	Plus (+)	1,232	1,727	47
C	Minus(-)	1,080	1,521	53
	Normal	1,200	1,690	48
	Plus (+)	1,320	1,859	43
D	Minus(-)	1,125	1,602	50
	Normal	1,250	1,780	45
	Plus (+)	1,375	1,958	41

GMVC950905DX (Rise Range: 30 - 60°F)				
TAP	ADJUST	LOW-STAGE CFM *	HIGH-STAGE CFM *	RISE (°F)
A	Minus(-)	1,013	1,458	55
	Normal	1,125	1,620	50
	Plus (+)	1,238	1,782	45
B	Minus(-)	1,076	1,549	52
	Normal	1,195	1,721	47
	Plus (+)	1,315	1,893	43
C	Minus(-)	1,139	1,640	49
	Normal	1,265	1,822	44
	Plus (+)	1,392	2,004	40
D	Minus(-)	1,202	1,730	47
	Normal	1,335	1,922	42
	Plus (+)	1,469	2,114	38

GMVC951155DX (RISE RANGE: 35 - 65°F)				
TAP	ADJUST	LOW-STAGE CFM *	HIGH-STAGE CFM *	RISE (°F)
A	Minus(-)	1,107	1,594	63
	Normal	1,230	1,771	57
	Plus (+)	1,353	1,948	52
B	Minus(-)	1,139	1,639	62
	Normal	1,265	1,822	56
	Plus (+)	1,392	2,004	50
C	Minus(-)	1,170	1,685	60
	Normal	1,300	1,872	54
	Plus (+)	1,430	2,059	49
D	Minus(-)	1,202	1,730	58
	Normal	1,335	1,922	53
	Plus (+)	1,469	2,115	48

* @ .1" - .5" w.c. ESP

NOTES

- All furnaces ship as high speed for cooling. Installer must adjust blower speed as needed.
- For most jobs, about 400 CFM per ton when cooling is desirable.
- Do not operate above .5" w.c. ESP in heating mode. Operating CFM between .5" and .8" w.c. is tabulated for cooling purposes only.

GCVC95 AIRFLOW DATA

GCVC950714CX COOLING SPEEDS					
HIGH STAGE			LOW STAGE		
TAP	ADJUST	CFM*	TAP	ADJUST	CFM*
A	Minus	594	A	Minus	324
	Normal	660		Normal	360
	Plus	726		Plus	396
B	Minus	747	B	Minus	468
	Normal	830		Normal	520
	Plus	913		Plus	572
C	Minus	1017	C	Minus	702
	Normal	1130		Normal	780
	Plus	1243		Plus	858
D	Minus	1314	D	Minus	864
	Normal	1460		Normal	960
	Plus	1606		Plus	1056

* @ .1" - .5" w.c. ESP

GCVC950714CX HEATING SPEEDS (RISE RANGE: 25 - 55°F)							
HIGH STAGE				LOW STAGE			
TAP	ADJUST	CFM*	RISE	TAP	ADJUST	CFM*	RISE
A	Minus	1107	55	A	Minus	783	77
	Normal	1230	49		Normal	870	69
	Plus	1353	45		Plus	957	63
B	Minus	1215	50	B	Minus	855	71
	Normal	1350	45		Normal	950	64
	Plus	1485	41		Plus	1045	58
C	Minus	1323	46	C	Minus	936	65
	Normal	1470	41		Normal	1040	58
	Plus	1617	37		Plus	1144	53
D	Minus	1440	42	D	Minus	1017	59
	Normal	1600	38		Normal	1130	53
	Plus	1760	34		Plus	1243	49

GCVC950915DX COOLING SPEEDS					
HIGH STAGE			LOW STAGE		
TAP	ADJUST	CFM*	TAP	ADJUST	CFM*
A	Minus	729	A	Minus	504
	Normal	810		Normal	560
	Plus	891		Plus	616
B	Minus	999	B	Minus	666
	Normal	1110		Normal	740
	Plus	1221		Plus	814
C	Minus	1287	C	Minus	828
	Normal	1430		Normal	920
	Plus	1573		Plus	1012
D	Minus	1674	D	Minus	1071
	Normal	1860		Normal	1190
	Plus	2046		Plus	1309

* @ .1" - .5" w.c. ESP

GCVC950915DX HEATING SPEEDS (RISE RANGE: 25 - 55°F)							
HIGH STAGE				LOW STAGE			
TAP	ADJUST	CFM*	RISE	TAP	ADJUST	CFM*	RISE
A	Minus	1458	55	A	Minus	1008	80
	Normal	1620	50		Normal	1120	72
	Plus	1782	45		Plus	1232	65
B	Minus	1575	51	B	Minus	1098	73
	Normal	1750	46		Normal	1220	66
	Plus	1925	42		Plus	1342	60
C	Minus	1674	48	C	Minus	1152	70
	Normal	1860	43		Normal	1280	63
	Plus	2046	39		Plus	1408	57
D	Minus	1773	45	D	Minus	1206	67
	Normal	1970	41		Normal	1340	60
	Plus	2167	37		Plus	1474	55

NOTES

- All furnaces ship as high speed for cooling. Installer must adjust blower speed as needed.
- For most jobs, about 400 CFM per ton when cooling is desirable.
- Do not operate above .5" w.c. ESP in heating mode. Operating CFM between .5" and .8" w.c. is tabulated for cooling purposes only.

GCVC9 AIRFLOW DATA

GCVC91155DX COOLING SPEEDS					
HIGH STAGE			LOW STAGE		
TAP	ADJUST	CFM*	TAP	ADJUST	CFM*
A	Minus(-)	705	A	Minus(-)	457
	Normal	783		Normal	508
	Plus (+)	861		Plus (+)	559
B	Minus(-)	982	B	Minus(-)	621
	Normal	1091		Normal	690
	Plus (+)	1200		Plus (+)	759
C	Minus(-)	1265	C	Minus(-)	815
	Normal	1406		Normal	906
	Plus (+)	1547		Plus (+)	997
D	Minus(-)	1628	D	Minus(-)	1049
	Normal	1809		Normal	1165
	Plus (+)	1990		Plus (+)	1282

* @ .1" - .5" w.c. ESP

GCVC91155DX HEATING SPEEDS (RISE RANGE: 40 - 70°F)							
HIGH STAGE				LOW STAGE			
TAP	ADJUST	CFM*	RISE	TAP	ADJUST	CFM*	RISE
A	Minus(-)	1583	63	A	Minus(-)	1093	63
	Normal	1759	56		Normal	1214	56
	Plus (+)	1935	51		Plus (+)	1335	51
B	Minus(-)	1612	61	B	Minus(-)	1106	61
	Normal	1791	55		Normal	1229	55
	Plus (+)	1970	50		Plus (+)	1352	50
C	Minus(-)	1654	60	C	Minus(-)	1166	60
	Normal	1838	54		Normal	1296	54
	Plus (+)	2022	49		Plus (+)	1426	49
D	Minus(-)	1690	59	D	Minus(-)	1172	59
	Normal	1878	53		Normal	1302	53
	Plus (+)	2066	48		Plus (+)	1432	48

NOTES

- All furnaces ship as high speed for cooling. Installer must adjust blower speed as needed.
- For most jobs, about 400 CFM per ton when cooling is desirable.
- Do not operate above .5" w.c. ESP in heating mode. Operating CFM between .5" and .8" w.c. is tabulated for cooling purposes only.

CONTINUOUS FAN SPEEDS		
MODEL	MAXIMUM CFM	CONTINUOUS FAN SPEED[1]
GMVC950453BX	1400	420
GMVC950704CX	1760	530
GMVC950905CX	2200	660
GMVC950905DX	2200	660
GMVC951155DX	2200	660
GCVC950704CX	1760	530
GCVC950905DX	2200	660
GCVC91155DX	2200	660

[1] Continuous fan speed is 30% of furnace maximum CFM

STANDARD ALTITUDE INSTALLATIONS

GAS	ALTITUDE	KIT	ORIFICE	MANIFOLD PRESSURE		PRESSURE SWITCH CHANGE
				HIGH STAGE	LOW STAGE	
Natural	0-7000 Changeover	None	#43	3.5" W.C.	1.9" W.C.	None
Propane	0-7000	LPM-03B & LPM-05	#55	10.0: W.C.	6.0" W.C.	None

- For installation in Canada, gas furnaces are certified only to 4,500 ft.
- For GCVA installations above 7,000 ft., please refer to your Goodman distributor for required kit(s).

GMVC95/GCVC95/9 WIRING DIAGRAM WITH HONEYWELL VALVE

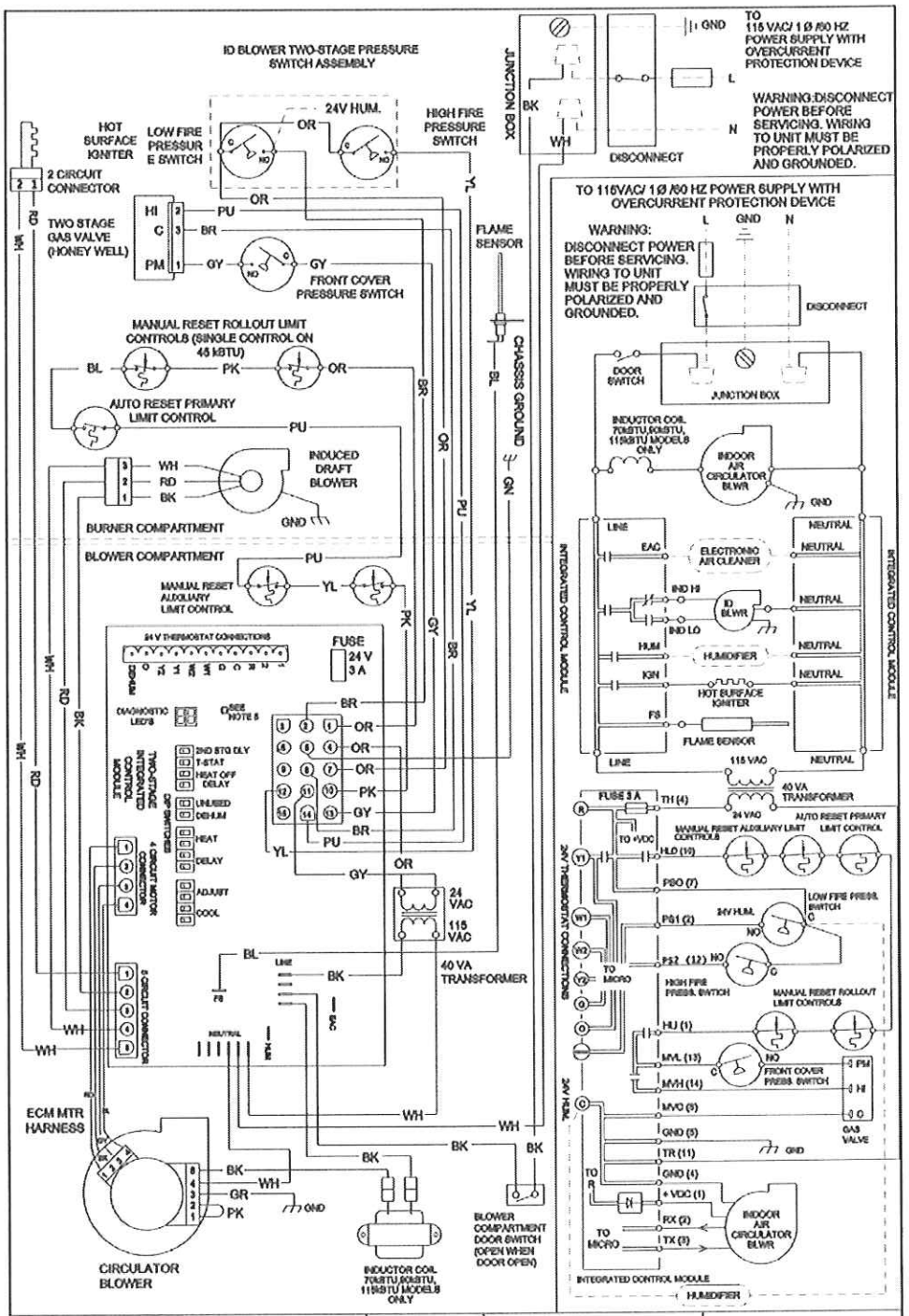

NOTES:

1. SET HEAT ANTICIPATOR ON ROOM THERMOSTAT AT 0.7 AMPS.
2. MANUFACTURER'S SPECIFIED REPLACEMENT PARTS MUST BE USED WHEN SERVICING.
3. IF ANY OF THE ORIGINAL WIRE AS SUPPLIED WITH THE FURNACE MUST BE REPLACED, IT MUST BE REPLACED WITH WIRING MATERIAL HAVING A TEMPERATURE RATING OF AT LEAST 105° C. USE COPPER CONDUCTORS ONLY.
4. UNIT MUST BE PERMANENTLY GROUNDED AND CONFORM TO N.E.C. AND LOCAL CODES.
5. TO RECALL THE LAST 8 FAULTS, MOST RECENT TO LEAST RECENT, DEPRESS SWITCH FOR MORE THAN 2 SECONDS WHILE IN STANDBY (NO THERMOSTAT INPUTS)

0140F00661 REV. B

COLOR CODES:
PK PINK
BR BROWN
WH WHITE
BL BLUE
GY GRAY
RD RED
YL YELLOW
OR ORANGE
PU PURPLE
GN GREEN
BK BLACK

LOW VOLTAGE (24V)
LOW VOLTAGE FIELD
HI VOLTAGE (115V)
HI VOLTAGE FIELD
JUNCTION
TERMINAL
INTERNAL TO INTEGRATED CONTROL
PLUG CONNECTION

EQUIPMENT GND
FIELD GND
FIELD SPLICE
SWITCH (TEMP.)
IGNITER
SWITCH (PRESS.)
OVERCURRENT PROT. DEVICE

WARNING

High Voltage: Disconnect all power before servicing or installing this unit. Multiple power sources may be present. Failure to do so may cause property damage, personal injury, or death.

Wiring is subject to change. Always refer to the wiring diagram or the unit for the most up-to-date wiring.

GMVC95/GCVC9 WIRING DIAGRAM WITH WHITE-RODGERS VALVE

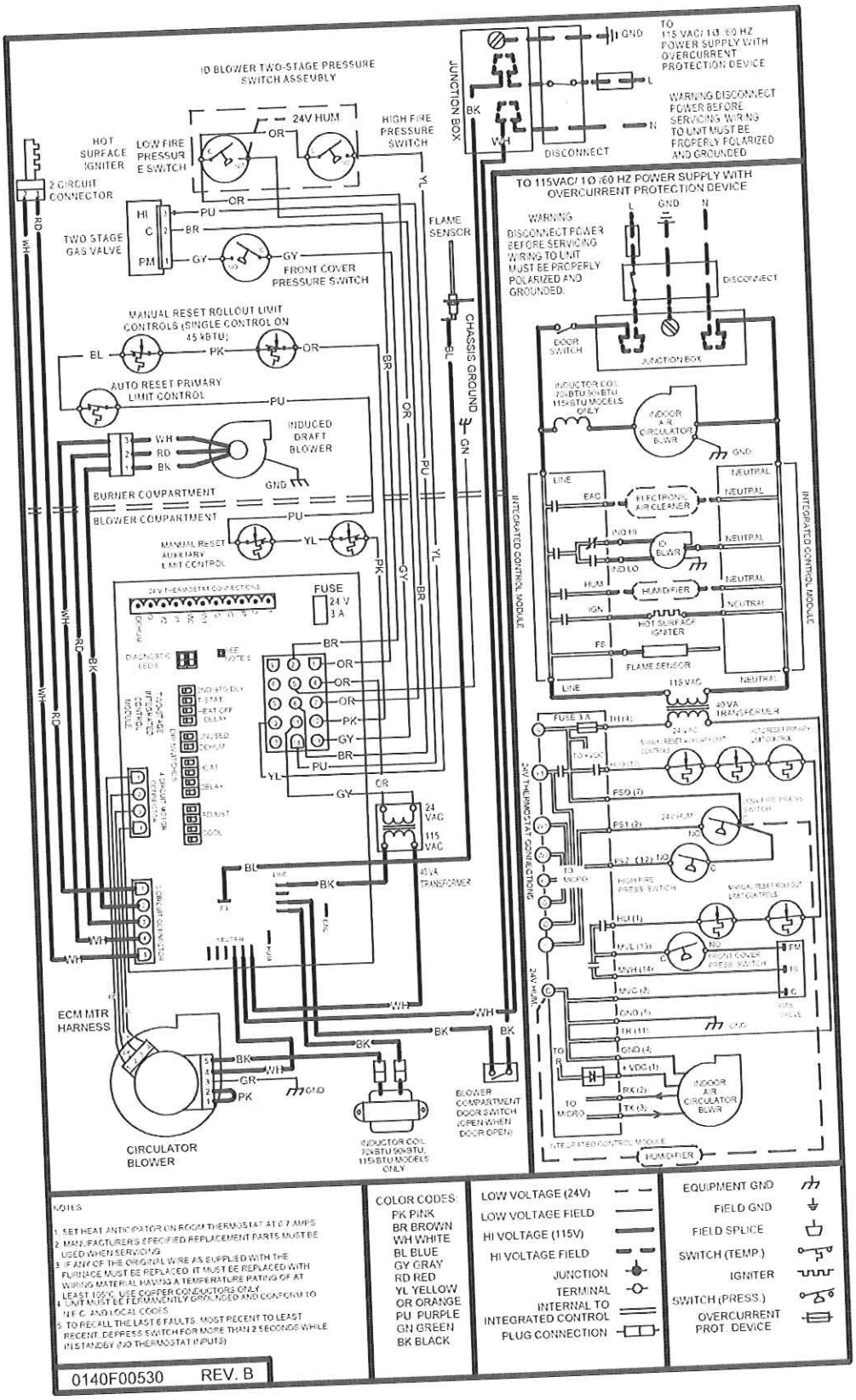

NOTES

1. SET HEAT ANTICIPATOR ON ROOM THERMOSTAT AT 0.7 AMPS
2. MANUFACTURER'S SPECIFIED REPLACEMENT PARTS MUST BE USED WHEN SERVICING
3. IF ANY OF THE ORIGINAL WIRE AS SUPPLIED WITH THE FURNACE MUST BE REPLACED, IT MUST BE REPLACED WITH WIRING MATERIAL HAVING A TEMPERATURE RATING OF AT LEAST 105°C. USE COPPER CONDUCTORS ONLY.
4. UNIT MUST BE PERMANENTLY GROUNDED AND CONFORM TO N.E.C. AND LOCAL CODES.
5. TO RECALL THE LAST 6 FAULTS, MOST RECENT TO LEAST RECENT, DEPRESS SWITCH FOR MORE THAN 2 SECONDS WHILE IN STANDBY (NO THERMOSTAT INPUTS)

0140F00530 REV. B

COLOR CODES:
PK PINK
BR BROWN
WH WHITE
BL BLUE
GY GRAY
RD RED
YL YELLOW
OR ORANGE
PU PURPLE
GN GREEN
BK BLACK

LOW VOLTAGE (24V)
LOW VOLTAGE FIELD
HI VOLTAGE (115V)
HI VOLTAGE FIELD
JUNCTION
TERMINAL
INTERNAL TO INTEGRATED CONTROL
PLUG CONNECTION

EQUIPMENT GND
FIELD GND
FIELD SPLICE
SWITCH (TEMP.)
IGNITER
SWITCH (PRESS.)
OVERCURRENT PROT. DEVICE

WARNING High Voltage: Disconnect all power before servicing or installing this unit. Multiple power sources may be present. Failure to do so may cause property damage, personal injury, or death.

Wiring is subject to change. Always refer to the wiring diagram or the unit for the most up-to-date wiring.

THERMOSTATS

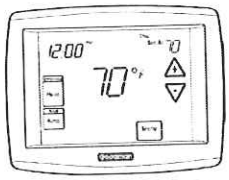

GTS1175-2
GTS3275-2
GTS 4275-2

Touch-Screen Digital Thermostats
(See Amana Thermostat specification sheets for details.)

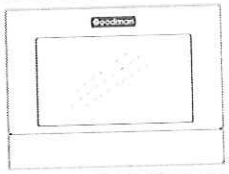

G2111-2
G3272-2
G3273-2

Touch-Screen Digital Thermostats
(See Amana Thermostat specification sheets for details.)

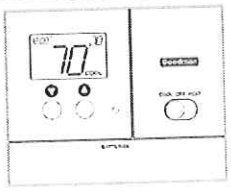

G1100-2
G2100-2
G1152-2
G2152-2

Programmable and Non-programmable Digital Thermostats
(See Amana Thermostat specification sheets for details.)

ACCESSORIES

MODEL	DESCRIPTION	GMVC95 0453BX	GMVC95 0704CX	GMVC95 0905C/DX	GMVC95 1155DX	GCVC95 0704CX	GCVC95 0905DX	GCVC9 1155DX
LPM-05	LP Conversion Kit * (Springs & Orifice)	1	1	1	1	1	1	1
LPM-06	LP Conversion Kit ** (Springs & Orifice)	1	1	1	1	1	1	1
GSAS	Electronic Air Cleaners (-10, -11, -12 or -18)	√	√	√	√	√	√	√
GMU	Media Air Cleaners (1620, 2020, 1625 or 2025)	√	√	√	√	√	√	√
DEHUM1	Dehumidistat	√	√	√	√	√	√	√
HAPS28	High-Altitude Pressure Switch Kit	2	2					
HAPS29	High-Altitude Pressure Switch Kit				2			
HAPS 31	High-Altitude Pressure Switch Kit							2
HALP11	High-Altitude Propane Gas Kit	2	2		2			
HALP 13	High-Altitude Propane Gas Kit							2
HANG 13	High-Altitude Natural Gas Kit	3	3		3			
HANG 14	High-Altitude Natural Gas Kit	4	4		4			
HANG 16	High-Altitude Natural Gas Kit							2
EFR01	External Filter Rack	√	√	√	√	√	√	√
DCVK-20	Horizontal/Vertical Concentric Vent Kit (2")	√	√	√		√		
DCVK-30	Horizontal/Vertical Concentric Vent Kit (3")	√	√	√	√	√	√	√
CFB21	Downflow Floor Base					√		
CFB24	Downflow Floor Base						√	√
017K00000S	Flush-mount vent kit	√	√	√	√	√	√	√

* White-Rodgers gas valve
** Honeywell or White-Rodgers gas valve
1 All Models up to 7,000'
2 7,001' to 11,000'
3 7,001' to 9,000'
4 9,001' to 11,000'

Note: All installations above 7,000' require a pressure switch change. For installation in Canada, gas furnaces are certified only to 4,500'.

EXPANSION VALVE KITS

INSTALLATION INSTRUCTIONS

5151 San Felipe, Suite 500, Houston, TX 77056
www.goodmanmfg.com -or- www.amana-hac.com
P/N: IO-630E Date: September 2010

Attention Installing Personnel

As a professional installer you have an obligation to know the product better than the customer. This includes all safety precautions and related items.

Prior to actual installation, thoroughly familiarize yourself with this Instruction Manual. Pay special attention to all safety warnings. Often during installation or repair it is possible to place yourself in a position which is more hazardous than when the unit is in operation.

Remember, it is your responsibility to install the product safely and to know it well enough to be able to instruct a customer in its safe use.

Safety is a matter of common sense...a matter of thinking before acting. Most dealers have a list of specific good safety practices...follow them.

The precautions listed in this Installation Manual are intended as supplemental to existing practices. However, if there is a direct conflict between existing practices and the content of this manual, the precautions listed here take precedence.

⚠ WARNING

HIGH VOLTAGE !

DISCONNECT ALL POWER BEFORE SERVICING. MULTIPLE POWER SOURCES MAY BE PRESENT. FAILURE TO DO SO MAY CAUSE PROPERTY DAMAGE, PERSONAL INJURY OR DEATH.

Shipping Inspection

Upon receiving the product, inspect it for damage from shipment. Shipping damage, and subsequent investigation is the responsibility of the carrier. Verify the model number, specifications, electrical characteristics, and accessories are correct prior to installation. The distributor or manufacturer will not accept claims from dealers for transportation damage or installation of incorrectly shipped units.

Codes & Regulations

This product is designed and manufactured to comply with national codes. Installation in accordance with such codes and/or prevailing local codes/regulations is the responsibility of the installer. The manufacturer assumes no responsibility for equipment installed in violation of any codes or regulations.

Pre-Installation Instructions

IMPORTANT: Piston must be removed from the Flowrator Distributor Assembly for proper Expansion Valve operation.

Piston Removal:

1. Loosen the 13/16 nut *1 TURN ONLY* to allow high pressure tracer gas to escape. No gas indicates a possible leak.
2. After the gas has escaped, remove the nut and discard the black or brass cap.
3. Remove the check piston and seal and discard.
4. Use a tube cutter to remove the spin closure on the suction line.
5. Remove the tailpiece clamped to the exterior.
6. *For Applications requiring a Field-Installed Access Fitting (see Figure 1 on following page).*
   a. Braze the appropriate equalizer stub to suction line field connection on coil. Slide grommet and insulation back before brazing. Plan fitting position for convenient connection to 1/4" flare nut on equalizer tube.
   b. Braze suction line tubing (line set) to the stub.
   c. Reinstall the suction line grommet and insulation.

   For Applications NOT Requiring a Field-Installed Access Fitting (see Figure 2 on following page).
   a. Braze the suction line field connection on coil. Slide grommet and insulation back before brazing and feed the valve equalizer line through the grommet.
   b. Reinstall the suction line grommet and feed the equalizer line through the opening.

Installation Instructions

1. Connect expansion valve outlet with new seal supplied with kit to flowrator body. Make sure the seal is in place.

   NOTE DIRECTION OF FLOW (Fluid is flowing towards the evaporator coil).
2. <u>Slide the 13/16 nut into position.</u> Braze tailpiece to the liquid tube (line set).
3. <u>AFTER THE TAILPIECE HAS COOLED</u>, position the seal and hand tighten the nut.
4. Torque the 13/16 nut to 10-30 ft/lb. or tighten 1/6 turn.

5. Connect equalizer tube with 1/4 flare nut to suction line fitting on the equalizer stub (as shown in Figure 1) or coil suction manifold (as shown in Figure 2) and torque to 12-14 ft/lb.
6. Secure expansion valve bulb to suction line with banding straps provided at the 10 o'clock or 2 o'clock position. If the suction line is a combination of copper and aluminum tubes, neither the copper strap nor the bulb should be touching any of the aluminum tubes. The copper strap should attach the bulb only to the copper section of the suction tube.

   IMPORTANT: Insulate the bulb and adjacent area.
7. Check for leaks.
8. Enclose expansion valve with the supplied expansion valve blanket.
9. During the superheat adjustment on the TXV, the torque applied on the nut cannot exceed 25 in-lbs

FIGURE 1: Applications Requiring A Field Installed Access Fitting

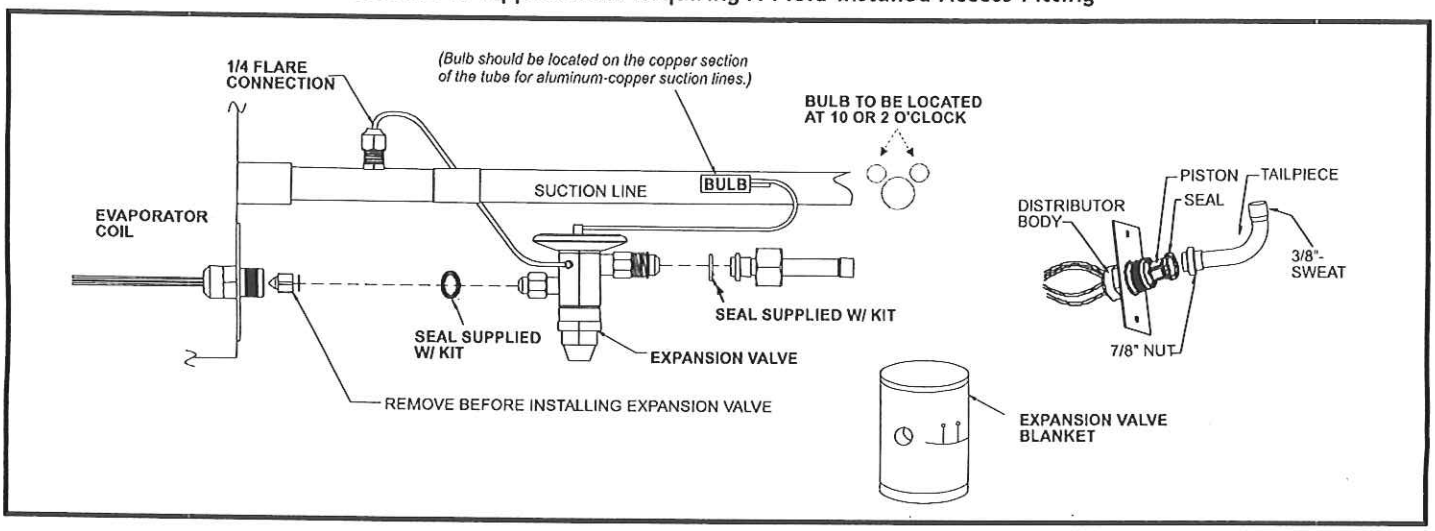

FIGURE 2: Applications NOT Requiring A Field Installed Access Fitting

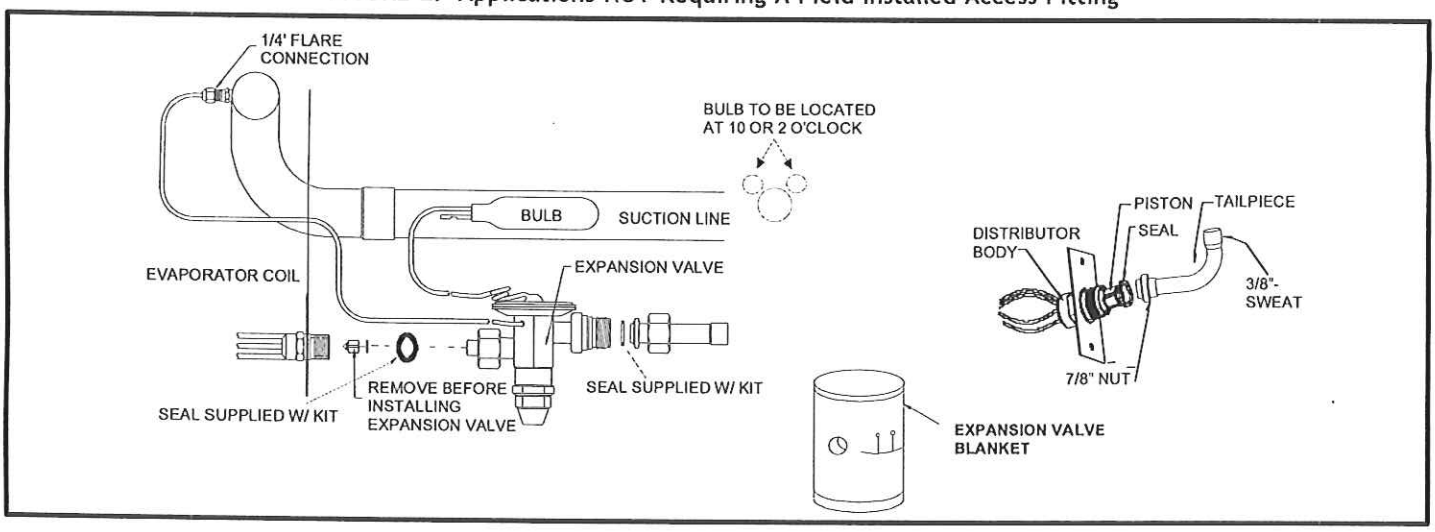

Goodman®
Air Conditioning & Heating

Dual-Refrigerant Coils

CAPF, CAUF, CHPF, & CSCF

Cased, Painted Upflow, Downflow, Uncased Upflow, Downflow, Horizontal "A" & Horizontal Slab Indoor Coils

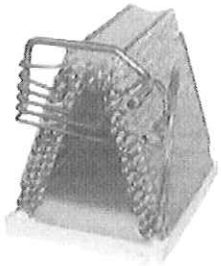

CAUF Uncased

CAPF Cased

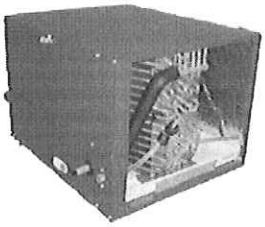

CHPF Horizontal "A"

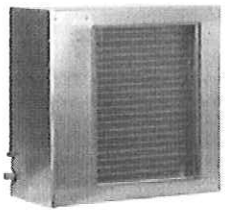

CSCF Horizontal Slab

Standard Features

- Suitable for use with R-410A and R-22 refrigerants
- Rust-resistant, thermoplastic drain pans feature a low water-retention design
- Check flowrater expansion device for heat pump or cooling-only applications
- Rifled aluminum tubing and louvered aluminum fin coils on the CAPF, CAUF, and CHPF coils
- Rifled copper tubing and louvered aluminum fin coils on the CSCF coils
- AHRI Certified; ETL Listed

Cased Coil Cabinet Features

- Foil-face insulation
- Galvanized-steel, leather-grain finish
- Architectural Gray paint finish on CAPF and CHPF cased coils
- Split-seam front for easy access
- 17½", 21", and 24½" CHPF coils have one 3½" adapter plate
- 17½", 21", and 24½" CAPF coils have two 1¾" adapter plates

Note: Do not use these coils on oil furnaces on any applications where the temperature on the drain pan may exceed 300° F. If these coils are applied with an oil furnace or another application where high temperatures threaten or jeopardize the durability of the drain pan, you must replace the factory-installed drain pan with a high-temperature drain pan. High-temperature drain pan kits are available as field-installed accessories.

10 YEAR PARTS LIMITED WARRANTY*

* Complete warranty details available from your local dealer or at www.goodmanmfg.com. To receive the 10-Year Parts Limited Warranty, online registration must be completed within 60 days of installation. Online registration is not required in California or Quebec.

NOMENCLATURE

C	A	U	F	1824	A	6	AA
1	2	3	4	5,6,7,8	9	10	11,12

Product Category
C Indoor Coil

Application
A Upflow/Downflow Coil
H Horizontal A Coil
S Horizontal Slab Coil

Cabinet Finish
U Uncased
P Painted
C Unpainted

Expansion Device
F Flowrator

Engineering
Major/Minor Revisions

Refrigerant
6 R-22 or R-410A
2 R-22
4 R-410A

Nominal Width for Gas Furnace
A Fits 14" Furnace Cabinet
B Fits 17½" Furnace Cabinet
C Fits 21" Furnace Cabinet
D Fits 24½" Furnace Cabinet
N Does Not Apply (horizontal slab coil)

Nominal Capacity Range @ 13 SEER
1824 1½ to 2 Tons
3030 2½ Tons
3642 3 to 3½ Tons

ACCESSORIES

EXPANSION VALVE KITS

KIT NUMBER	DESCRIPTION	APPLICATION	REFRIGERANT	TONNAGE: OUTDOOR UNIT
XVB18-36C	20% Bleed Valve	AC Only	R-22	1½ - 3 Ton
XVB42-60C	20% Bleed Valve	AC Only	R-22	3½ - 5 Ton
XV18-36C	Non-bleed Valve	AC Only	R-22	1½ - 3 Ton
XV42-60C	Non-bleed Valve	AC Only	R-22	3½ - 5 Ton
TX2N2	Non-bleed Valve	AC or HP	R-22	1½ - 2 Ton
TX3N2	Non-bleed Valve	AC or HP	R-22	2½ - 3 Ton
TX5N2	Non-bleed Valve	AC or HP	R-22	3½ - 5 Ton
TX2N4A	Non-bleed Valve	AC or HP	R-410A	1½ - 2 Ton
TX3N4	Non-bleed Valve	AC or HP	R-410A	2½ - 3 Ton
TX5N4	Non-bleed Valve	AC or HP	R-410A	3½ - 5 Ton

Note: Condensing units and heat pumps with reciprocating compressors require the use of start-assist components when used in conjunction with an indoor coil using a non-bleed thermal expansion valve refrigerant metering device.

HIGH-TEMP DRAIN PAN KITS

DRAIN PAN KITS	FURNACE SIZE
HTP-A	14" furnaces
HTP-B	17½" furnaces
HTP-C	21" furnaces
HTP-D	24½" furnaces

CAUF — UNCASED UPFLOW/DOWNFLOW INDOOR COILS

SPECIFICATIONS

MODEL	DIMENSIONS			NOMINAL TONS	CONNECTION		SHIP WEIGHT (LBS)
	W	H	A		LIQUID	SUCTION	
CAUF1824A6	13"	16¼"	13"	1½-2	⅜"	¾"	17
CAUF1824B6	16½"	16⅛"	13"	1½-2	⅜"	¾"	20
CAUF1824C6	20"	16⅜"	17"	1½-2	⅜"	¾"	24
CAUF3030A6	13"	20 1/16"	17"	2½	⅜"	¾"	20
CAUF3030B6	16½"	18¾"	17"	2½	⅜"	¾"	23
CAUF3030C6	20"	17⅞"	17"	2½	⅜"	¾"	27
CAUF3030D6	23"	17⅞"	17"	2½	⅜"	¾"	30
CAUF3131B6	16½"	20 1/16"	17"	2½	⅜"	¾"	25
CAUF3131C6	20"	20"	17"	2½	⅜"	⅞"	28
CAUF3636A6	13"	19½"	17	3	⅜"	⅞"	23
CAUF3636B6	16½"	19⅜"	17	3	⅜"	⅞"	29
CAUF3636C6	20"	19⅛"	17	3	⅜"	⅞"	33
CAUF3636D6	23"	19⅛"	17	3	⅜"	⅞"	36
CAUF3642C6	20"	19"	17	3-3½	⅜"	⅞"	28
CAUF3642D6	23"	19⅞"	17	3-3½	⅜"	⅞"	29
CAUF3743C6	20"	28 1/16"	25"	3-3½	⅜"	⅞"	40
CAUF3743D6	23"	27⅜"	25"	3-3½	⅜"	⅞"	42
CAUF4860C6	20"	28"	25"	4-5	⅜"	⅞"	41
CAUF4860D6	23"	28"	25"	4-5	⅜"	⅞"	44
CAUF4961C6	20"	28"	25"	4-5	⅜"	⅞"	46
CAUF4961D6	23"	27"	25"	4-5	⅜"	⅞"	50

Note: For a properly matched system, refer to specification sheet of the corresponding Goodman outdoor unit.

DIMENSIONS

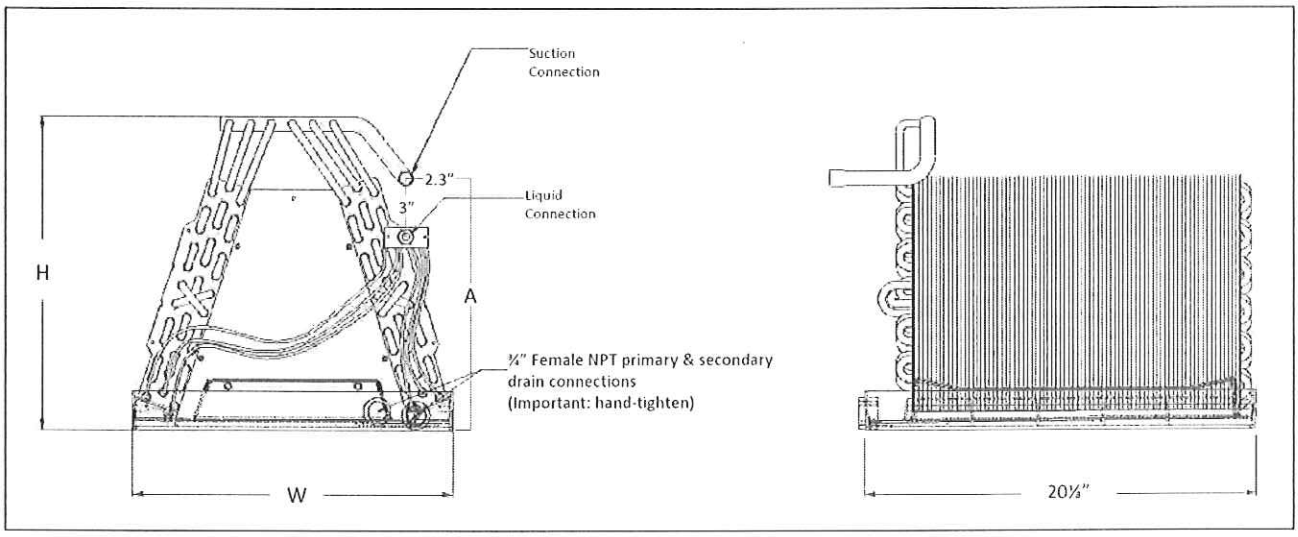

CAPF — CASED UPFLOW/DOWNFLOW INDOOR COILS

SPECIFICATIONS

MODEL	CABINET DIMENSIONS				PLENUM WIDTH	COIL DIMENSIONS		NOMINAL TONS	CONNECTION		SHIP WEIGHT (LBS)
	W	D	H	h		W	H		LIQUID	SUCTION	
CAPF1824A6	14"	21"	18"	16¼"	13"	16¾"	14"	1½-2	⅜"	¾"	32
CAPF1824B6	17½"	21"	18"	16⅛"	16½"	16¾"	16"	1½-2	⅜"	¾"	37
CAPF1824C6	21"	21"	22"	16⅜"	20"	16¾"	14"	1½-2	⅜"	¾"	41
CAPF3030A6	14"	21"	22"	20 1/16"	13"	16¾"	16"	2½	⅜"	¾"	36
CAPF3030B6	17½"	21"	22"	18¾"	16½"	16¾"	16"	2½	⅜"	¾"	40
CAPF3030C6	21"	21"	22"	17⅞"	20"	16¾"	16"	2½	⅜"	¾"	44
CAPF3030D6	24½"	21"	22"	17⅞"	23½"	16¾"	16"	2½	⅜"	¾"	49
CAPF3131B6	17½"	21"	22"	20 1/16"	16½"	16¾"	18"	2½	⅜"	¾"	42
CAPF3131C6	21"	21"	26"	20"	20"	16¾"	20"	2½	⅜"	⅞"	47
CAPF3636A6	14"	21"	22"	19½"	13"	16¾"	16"	3	⅜"	⅞"	39
CAPF3636B6	17½"	21"	22"	19⅜"	16½"	16¾"	16"	3	⅜"	⅞"	47
CAPF3636C6	21"	21"	22"	19⅛"	20"	16¾"	16"	3	⅜"	⅞"	53
CAPF3636D6	24½"	21"	22"	19⅛"	23½"	16¾"	16"	3	⅜"	⅞"	56
CAPF3642C6	21"	21"	22"	19"	20"	16¾"	18"	3-3½	⅜"	⅞"	54
CAPF3642D6	24½"	21"	22"	19⅞"	23½"	16¾"	18"	3-3½	⅜"	⅞"	57
CAPF3743C6	21"	21"	30"	28 1/16"	20"	16¾"	26"	3-3½	⅜"	⅞"	65
CAPF3743D6	24½"	21"	30"	27⅜"	23½"	16¾"	26"	3-3½	⅜"	⅞"	72
CAPF4860C6	21"	21"	30"	28"	20"	16¾"	26"	4-5	⅜"	⅞"	66
CAPF4860D6	24½"	21"	30"	28"	23½"	16¾"	26"	4-5	⅜"	⅞"	73
CAPF4961C6	21"	21"	30"	28"	20"	16¾"	26"	4-5	⅜"	⅞"	73
CAPF4961D6	24½"	21"	30"	27"	23½"	16¾"	26"	4-5	⅜"	⅞"	81

DIMENSIONS

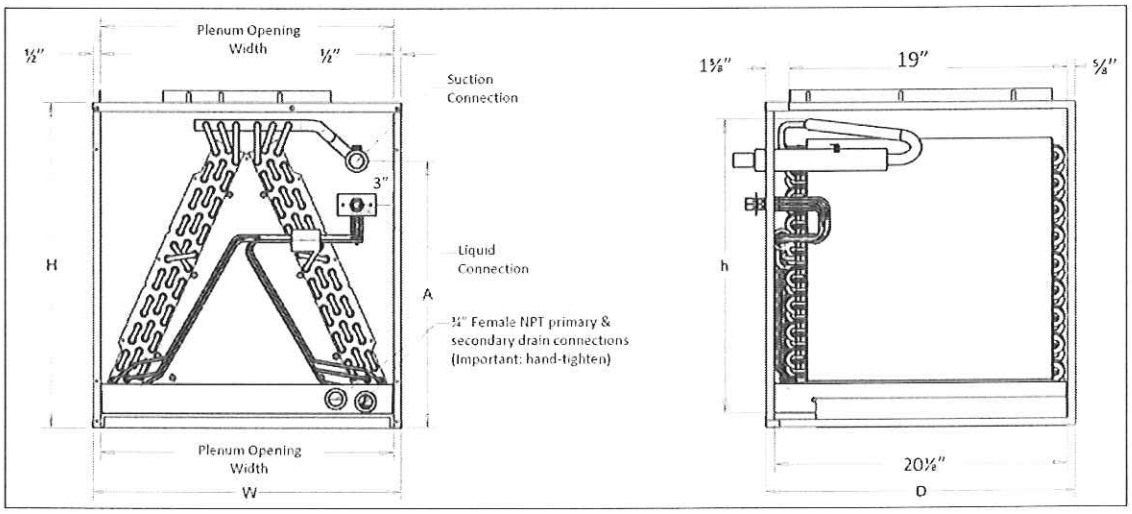

CHPF — CASED HORIZONTAL "A" INDOOR COIL

SPECIFICATIONS

MODEL	CABINET DIMENSIONS			PLENUM		NOMINAL TONS	EVAP COIL FACE AREA*	COIL DIMENSIONS		CONNECTION		SHIP WEIGHT (LBS)
	W	D	H	W	H			W	H	LIQUID	SUCTION	
CHPF1824A6	21⅛"	26"	14"	19"	13"	1½-2	3⅓	20⅛"	12"	⅜"	¾"	36
CHPF2430B6	21⅛"	26"	17½"	19"	16½"	2-2½	4½	20⅛"	16"	⅜"	¾"	55
CHPF3636B6	21⅛"	26"	17½"	19"	16½"	3	4⅓	19½"	16"	⅜"	⅞"	50
CHPF3642C6	21⅛"	26"	21"	19"	20"	3-3½	4⅓	19½"	16"	⅜"	⅞"	63
CHPF3642D6	21⅛"	26"	24½"	19"	23½"	3-3½	6	19½"	22"	⅜"	⅞"	66
CHPF3743C6	21⅛"	26"	21"	19"	20"	3-3½	4⅓	19½"	16"	⅜"	⅞"	63
CHPF3743D6	21⅛"	26"	24½"	19"	23½"	3-3½	6	19½"	22"	⅜"	⅞"	63
CHPF4860D6	21⅛"	26"	24½"	19"	23½"	4-5	6	19½"	22"	⅜"	⅞"	77

* (ft^2)

DIMENSIONS

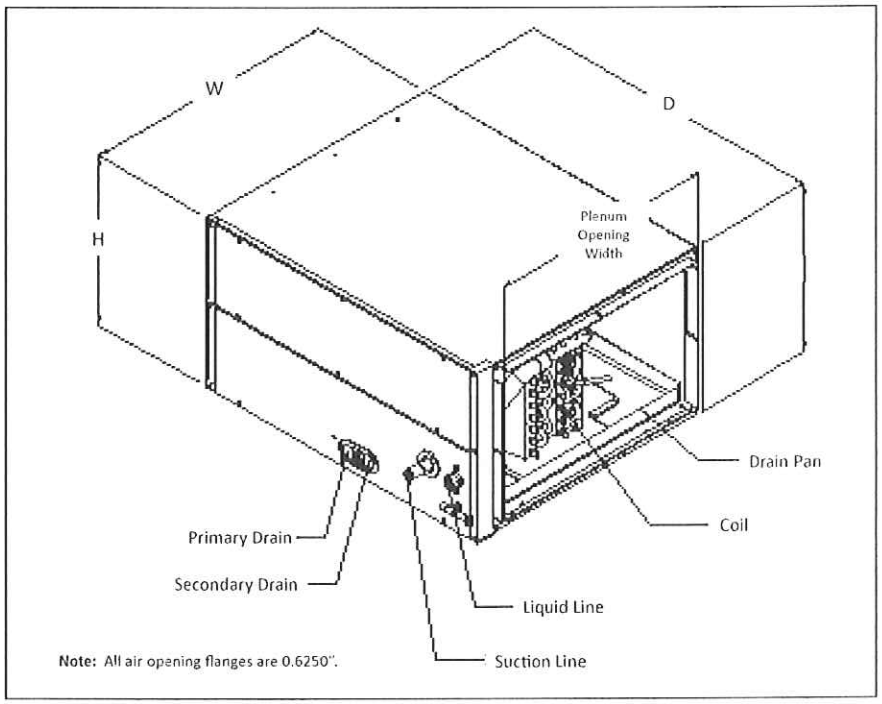

Note: All air opening flanges are 0.6250".

CSCF — HORIZONTAL SLAB EVAPORATOR COILS

SPECIFICATIONS

MODEL	NOMINAL TONS	EVAP COIL FACE AREA*	CONNECTION		SHIP WEIGHT (LBS)
			LIQUID	SUCTION	
CSCF1824N6	1½-2	3⅓	⅜"	¾"	42
CSCF3036N6	2½-3	4⅔	⅜"	¾"	53
CSCF3642N6	3-3½	5⅓	⅜"	⅞"	58
CSCF4860N6	4-5	5⅓	⅜"	⅞"	65

* (ft^2)

DIMENSIONS

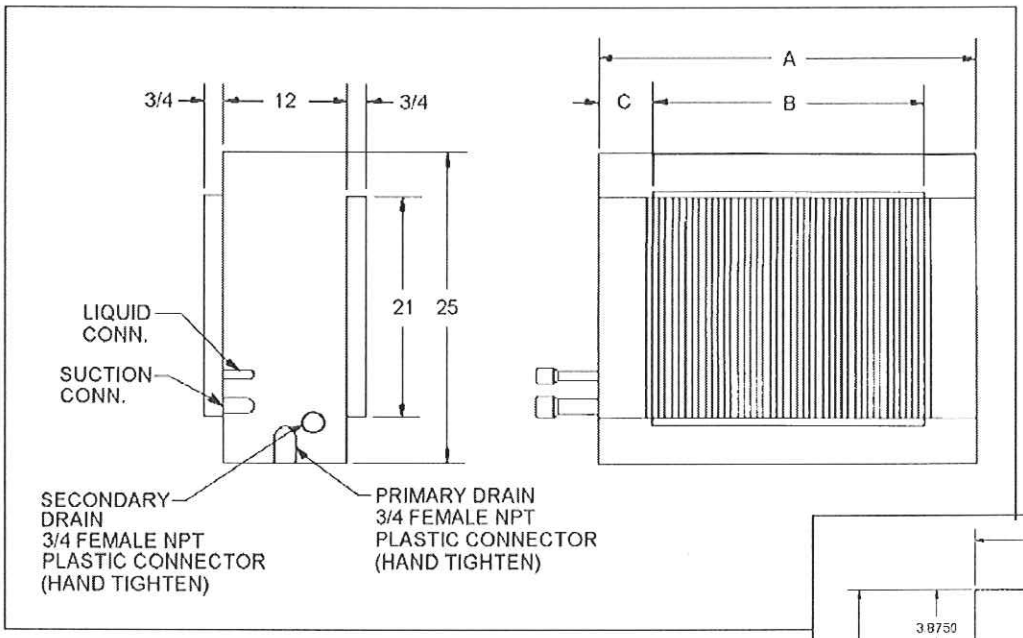

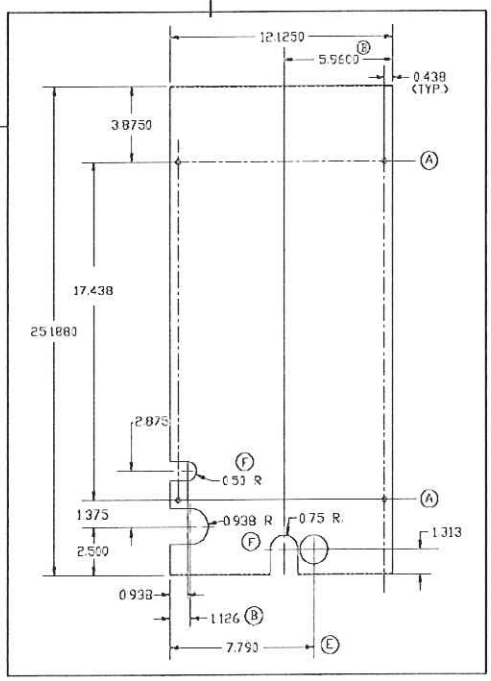

DETAIL OF ACCESS DOOR

MODEL	CABINET DIMENSIONS			PLENUM OPENING		C WIDTH	COIL DIMENSIONS	
	W (A)	D	H	W (B)	H		W	H
CSCF1824N6	25½"	12"	25"	16"	21"	6"	19¾"	24"
CSCF3036N6	33½"	12"	25"	24"	21"	6"	28"	24"
CSCF3642N6	39½"	12"	25"	30"	21"	6"	34"	24"
CSCF4860N6	39½"	12"	25"	30"	21"	6"	34"	24"

AIRFLOW DATA FOR CA*F

AIR QUANTITY (SCFM) VS. PRESSURE DROP (IN. WC)

	SCFM	400	500	600	700	800	900	1000	1100	1200
CA*F1824A6*	Wet	0.071	0.099	0.142	0.183	0.230	0.280	0.331	0.389	---
	Dry	0.062	0.090	0.122	0.154	0.189	0.231	0.278	0.331	0.390
CA*F1824B6*	Wet	0.021	0.032	0.049	0.071	0.089	0.120	0.128	0.159	0.190
	Dry	0.011	0.022	0.029	0.041	0.052	0.069	0.078	0.101	0.120
CA*F1824C6*	Wet	0.017	0.025	0.043	0.061	0.079	0.107	0.114	0.140	0.164
	Dry	0.011	0.017	0.024	0.035	0.044	0.063	0.075	0.094	0.113

	SCFM	600	700	800	900	1000	1100	1200	1300	1400	1500
CA*F3030A6*	Wet	0.151	0.173	0.204	0.238	0.267	0.281	0.326	0.380	0.406	0.451
	Dry	0.069	0.083	0.117	0.132	0.148	0.183	0.206	0.239	0.290	0.338
CA*F3030B6*	Wet	0.090	0.120	0.150	0.180	0.210	0.240	0.280	0.330	0.370	0.420
	Dry	0.080	0.100	0.130	0.150	0.180	0.210	0.250	0.280	0.320	0.360
CA*F3030C6*	Wet	0.071	0.087	0.120	0.134	0.155	0.180	0.209	0.249	0.284	0.328
	Dry	0.050	0.067	0.098	0.113	0.135	0.169	0.189	0.213	0.245	0.275
CA*F3030D6*	Wet	0.069	0.060	0.090	0.108	0.136	0.168	0.206	0.244	0.288	0.337
	Dry	0.029	0.043	0.070	0.082	0.098	0.125	0.141	0.153	0.177	0.200

	SCFM	600	700	800	900	1000	1100	1200	1300	1400	1500	1600
CA*F3131B26*	Wet	0.041	0.049	0.061	0.078	0.090	0.113	0.131	0.140	0.162	0.178	0.210
	Dry	0.021	0.031	0.039	0.048	0.061	0.072	0.079	0.091	0.110	0.122	0.141
CA*F3131C6*	Wet	0.035	0.034	0.038	0.051	0.059	0.073	0.087	0.094	0.110	0.125	0.145
	Dry	0.014	0.022	0.028	0.036	0.045	0.054	0.061	0.068	0.081	0.091	0.108

	SCFM	600	700	800	900	1000	1100	1200	1300	1400	1500	1600	1700	1800	1900	2000	2100	2200
CA*F3636A6*	Wet	0.13	0.17	0.220	0.280	0.310	0.380	0.450	0.530	0.610	0.690	0.790	0.870	0.910	0.950	1.030	1.130	1.190
	Dry	0.13	0.16	0.200	0.230	0.280	0.320	0.380	0.450	0.520	0.590	0.670	0.710	0.790	0.870	0.970	1.060	1.160
CA*F3636B6*	Wet	0.11	0.13	0.160	0.180	0.220	0.260	0.300	0.350	0.400	0.460	0.520	0.570	0.600	0.660	0.720	0.790	0.850
	Dry	0.11	0.13	0.160	0.170	0.210	0.240	0.270	0.330	0.370	0.420	0.470	0.520	0.550	0.610	0.660	0.720	0.770
CA*F3636C6*	Wet	0.1	0.12	0.160	0.170	0.210	0.250	0.290	0.340	0.380	0.430	0.480	0.540	0.550	0.610	0.670	0.720	0.780
	Dry	0.09	0.11	0.130	0.140	0.160	0.180	0.220	0.250	0.280	0.320	0.350	0.370	0.410	0.450	0.490	0.530	0.570
CA*F3636D6*	Wet	0.08	0.11	0.130	0.140	0.170	0.200	0.230	0.270	0.310	0.350	0.390	0.430	0.460	0.500	0.560	0.620	0.660
	Dry	0.09	0.11	0.130	0.140	0.160	0.190	0.220	0.240	0.270	0.300	0.340	0.380	0.410	0.440	0.490	0.530	0.580

	SCFM	600	700	800	900	1000	1100	1200	1300	1400	1500	1600	1700	1800	1900	2000	2100	2200
CA*F3642C6*	Wet	0.07	0.09	0.110	0.120	0.140	0.170	0.200	0.230	0.260	0.290	0.330	0.360	0.380	0.420	0.460	0.500	0.540
	Dry	0.07	0.08	0.100	0.110	0.130	0.150	0.170	0.200	0.230	0.250	0.280	0.310	0.330	0.370	0.400	0.430	0.470
CA*F3642D6*	Wet	0.07	0.09	0.110	0.110	0.140	0.160	0.190	0.210	0.240	0.270	0.300	0.330	0.350	0.380	0.420	0.460	0.480
	Dry	0.06	0.08	0.090	0.100	0.110	0.130	0.150	0.170	0.190	0.220	0.240	0.260	0.280	0.300	0.330	0.360	0.390

	SCFM	800	900	1000	1100	1200	1300	1400	1500	1600	1700	1800	1900	2000	2100	2200
CA*F3743C6*	Wet	0.083	0.093	0.113	0.133	0.143	0.163	0.183	0.213	0.243	0.263	0.293	0.323	0.353	0.383	0.423
	Dry	0.073	0.083	0.103	0.113	0.133	0.153	0.163	0.193	0.213	0.233	0.263	0.293	0.313	0.343	0.373
CA*F3743D6*	Wet	0.074	0.080	0.089	0.107	0.120	0.129	0.138	0.169	0.188	0.209	0.229	0.251	0.273	0.279	0.306
	Dry	0.046	0.056	0.074	0.076	0.086	0.107	0.110	0.126	0.147	0.160	0.176	0.196	0.210	0.230	0.253

	SCFM	1000	1100	1200	1300	1400	1500	1600	1700	1800	1900	2000	2100	2200
CA*F4860C6*	Wet	0.167	0.175	0.191	0.244	0.266	0.299	0.355	0.370	0.413	0.454	0.498	0.586	0.601
	Dry	0.160	0.157	0.194	0.206	0.246	0.264	0.220	0.265	0.290	0.309	0.364	0.389	0.562
CA*F4860D6*	Wet	0.138	0.156	0.177	0.196	0.226	0.247	0.275	0.298	0.327	0.349	0.395	0.460	0.485
	Dry	0.126	0.138	0.157	0.176	0.187	0.200	0.180	0.210	0.230	0.250	0.280	0.300	0.417

	SCFM	1000	1100	1200	1300	1400	1500	1600	1700	1800	1900	2000	2100	2200
CA*F4961C6*	Wet	0.209	0.217	0.233	0.286	0.308	0.341	0.397	0.412	0.455	0.496	0.540	0.628	0.643
	Dry	0.202	0.199	0.236	0.248	0.288	0.306	0.262	0.307	0.332	0.351	0.406	0.431	0.604
CA*F4961D6*	Wet	0.140	0.158	0.179	0.198	0.228	0.249	0.277	0.300	0.329	0.351	0.397	0.462	0.487
	Dry	0.128	0.140	0.159	0.178	0.189	0.202	0.182	0.212	0.232	0.252	0.282	0.302	0.419

AIRFLOW DATA FOR CHPF

AIR QUANTITY (SCFM) VS. PRESSURE DROP (IN. WC)

	SCFM	600	700	800	900	1000	1100	1200	1300	1400
CHPF 1824A6*	Wet	0.132	0.179	0.222	0.272	0.327	0.381	0.456	0.522	0.605
	Dry	0.126	0.165	0.206	0.249	0.302	0.354	0.414	0.478	0.563

	SCFM	600	700	800	900	1000	1100	1200	1300	1400	1500	1600
CHPF 2430B6*	Wet	0.106	0.124	0.152	0.184	0.218	0.258	0.301	0.350	0.406	0.460	0.514
	Dry	0.101	0.122	0.145	0.174	0.209	0.247	0.288	0.333	0.381	0.428	0.484

	SCFM	600	700	800	900	1000	1100	1200	1300	1400	1500	1600
CHPF 3636B6*	Wet	0.107	0.131	0.167	0.199	0.239	0.291	0.338	0.389	0.439	0.494	0.552
	Dry	0.102	0.126	0.152	0.184	0.220	0.259	0.303	0.349	0.401	0.458	0.516

	SCFM	800	900	1000	1100	1200	1300	1400	1500	1600	1700	1800	1900	2000	2100	2200
CHPF 3642C6*	Wet	0.083	0.103	0.126	0.151	0.178	0.208	0.240	0.274	0.310	0.346	0.383	---	---	---	---
	Dry	0.073	0.096	0.120	0.144	0.169	0.196	0.224	0.254	0.286	0.319	0.354	---	---	---	---
CHPF 3642D6*	Wet	0.030	0.040	0.040	0.050	0.060	0.070	0.080	0.080	0.090	0.100	0.110	0.130	0.140	0.150	0.160
	Dry	0.040	0.050	0.060	0.070	0.080	0.080	0.090	0.100	0.110	0.120	0.120	0.120	0.150	0.160	0.180

	SCFM	800	900	1000	1100	1200	1300	1400	1500	1600	1700	1800	1900	2000	2100	2200
CHPF 3743C6*	Wet	0.133	0.153	0.176	0.201	0.228	0.258	0.290	0.324	0.360	0.396	0.433	---	---	---	---
	Dry	0.123	0.146	0.170	0.194	0.219	0.246	0.274	0.304	0.336	0.369	0.404	---	---	---	---
CHPF 3743D6*	Wet	0.101	0.105	0.115	0.125	0.145	0.165	0.185	0.215	0.235	0.265	0.295	0.315	0.355	0.375	0.405
	Dry	0.072	0.095	0.105	0.115	0.135	0.155	0.185	0.205	0.225	0.255	0.275	0.305	0.335	0.365	0.395

	SCFM	900	1000	1100	1200	1300	1400	1500	1600	1700	1800	1900	2000	2100	2200
CHPF 4860D6*	Wet	0.101	0.121	0.131	0.161	0.181	0.201	0.231	0.261	0.291	0.321	0.361	0.391	0.431	0.471
	Dry	0.101	0.121	0.141	0.161	0.181	0.201	0.221	0.251	0.281	0.311	0.341	0.371	0.411	0.441

AIRFLOW DATA FOR CSCF

AIR QUANTITY (SCFM) VS. PRESSURE DROP (IN. WC)

	SCFM	500	600	700	800	900	1000	1100	1200
CSCF 1824N6*	Wet	0.011	0.027	0.049	0.067	0.095	0.121	0.141	0.153
	Dry	0.007	0.016	0.029	0.041	0.056	0.071	0.089	0.108

	SCFM	700	800	900	1000	1100	1200	1300	1400
CSCF 3036N6*	Wet	0.019	0.023	0.030	0.039	0.049	0.052	0.070	0.081
	Dry	0.060	0.013	0.020	0.028	0.036	0.045	0.053	0.063

	SCFM	800	900	1000	1100	1200	1300	1400	1500	1600	1700	1800	1900	2000	2100	2200
CSCF 3642N6*	Wet	0.011	0.016	0.021	0.034	0.044	0.062	0.073	0.096	0.106	0.113	0.123	0.14	0.15	0.21	0.26
	Dry	0.005	0.010	0.016	0.022	0.029	0.035	0.043	0.051	0.062	0.071	0.080	0.1	0.12	0.18	0.24

	SCFM	800	900	1000	1100	1200	1300	1400	1500	1600	1700	1800	1900	2000	2100	2200
CSCF 4860N6*	Wet	0.021	0.033	0.045	0.055	0.067	0.090	0.103	0.125	0.135	0.156	0.188	0.23	0.25	0.28	0.31
	Dry	0.014	0.021	0.030	0.037	0.047	0.055	0.065	0.088	0.095	0.103	0.121	0.18	0.2	0.23	0.25

Goodman
Air Conditioning & Heating

SSX14

1½- to 5-Ton High-Efficiency Split System Air Conditioners

up to 15 SEER

R-410A

Cooling Capacity: 18,000 to 56,800 BTU/h

Standard Features

- R-410A chlorine-free refrigerant
- High-efficiency Copeland® scroll compressor
- High- and low-pressure switches
- High-quality compressor sound blanket
- 850 RPM condenser fan motor
- Factory-installed liquid line filter dryer
- Service valves with sweat connections and gauge ports
- Copper tube/enhanced aluminum fin coil
- Contactor with lug connection
- Ground lug connection
- AHRI Certified; ETL Listed

Cabinet Features

- Goodman® brand sound control top design
- Steel louver coil guard
- Heavy-gauge galvanized-steel cabinet
- Attractive Architectural Gray powder-paint finish with 500-hour salt-spray approval
- Top and side maintenance access
- Single-panel access to controls with space provided for field-installed accessories
- When properly anchored, meets the 2001 Florida Building Code unit integrity requirements for hurricane-type winds (Anchor bracket kits available.)

Contents

LIFETIME COMPRESSOR LIMITED WARRANTY* | 10 YEAR PARTS LIMITED WARRANTY | R-410A REFRIGERANT

* Complete warranty details available from your local dealer or at www.goodmanmfg.com. To receive the Lifetime Compressor Limited Warranty (good for as long as you own your home) and 10-Year Parts Limited Warranty, online registration must be completed within 60 days of installation. Online registration is not required in California or Quebec.

NOMENCLATURE

S	S	X	14	036	1	A	A
1	2	3	4,5	6,7,8	9	10	11

Brand
- G Goodman® (Standard Feature Set Models)
- S Goodman® (High Feature Set Models)

Product Category
- S Split System

Unit Type
- C Condenser R-22
- X Condenser R-410A
- H Heat Pump R-22
- Z Heat Pump R-410A

Efficiency
- 13 13 SEER
- 14 14 SEER
- 16 16 SEER

Nominal Capacity

018	1½ Tons	048	4 Tons
024	2 Tons	060	5 Tons
030	2½ Tons	090	7½ tons
036	3 Tons	120	10 Tons
042	3½ Tons		

Electrical
- 1 208/230 V, 1 Phase, 60 Hz
- 2 220/240 V, 1 Phase, 50 Hz
- 3 208/230 V, 3 Phase, 60 Hz
- 4 460 V, 3 Phase, 60 Hz
- 5 380/415 V, 3 Phase, 50 Hz

Engineering *
Major Revision

Engineering *
Minor Revision

* Neither used for order entry or inventory management.

Important EnergyStar Notice: Proper sizing and installation of equipment is critical to achieve optimal performance. Split system air conditioners and heat pumps must be matched with appropriate coil components to meet EnergyStar criteria. Ask your contractor for details or visit www.energystar.gov.

SPECIFICATIONS

	SSX14 0181A	SSX14 0181B	SSX14 0241A	SSX14 0241B	SSX14 0301A	SSX14 0301B
Cooling Capacity						
Nominal Cooling (BTU/h)	18,000	18,000	24,000	24,000	28,800	28,800
Decibels	70	71	71	71	72	72
Compressor						
RLA	9.0	9.0	13.4	13.4	12.8	12.8
LRA	48.0	48.0	58.3	58.3	64	64
Condenser Fan Motor						
Horsepower (RPM)	1/12	1/6	1/12	1/12	1/6	1/6
FLA	0.60	1.10	0.60	0.60	1.50	1.10
Refrigeration System						
Refrigerant Line Size[1]						
Liquid Line Size ("O.D.)	⅜"	⅜"	⅜"	⅜"	⅜"	⅜"
Suction Line Size ("O.D.)	¾"	¾"	¾"	¾"	¾"	¾"
Refrigerant Connection Size						
Liquid Valve Size ("O.D.)	⅜"	⅜"	⅜"	⅜"	⅜"	⅜"
Suction Valve Size ("O.D.)	¾"	¾"	¾"	¾"	¾"	¾"
Valve Connection Type	Sweat	Sweat	Sweat	Sweat	Sweat	Sweat
Refrigerant Charge	121	70	126	88	131	93
Shipped with Orifice Size	0.049	0.052	0.057	0.055	0.063	0.065
Electrical Data						
Voltage-Hz / Phase	208/230-60-1		208/230-60-1		208/230-60-1	
Minimum Circuit Ampacity [2]	11.8	12.4	17.4	17.5	17.5	17.1
Max. Overcurrent Protection [3]	20	20	30	30	30	30
Min / Max Volts	197 / 253	197 / 253	197 / 253	197 / 253	197 / 253	197 / 253
Electrical Conduit Size	½" or ¾"	½" or ¾"	½" or ¾"	½" or ¾"	½" or ¾"	½" or ¾"
Ship Weight (lbs)	178	146	178	156	195	172

[1] Tested and rated in accordance with ARI Standard 210/240
[2] Wire size should be determined in accordance with National Electrical Codes; extensive wire runs will require larger wire sizes
[3] Must use time-delay fuses or HACR-type circuit breakers of the same size as noted.

NOTES

- Always check the S&R plate for electrical data on the unit being installed.
- Installer will need to supply ⅞" to 1⅛" adapters for suction line connections.
- Unit is charged with refrigerant for 15' of ⅜" liquid line. System charge must be adjusted per Installation Instructions Final Charge Procedure.
- Installation of these units requires the specified TXV Kit to be installed on the indoor coil. THE SPECIFIED TXV IS DETERMINED BY THE OUTDOOR UNIT NOT THE INDOOR COIL.

SPECIFICATIONS (CONT.)

	SSX14 0361A	SSX14 0361B	SSX14 0421B	SSX14 0421C	SSX14 0481A	SSX14 0481B	SSX14 0601A
Cooling Capacity							
Nominal Cooling (BTU/h)	34,600	34,600	40,000	40,000	45,000	45,000	56,800
Decibels	73	73	73	73	74	74	75
Compressor							
RLA	14.1	14.1	17.9	16.7	19.8	19.9	26.4
LRA	77	77	112.0	79.0	109	109	134
Condenser Fan Motor							
Horsepower (RPM)	¼	1/6	1/6	1/6	¼	¼	¼
FLA	1.60	1.10	1.00	1.10	1.60	1.50	1.60
Refrigeration System							
Refrigerant Line Size[1]							
Liquid Line Size ("O.D.)	⅜"	⅜"	⅜"	⅜"	⅜"	⅜"	⅜"
Suction Line Size ("O.D.)	⅞"	⅞"	1⅛"	1⅛"	1⅛"	1⅛"	1⅛"
Refrigerant Connection Size							
Liquid Valve Size ("O.D.)	⅜"	⅜"	⅜"	⅜"	⅜"	⅜"	⅜"
Suction Valve Size ("O.D.)	⅞"	⅞"	⅞"	⅞"	⅞"	⅞"	⅞"
Valve Connection Type	Sweat	Sweat	Sweat	Sweat	Sweat	Sweat	Sweat
Refrigerant Charge	146	98	167	137	185	147	268
Shipped with Orifice Size	0.067	0.068	0.074	0.070	0.079	0.078	0.088
Electrical Data							
Voltage-Hz / Phase	208/230-60-1		208/230-60-1		208/230-60-1		
Minimum Circuit Ampacity [2]	19.2	18.7	23.4	22.0	26.4	26.4	34.6
Max. Overcurrent Protection [3]	30	30	40	35	40	45	60
Min / Max Volts	197 / 253	197 / 253	197 / 253	197 / 253	197 / 253	197 / 253	197 / 253
Electrical Conduit Size	½" or ¾"	½" or ¾"	½" or ¾"	½" or ¾"	½" or ¾"	½" or ¾"	½" or ¾"
Ship Weight (lbs)	199	172	207	184	242	236	280

[1] Tested and rated in accordance with ARI Standard 210/240
[2] Wire size should be determined in accordance with National Electrical Codes; extensive wire runs will require larger wire sizes
[3] Must use time-delay fuses or HACR-type circuit breakers of the same size as noted.

NOTES

- Always check the S&R plate for electrical data on the unit being installed.
- Installer will need to supply ⅞" to 1⅛" adapters for suction line connections.
- Unit is charged with refrigerant for 15' of ⅜" liquid line. System charge must be adjusted per Installation Instructions Final Charge Procedure.
- Installation of these units requires the specified TXV Kit to be installed on the indoor coil. THE SPECIFIED TXV IS DETERMINED BY THE OUTDOOR UNIT NOT THE INDOOR COIL.

Expanded Cooling Data — SSX140181A* / CA*F3131B6A* + TXV

			Outdoor Ambient Temperature																							
			65ºF				75ºF				85ºF				95ºF				105ºF				115ºF			
			Entering Indoor Wet Bulb Temperature																							
IDB	Airflow		59	63	67	71	59	63	67	71	59	63	67	71	59	63	67	71	59	63	67	71	59	63	67	71
70	676	MBh	17.6	18.3	20.0	-	17.2	17.9	19.6	-	16.8	17.4	19.1	-	16.4	17.0	18.6	-	15.6	16.2	17.7	-	14.4	15.0	16.4	-
		S/T	0.71	0.59	0.41	-	0.74	0.62	0.43	-	0.76	0.63	0.44	-	0.78	0.65	0.45	-	0.81	0.68	0.47	-	0.82	0.68	0.47	-
		ΔT	17	15	11	-	17	15	11	-	17	15	11	-	17	15	11	-	17	15	11	-	16	14	11	-
		kW	1.27	1.30	1.33	-	1.36	1.39	1.43	-	1.44	1.47	1.51	-	1.51	1.54	1.59	-	1.57	1.60	1.65	-	1.62	1.65	1.70	-
		Amps	4.4	4.5	4.6	-	4.7	4.8	5.0	-	5.1	5.2	5.4	-	5.5	5.6	5.8	-	5.8	5.9	6.1	-	6.1	6.3	6.5	-
		Hi PR	226	243	246	-	255	274	278	-	290	312	316	-	330	355	360	-	372	400	405	-	416	448	454	-
		Lo PR	116	120	131	-	119	123	135	-	124	127	139	-	127	131	143	-	129	133	146	-	133	137	149	-
	601	MBh	17.1	17.7	19.4	-	16.7	17.3	19.0	-	16.3	16.9	18.5	-	15.9	16.5	18.1	-	15.1	15.7	17.2	-	14.0	14.5	15.9	-
		S/T	0.68	0.57	0.39	-	0.70	0.59	0.41	-	0.72	0.60	0.42	-	0.74	0.62	0.43	-	0.77	0.65	0.45	-	0.78	0.65	0.45	-
		ΔT	18	15	12	-	18	16	12	-	18	16	12	-	18	16	12	-	18	15	12	-	17	14	11	-
		kW	1.26	1.29	1.32	-	1.35	1.38	1.42	-	1.43	1.46	1.50	-	1.50	1.53	1.57	-	1.55	1.59	1.63	-	1.60	1.64	1.69	-
		Amps	4.3	4.4	4.6	-	4.7	4.8	4.9	-	5.1	5.2	5.4	-	5.4	5.5	5.7	-	5.7	5.9	6.1	-	6.1	6.2	6.4	-
		Hi PR	223	240	244	-	253	272	275	-	287	309	313	-	327	352	357	-	368	396	401	-	412	443	450	-
		Lo PR	115	119	129	-	118	122	133	-	122	126	138	-	126	130	141	-	128	132	144	-	131	135	148	-
	526	MBh	15.8	16.4	17.9	-	15.4	16.0	17.5	-	15.1	15.6	17.1	-	14.7	15.2	16.7	-	14.0	14.5	15.9	-	12.9	13.4	14.7	-
		S/T	0.65	0.55	0.38	-	0.68	0.57	0.39	-	0.70	0.58	0.40	-	0.72	0.60	0.42	-	0.75	0.62	0.43	-	0.75	0.63	0.43	-
		ΔT	18	16	12	-	18	16	12	-	18	16	12	-	18	16	12	-	18	16	12	-	17	15	11	-
		kW	1.25	1.28	1.31	-	1.34	1.37	1.41	-	1.42	1.45	1.49	-	1.49	1.52	1.56	-	1.54	1.57	1.62	-	1.59	1.62	1.67	-
		Amps	4.3	4.4	4.5	-	4.6	4.7	4.9	-	5.0	5.1	5.3	-	5.4	5.5	5.7	-	5.7	5.8	6.0	-	6.0	6.2	6.4	-
		Hi PR	221	238	241	-	250	269	273	-	284	306	310	-	324	348	353	-	364	392	397	-	408	439	445	-
		Lo PR	114	117	128	-	117	121	132	-	121	125	136	-	124	128	140	-	127	131	143	-	130	134	146	-
75	676	MBh	17.9	18.5	20.0	21.5	17.5	18.0	19.5	21.0	17.1	17.6	19.1	20.5	16.7	**17.2**	18.6	20.0	15.9	16.3	17.7	19.0	14.7	15.1	16.4	17.6
		S/T	0.81	0.72	0.55	0.35	0.84	0.75	0.57	0.37	0.86	0.77	0.58	0.37	0.89	**0.79**	0.60	0.39	0.92	0.82	0.62	0.40	0.93	0.83	0.63	0.40
		ΔT	20	18	15	10	20	18	15	10	20	18	15	10	20	**19**	15	10	20	18	15	10	19	17	14	10
		kW	1.27	1.30	1.33	1.37	1.36	1.39	1.43	1.47	1.44	1.47	1.51	1.56	1.51	**1.54**	1.59	1.63	1.57	1.60	1.65	1.70	1.62	1.65	1.70	1.76
		Amps	4.4	4.5	4.6	4.8	4.7	4.8	5.0	5.2	5.1	5.2	5.4	5.6	5.5	**5.6**	5.8	6.0	5.8	5.9	6.1	6.4	6.1	6.3	6.5	6.7
		Hi PR	226	243	246	252	255	274	278	284	290	312	316	323	330	**355**	360	368	372	400	405	414	416	448	454	464
		Lo PR	116	120	131	139	119	123	135	143	124	127	139	148	127	**131**	143	152	129	133	146	155	133	137	149	159
	601	MBh	17.4	17.9	19.4	20.8	17.0	17.5	19.0	20.3	16.6	17.1	18.5	19.9	16.2	**16.7**	18.1	19.4	15.4	15.8	17.2	18.4	14.3	14.7	15.9	17.1
		S/T	0.77	0.69	0.52	0.34	0.80	0.72	0.54	0.35	0.82	0.73	0.56	0.36	0.85	**0.76**	0.57	0.37	0.88	0.79	0.59	0.38	0.89	0.79	0.60	0.39
		ΔT	21	19	16	11	21	19	16	11	21	19	16	11	21	**19**	16	11	21	19	16	11	19	18	15	10
		kW	1.26	1.29	1.32	1.36	1.35	1.38	1.42	1.46	1.43	1.46	1.50	1.55	1.50	**1.53**	1.57	1.62	1.55	1.59	1.63	1.69	1.60	1.64	1.69	1.74
		Amps	4.3	4.4	4.6	4.7	4.7	4.8	4.9	5.1	5.1	5.2	5.4	5.6	5.4	**5.5**	5.7	5.9	5.7	5.9	6.1	6.3	6.1	6.2	6.4	6.7
		Hi PR	223	240	244	249	253	272	275	282	287	309	313	320	327	**352**	357	365	368	396	401	410	412	443	450	459
		Lo PR	115	119	129	138	118	122	133	142	122	126	138	147	126	**130**	141	151	128	132	144	154	131	135	148	157
	526	MBh	16.1	16.5	17.9	19.2	15.7	16.2	17.5	18.8	15.3	15.8	17.1	18.3	15.0	**15.4**	16.7	17.9	14.2	14.6	15.8	17.0	13.2	13.5	14.7	15.7
		S/T	0.74	0.67	0.50	0.32	0.77	0.69	0.52	0.34	0.79	0.71	0.54	0.34	0.82	**0.73**	0.55	0.36	0.85	0.76	0.57	0.37	0.85	0.76	0.58	0.37
		ΔT	21	19	16	11	21	19	16	11	21	20	16	11	21	**20**	16	11	21	19	16	11	20	18	15	10
		kW	1.25	1.28	1.31	1.35	1.34	1.37	1.41	1.45	1.42	1.45	1.49	1.53	1.49	**1.52**	1.56	1.61	1.54	1.57	1.62	1.67	1.59	1.62	1.67	1.73
		Amps	4.3	4.4	4.5	4.7	4.6	4.7	4.9	5.1	5.0	5.1	5.3	5.5	5.4	**5.5**	5.7	5.9	5.7	5.8	6.0	6.3	6.0	6.2	6.4	6.6
		Hi PR	221	238	241	247	250	269	273	279	284	306	310	317	324	**348**	353	361	364	392	397	406	408	439	445	455
		Lo PR	114	117	128	136	117	121	132	140	121	125	136	145	124	**128**	140	149	127	131	143	152	130	134	146	156

IDB: Entering Indoor Dry Bulb Temperature

Shaded area reflects ACCA (TVA) conditions

kW = Total system power

High and low pressures are measured at the liquid and suction service valves.

Amps = outdoor unit amps (comp.+fan)

Expanded Cooling Data — SSX140181A* / CA*F3131B6A* + TXV (cont.)

			Outdoor Ambient Temperature																							
			65ºF				75ºF				85ºF				95ºF				105ºF				115ºF			
			Entering Indoor Wet Bulb Temperature																							
IDB	Airflow		59	63	67	71	59	63	67	71	59	63	67	71	59	63	67	71	59	63	67	71	59	63	67	71
80	676	MBh	18.3	18.7	19.9	21.3	17.8	18.2	19.5	20.8	17.4	17.8	19.0	20.3	17.0	17.4	18.5	19.8	16.1	16.5	17.6	18.8	14.9	15.3	16.3	17.4
		S/T	0.89	0.83	0.68	0.51	0.92	0.86	0.70	0.52	0.94	0.88	0.72	0.54	1.00	0.91	0.74	0.56	1.00	0.95	0.77	0.58	1.00	0.96	0.78	0.58
		ΔT	22	21	18	15	22	21	19	15	22	21	19	15	23	22	19	15	22	21	18	15	20	20	17	14
		kW	1.27	1.30	1.33	1.37	1.36	1.39	1.43	1.47	1.44	1.47	1.51	1.56	1.51	1.54	1.59	1.63	1.57	1.60	1.65	1.70	1.62	1.65	1.70	1.76
		Amps	4.4	4.5	4.6	4.8	4.7	4.8	5.0	5.2	5.1	5.2	5.4	5.6	5.5	5.6	5.8	6.0	5.8	5.9	6.1	6.4	6.1	6.3	6.5	6.7
		Hi PR	226	243	246	252	255	274	278	284	290	312	316	323	330	355	360	368	372	400	405	414	416	448	454	464
		Lo PR	116	120	131	139	119	123	135	143	124	127	139	148	127	131	143	152	129	133	146	155	133	137	149	159
	601	MBh	17.7	18.1	19.4	20.7	17.3	17.7	18.9	20.2	16.9	17.3	18.5	19.7	16.5	16.8	**18.0**	19.2	15.7	16.0	17.1	18.3	14.5	14.8	15.8	16.9
		S/T	0.85	0.79	0.65	0.48	0.88	0.82	0.67	0.50	0.90	0.84	0.69	0.51	0.93	0.87	**0.71**	0.53	0.96	0.90	0.74	0.55	0.97	0.91	0.74	0.55
		ΔT	23	22	19	15	23	22	19	15	23	22	19	15	23	22	**20**	16	23	22	19	15	22	21	18	14
		kW	1.26	1.29	1.32	1.36	1.35	1.38	1.42	1.46	1.43	1.46	1.50	1.55	1.50	1.53	**1.57**	1.62	1.55	1.59	1.63	1.69	1.60	1.64	1.69	1.74
		Amps	4.3	4.4	4.6	4.7	4.7	4.8	4.9	5.1	5.1	5.2	5.4	5.6	5.4	5.5	**5.7**	5.9	5.7	5.9	6.1	6.3	6.1	6.2	6.4	6.7
		Hi PR	223	240	244	249	253	272	275	282	287	309	313	320	327	352	**357**	365	368	396	401	410	412	443	450	459
		Lo PR	115	119	129	138	118	122	133	142	122	126	138	147	126	130	**141**	151	128	132	144	154	131	135	148	157
	526	MBh	16.4	16.7	17.9	19.1	16.0	16.3	17.4	18.6	15.6	15.9	17.0	18.2	15.2	15.6	16.6	17.8	14.5	14.8	15.8	16.9	13.4	13.7	14.6	15.6
		S/T	0.82	0.77	0.62	0.47	0.85	0.79	0.65	0.48	0.87	0.81	0.66	0.49	0.90	0.84	0.68	0.51	0.93	0.87	0.71	0.53	0.94	0.88	0.72	0.53
		ΔT	23	22	19	16	24	23	20	16	24	23	20	16	24	23	20	16	23	23	20	16	22	21	18	15
		kW	1.25	1.28	1.31	1.35	1.34	1.37	1.41	1.45	1.42	1.45	1.49	1.53	1.49	1.52	1.56	1.61	1.54	1.57	1.62	1.67	1.59	1.62	1.67	1.73
		Amps	4.3	4.4	4.5	4.7	4.6	4.7	4.9	5.1	5.0	5.1	5.3	5.5	5.4	5.5	5.7	5.9	5.7	5.8	6.0	6.3	6.0	6.2	6.4	6.6
		Hi PR	221	238	241	247	250	269	273	279	284	306	310	317	324	348	353	361	364	392	397	406	408	439	445	455
		Lo PR	114	117	128	136	117	121	132	140	121	125	136	145	124	128	140	149	127	131	143	152	130	134	146	156
85	676	MBh	18.6	18.9	19.8	21.2	18.1	18.5	19.4	20.7	17.7	18.1	18.9	20.2	17.3	17.6	18.4	19.7	16.4	16.7	17.5	18.7	15.2	15.5	16.2	17.3
		S/T	0.93	0.90	0.81	0.66	0.96	0.93	0.84	0.68	0.99	0.95	0.86	0.70	1.00	0.98	0.89	0.72	1.00	1.00	0.92	0.75	1.00	1.00	0.93	0.75
		ΔT	24	23	22	19	24	23	22	19	24	23	22	19	23	24	22	19	22	23	22	19	21	21	21	18
		kW	1.27	1.30	1.33	1.37	1.36	1.39	1.43	1.47	1.44	1.47	1.51	1.56	1.51	1.54	1.59	1.63	1.57	1.60	1.65	1.70	1.62	1.65	1.70	1.76
		Amps	4.4	4.5	4.6	4.8	4.7	4.8	5.0	5.2	5.1	5.2	5.4	5.6	5.5	5.6	5.8	6.0	5.8	5.9	6.1	6.4	6.1	6.3	6.5	6.7
		Hi PR	226	243	246	252	255	274	278	284	290	312	316	323	330	355	360	368	372	400	405	414	416	448	454	464
		Lo PR	116	120	131	139	119	123	135	143	124	127	139	148	127	131	143	152	129	133	146	155	133	137	149	159
	601	MBh	18.0	18.4	19.3	20.5	17.6	18.0	18.8	20.1	17.2	17.5	18.4	19.6	16.8	17.1	17.9	19.1	15.9	16.2	17.0	18.2	14.8	15.0	15.8	16.8
		S/T	0.89	0.86	0.77	0.63	0.92	0.89	0.80	0.65	0.94	0.91	0.82	0.67	0.97	0.94	0.85	0.69	1.00	0.97	0.88	0.71	1.00	0.98	0.89	0.72
		ΔT	24	24	23	20	25	24	23	20	25	24	23	20	25	25	23	20	24	24	23	20	23	23	21	19
		kW	1.26	1.29	1.32	1.36	1.35	1.38	1.42	1.46	1.43	1.46	1.50	1.55	1.50	1.53	1.57	1.62	1.55	1.59	1.63	1.69	1.60	1.64	1.69	1.74
		Amps	4.3	4.4	4.6	4.7	4.7	4.8	4.9	5.1	5.1	5.2	5.4	5.6	5.4	5.5	5.7	5.9	5.7	5.9	6.1	6.3	6.1	6.2	6.4	6.7
		Hi PR	223	240	244	249	253	272	275	282	287	309	313	320	327	352	357	365	368	396	401	410	412	443	450	459
		Lo PR	115	119	129	138	118	122	133	142	122	126	138	147	126	130	141	151	128	132	144	154	131	135	148	157
	526	MBh	16.6	17.0	17.8	19.0	16.3	16.6	17.4	18.5	15.9	16.2	16.9	18.1	15.5	15.8	16.5	17.6	14.7	15.0	15.7	16.8	13.6	13.9	14.5	15.5
		S/T	0.86	0.83	0.75	0.60	0.89	0.86	0.77	0.63	0.91	0.88	0.79	0.64	0.94	0.91	0.82	0.66	0.97	0.94	0.85	0.69	0.98	0.95	0.86	0.69
		ΔT	25	24	23	20	25	25	23	20	25	25	23	20	25	25	24	20	25	25	23	20	23	23	22	19
		kW	1.25	1.28	1.31	1.35	1.34	1.37	1.41	1.45	1.42	1.45	1.49	1.53	1.49	1.52	1.56	1.61	1.54	1.57	1.62	1.67	1.59	1.62	1.67	1.73
		Amps	4.3	4.4	4.5	4.7	4.6	4.7	4.9	5.1	5.0	5.1	5.3	5.5	5.4	5.5	5.7	5.9	5.7	5.8	6.0	6.3	6.0	6.2	6.4	6.6
		Hi PR	221	238	241	247	250	269	273	279	284	306	310	317	324	348	353	361	364	392	397	406	408	439	445	455
		Lo PR	114	117	128	136	117	121	132	140	121	125	136	145	124	128	140	149	127	131	143	152	130	134	146	156

IDB: Entering Indoor Dry Bulb Temperature

Shaded area reflects AHRI (TVA) conditions

kW = Total system power

High and low pressures are measured at the liquid and suction service valves.

Amps = outdoor unit amps (comp.+fan)

Expanded Cooling Data — SSX140181BA / CA*F3636*6C*

			Outdoor Ambient Temperature																							
			65ºF				75ºF				85ºF				95ºF				105ºF				115ºF			
			Entering Indoor Wet Bulb Temperature																							
IDB	Airflow		59	63	67	71	59	63	67	71	59	63	67	71	59	63	67	71	59	63	67	71	59	63	67	71
70	525	MBh	16.7	17.3	18.9	-	16.3	16.9	18.5	-	15.9	16.5	18.1	-	15.5	16.1	17.6	-	14.7	15.3	16.7	-	13.7	14.2	15.5	-
		S/T	0.67	0.56	0.38	-	0.69	0.58	0.40	-	0.71	0.59	0.41	-	0.73	0.61	0.42	-	0.76	0.63	0.44	-	0.76	0.64	0.44	-
		ΔT	19	17	13	-	20	17	13	-	20	17	13	-	20	17	13	-	20	17	13	-	18	16	12	-
		kW	2.00	2.03	2.08	-	2.11	2.14	2.19	-	2.20	2.24	2.29	-	2.29	2.33	2.38	-	2.36	2.40	2.46	-	2.42	2.46	2.53	-
		Amps	4.5	4.6	4.7	-	4.8	4.9	5.1	-	5.2	5.3	5.5	-	5.5	5.7	5.8	-	5.9	6.0	6.2	-	6.2	6.3	6.5	-
		Hi PR	208	224	237	-	234	252	266	-	266	286	302	-	303	326	344	-	341	367	387	-	377	405	428	-
		Lo PR	104	111	121	-	110	117	128	-	115	122	133	-	120	128	140	-	126	134	146	-	130	139	151	-
	600	MBh	18.1	18.7	20.5	-	17.7	18.3	20.0	-	17.2	17.9	19.6	-	16.8	17.4	19.1	-	16.0	16.6	18.1	-	14.8	15.3	16.8	-
		S/T	0.69	0.58	0.40	-	0.71	0.60	0.41	-	0.73	0.61	0.42	-	0.76	0.63	0.44	-	0.79	0.66	0.45	-	0.79	0.66	0.46	-
		ΔT	19	17	13	-	19	17	13	-	19	17	13	-	19	17	13	-	19	17	13	-	18	16	12	-
		kW	2.03	2.07	2.11	-	2.15	2.18	2.23	-	2.25	2.28	2.34	-	2.33	2.37	2.43	-	2.41	2.45	2.51	-	2.47	2.51	2.58	-
		Amps	4.6	4.7	4.8	-	4.9	5.0	5.2	-	5.3	5.4	5.6	-	5.7	5.8	6.0	-	6.0	6.2	6.4	-	6.4	6.5	6.7	-
		Hi PR	215	231	244	-	241	260	274	-	274	295	312	-	312	336	355	-	351	378	399	-	388	418	441	-
		Lo PR	108	114	125	-	114	121	132	-	118	126	137	-	124	132	144	-	130	138	151	-	134	143	156	-
	675	MBh	18.6	19.3	21.1	-	18.2	18.8	20.7	-	17.8	18.4	20.2	-	17.3	18.0	19.7	-	16.5	17.1	18.7	-	15.2	15.8	17.3	-
		S/T	0.72	0.60	0.42	-	0.75	0.63	0.43	-	0.77	0.64	0.44	-	0.79	0.66	0.46	-	0.82	0.69	0.48	-	0.83	0.69	0.48	-
		ΔT	18	16	12	-	19	16	12	-	19	16	12	-	19	16	12	-	18	16	12	-	17	15	11	-
		kW	2.05	2.08	2.12	-	2.16	2.19	2.25	-	2.26	2.30	2.35	-	2.35	2.39	2.45	-	2.42	2.46	2.53	-	2.49	2.53	2.59	-
		Amps	4.6	4.7	4.9	-	5.0	5.1	5.2	-	5.4	5.5	5.7	-	5.7	5.9	6.0	-	6.1	6.2	6.4	-	6.4	6.6	6.8	-
		Hi PR	217	234	247	-	244	262	277	-	277	298	315	-	315	340	359	-	355	382	403	-	392	422	446	-
		Lo PR	109	116	126	-	115	122	133	-	119	127	139	-	125	133	146	-	131	140	152	-	136	144	158	-
75	525	MBh	17.0	17.5	18.9	20.3	16.6	17.1	18.5	19.8	16.2	16.7	18.0	19.4	15.8	**16.3**	17.6	18.9	15.0	15.4	16.7	17.9	13.9	14.3	15.5	16.6
		S/T	0.76	0.68	0.51	0.33	0.78	0.70	0.53	0.34	0.80	0.72	0.54	0.35	0.83	**0.74**	0.56	0.36	0.86	0.77	0.58	0.37	0.87	0.78	0.59	0.38
		ΔT	22	21	17	12	23	21	17	12	23	21	17	12	23	**21**	17	12	23	21	17	12	21	19	16	11
		kW	2.01	2.04	2.09	2.14	2.12	2.15	2.20	2.26	2.22	2.25	2.31	2.37	2.30	**2.34**	2.40	2.46	2.38	2.42	2.48	2.54	2.44	2.48	2.54	2.61
		Amps	4.5	4.6	4.7	4.9	4.8	4.9	5.1	5.3	5.2	5.4	5.5	5.7	5.6	**5.7**	5.9	6.1	5.9	6.1	6.2	6.5	6.3	6.4	6.6	6.8
		Hi PR	211	227	239	250	236	254	269	280	269	289	305	319	306	**329**	348	363	344	371	391	408	380	409	432	451
		Lo PR	105	112	122	130	111	118	129	138	116	123	134	143	122	**129**	141	150	127	136	148	158	132	140	153	163
	600	MBh	18.4	18.9	20.5	22.0	18.0	18.5	20.0	21.5	17.5	18.0	19.5	21.0	17.1	**17.6**	19.1	20.5	16.2	16.7	18.1	19.4	15.0	15.5	16.8	18.0
		S/T	0.78	0.70	0.53	0.34	0.81	0.73	0.55	0.35	0.83	0.75	0.56	0.36	0.86	**0.77**	0.58	0.37	0.89	0.80	0.60	0.39	0.90	0.81	0.61	0.39
		ΔT	22	20	17	12	22	21	17	12	22	21	17	12	23	**21**	17	12	22	20	17	12	21	19	16	11
		kW	2.05	2.08	2.12	2.17	2.16	2.19	2.25	2.30	2.26	2.30	2.35	2.41	2.35	**2.39**	2.45	2.51	2.42	2.46	2.53	2.59	2.49	2.53	2.60	2.66
		Amps	4.6	4.7	4.9	5.0	5.0	5.1	5.2	5.4	5.4	5.5	5.7	5.9	5.7	**5.9**	6.0	6.3	6.1	6.2	6.4	6.7	6.4	6.6	6.8	7.0
		Hi PR	217	234	247	257	244	262	277	289	277	298	315	328	316	**340**	359	374	355	382	403	421	392	422	446	465
		Lo PR	109	116	126	134	115	122	133	142	119	127	139	148	125	**133**	146	155	131	140	153	162	136	145	158	168
	675	MBh	18.9	19.5	21.1	22.6	18.5	19.0	20.6	22.1	18.1	18.6	20.1	21.6	17.6	**18.1**	19.6	21.1	16.7	17.2	18.6	20.0	15.5	16.0	17.3	18.5
		S/T	0.82	0.74	0.56	0.36	0.85	0.76	0.58	0.37	0.87	0.78	0.59	0.38	0.90	**0.81**	0.61	0.39	0.94	0.84	0.63	0.41	0.94	0.84	0.64	0.41
		ΔT	21	20	16	11	21	20	16	11	21	20	16	11	22	**20**	16	11	21	20	16	11	20	18	15	10
		kW	2.06	2.09	2.14	2.19	2.17	2.21	2.26	2.31	2.27	2.31	2.37	2.43	2.36	**2.40**	2.46	2.53	2.44	2.48	2.54	2.61	2.50	2.55	2.61	2.68
		Amps	4.7	4.8	4.9	5.1	5.0	5.1	5.3	5.5	5.4	5.5	5.7	5.9	5.8	**5.9**	6.1	6.3	6.1	6.3	6.5	6.7	6.5	6.6	6.8	7.1
		Hi PR	219	236	249	260	246	265	280	292	280	301	318	332	319	**343**	362	378	359	386	407	425	396	426	450	470
		Lo PR	110	117	127	136	116	123	135	143	120	128	140	149	127	**135**	147	157	133	141	154	164	137	146	159	170

IDB: Entering Indoor Dry Bulb Temperature

High and low pressures are measured at the liquid and suction service valves.

Shaded area reflects ACCA (TVA) conditions

kW = Total system power

Amps = outdoor unit amps (comp.+fan)

Expanded Cooling Data — SSX140181BA / CA*F3636*6C* (cont.)

			Outdoor Ambient Temperature																							
			65ºF				75ºF				85ºF				95ºF				105ºF				115ºF			
			Entering Indoor Wet Bulb Temperature																							
IDB	Airflow		59	63	67	71	59	63	67	71	59	63	67	71	59	63	67	71	59	63	67	71	59	63	67	71
80	525	MBh	17.3	17.6	18.9	20.2	16.9	17.2	18.4	19.7	16.5	16.8	18.0	19.2	16.1	16.4	17.5	18.7	15.3	15.6	16.7	17.8	14.1	14.4	15.4	16.5
		S/T	0.83	0.78	0.63	0.47	0.86	0.81	0.66	0.49	0.88	0.83	0.67	0.50	0.91	0.85	0.69	0.52	0.94	0.89	0.72	0.54	0.95	0.89	0.73	0.54
		ΔT	25	24	21	17	25	24	21	17	25	24	21	17	26	25	21	17	25	24	21	17	24	23	20	16
		kW	2.02	2.05	2.10	2.15	2.13	2.17	2.22	2.27	2.23	2.27	2.32	2.38	2.32	2.36	2.41	2.48	2.39	2.43	2.49	2.56	2.45	2.50	2.56	2.63
		Amps	4.5	4.6	4.8	4.9	4.9	5.0	5.1	5.3	5.3	5.4	5.6	5.8	5.6	5.8	5.9	6.2	6.0	6.1	6.3	6.5	6.3	6.5	6.7	6.9
		Hi PR	213	229	242	252	239	257	271	283	271	292	308	322	309	333	351	366	348	374	395	412	384	414	437	455
		Lo PR	106	113	124	132	112	120	131	139	117	124	136	145	123	131	143	152	129	137	149	159	133	142	155	165
	600	MBh	18.7	19.1	20.4	21.8	18.3	18.7	20.0	21.3	17.8	18.2	19.5	20.8	17.4	17.8	**19.0**	20.3	16.5	16.9	18.1	19.3	15.3	15.6	16.7	17.9
		S/T	0.86	0.81	0.66	0.49	0.89	0.84	0.68	0.51	0.91	0.86	0.70	0.52	0.94	0.88	**0.72**	0.54	0.98	0.92	0.75	0.56	0.99	0.93	0.75	0.56
		ΔT	25	24	21	16	25	24	21	17	25	24	21	17	25	24	**21**	17	25	24	21	17	23	22	19	15
		kW	2.06	2.09	2.14	2.19	2.17	2.21	2.26	2.31	2.27	2.31	2.37	2.43	2.36	2.40	**2.46**	2.53	2.44	2.48	2.54	2.61	2.50	2.55	2.61	2.68
		Amps	4.7	4.8	4.9	5.1	5.0	5.1	5.3	5.5	5.4	5.5	5.7	5.9	5.8	5.9	**6.1**	6.3	6.1	6.3	6.5	6.7	6.5	6.6	6.9	7.1
		Hi PR	219	236	249	260	246	265	280	292	280	301	318	332	319	343	**362**	378	359	386	407	425	396	426	450	470
		Lo PR	110	117	127	136	116	123	135	143	120	128	140	149	127	135	**147**	157	133	141	154	164	137	146	159	170
	675	MBh	19.3	19.7	21.0	22.5	18.8	19.2	20.5	22.0	18.4	18.8	20.1	21.4	17.9	18.3	19.6	20.9	17.0	17.4	18.6	19.9	15.8	16.1	17.2	18.4
		S/T	0.90	0.85	0.69	0.51	0.93	0.88	0.71	0.53	0.96	0.90	0.73	0.55	1.00	0.93	0.75	0.56	1.00	0.96	0.78	0.59	1.00	0.97	0.79	0.59
		ΔT	24	23	20	16	24	23	20	16	24	23	20	16	24	23	20	16	23	23	20	16	21	21	19	15
		kW	2.07	2.10	2.15	2.20	2.19	2.22	2.27	2.33	2.29	2.32	2.38	2.44	2.38	2.42	2.48	2.54	2.45	2.50	2.56	2.63	2.52	2.56	2.63	2.70
		Amps	4.7	4.8	4.9	5.1	5.1	5.2	5.3	5.5	5.5	5.6	5.8	6.0	5.8	6.0	6.2	6.4	6.2	6.3	6.5	6.8	6.5	6.7	6.9	7.2
		Hi PR	221	238	252	263	249	267	282	295	283	304	321	335	322	346	366	382	362	390	412	429	400	431	455	474
		Lo PR	111	118	129	137	117	125	136	145	122	129	141	151	128	136	148	158	134	143	156	166	139	147	161	171
85	525	MBh	17.6	17.9	18.8	20.0	17.2	17.5	18.3	19.5	16.8	17.1	17.9	19.1	16.3	16.7	17.4	18.6	15.5	15.8	16.6	17.7	14.4	14.7	15.4	16.4
		S/T	0.87	0.84	0.76	0.61	0.90	0.87	0.78	0.64	0.92	0.89	0.80	0.65	0.95	0.92	0.83	0.67	0.99	0.95	0.86	0.70	1.00	0.96	0.87	0.71
		ΔT	27	26	25	22	27	27	25	22	27	27	25	22	27	27	25	22	27	26	25	22	25	25	23	20
		kW	2.03	2.06	2.11	2.16	2.15	2.18	2.23	2.29	2.24	2.28	2.34	2.40	2.33	2.37	2.43	2.49	2.41	2.45	2.51	2.57	2.47	2.51	2.58	2.65
		Amps	4.6	4.7	4.8	5.0	4.9	5.0	5.2	5.4	5.3	5.4	5.6	5.8	5.7	5.8	6.0	6.2	6.0	6.2	6.4	6.6	6.4	6.5	6.7	7.0
		Hi PR	215	231	244	255	241	259	274	286	274	295	312	325	312	336	355	370	351	378	399	416	388	418	441	460
		Lo PR	108	114	125	133	114	121	132	140	118	126	137	146	124	132	144	153	130	138	151	161	134	143	156	166
	600	MBh	19.0	19.4	20.3	21.7	18.6	19.0	19.9	21.2	18.2	18.5	19.4	20.7	17.7	18.1	18.9	20.2	16.8	17.1	18.0	19.2	15.6	15.9	16.6	17.7
		S/T	0.90	0.87	0.79	0.64	0.93	0.90	0.81	0.66	0.96	0.92	0.83	0.68	0.99	0.95	0.86	0.70	1.00	0.99	0.89	0.73	1.00	1.00	0.90	0.73
		ΔT	26	26	24	21	27	26	25	21	27	26	25	21	27	26	25	22	26	26	25	21	24	24	23	20
		kW	2.07	2.10	2.15	2.20	2.19	2.22	2.27	2.33	2.29	2.32	2.38	2.44	2.38	2.42	2.48	2.54	2.45	2.50	2.56	2.63	2.52	2.56	2.63	2.70
		Amps	4.7	4.8	4.9	5.1	5.1	5.2	5.3	5.5	5.5	5.6	5.8	6.0	5.8	6.0	6.2	6.4	6.2	6.3	6.5	6.8	6.5	6.7	6.9	7.2
		Hi PR	221	238	252	263	249	267	282	295	283	304	321	335	322	346	366	382	362	390	412	429	400	431	455	474
		Lo PR	111	118	129	137	117	125	136	145	122	129	141	151	128	136	148	158	134	143	156	166	139	147	161	171
	675	MBh	19.6	20.0	20.9	22.3	19.2	19.5	20.4	21.8	18.7	19.1	20.0	21.3	18.2	18.6	19.5	20.8	17.3	17.7	18.5	19.7	16.1	16.4	17.1	18.3
		S/T	0.95	0.91	0.82	0.67	0.98	0.95	0.85	0.69	1.00	0.97	0.87	0.71	1.00	1.00	0.90	0.73	1.00	1.00	0.94	0.76	1.00	1.00	0.94	0.77
		ΔT	25	25	23	20	26	25	24	21	25	25	24	21	25	25	24	21	24	24	24	20	22	22	22	19
		kW	2.08	2.11	2.16	2.21	2.20	2.23	2.29	2.34	2.30	2.34	2.40	2.46	2.39	2.43	2.49	2.56	2.47	2.51	2.58	2.64	2.54	2.58	2.65	2.72
		Amps	4.7	4.8	5.0	5.2	5.1	5.2	5.4	5.6	5.5	5.6	5.8	6.0	5.9	6.0	6.2	6.4	6.2	6.4	6.6	6.8	6.6	6.8	7.0	7.2
		Hi PR	224	241	254	265	251	270	285	298	285	307	324	338	325	350	369	385	366	394	416	434	404	435	459	479
		Lo PR	112	119	130	138	118	126	137	146	123	131	143	152	129	137	150	160	135	144	157	167	140	149	163	173

IDB: Entering Indoor Dry Bulb Temperature

High and low pressures are measured at the liquid and suction service valves.

Shaded area reflects AHRI (TVA) conditions

kW = Total system power

Amps = outdoor unit amps (comp.+fan)

Expanded Cooling Data — SSX140241A* / CA*F3636B6A* / .057 Orifice

			Outdoor Ambient Temperature																							
			65ºF				75ºF				85ºF				95ºF				105ºF				115ºF			
			Entering Indoor Wet Bulb Temperature																							
IDB	Airflow		59	63	67	71	59	63	67	71	59	63	67	71	59	63	67	71	59	63	67	71	59	63	67	71
70	900	MBh	23.5	24.4	26.7	-	23.0	23.8	26.1	-	22.4	23.2	25.5	-	21.9	22.7	24.8	-	20.8	21.5	23.6	-	19.3	20.0	21.9	-
		S/T	0.73	0.61	0.42	-	0.76	0.63	0.44	-	0.78	0.65	0.45	-	0.80	0.67	0.46	-	0.83	0.70	0.48	-	0.84	0.70	0.49	-
		ΔT	18	15	12	-	18	15	12	-	18	15	12	-	18	16	12	-	18	15	12	-	17	14	11	-
		kW	1.63	1.66	1.71	-	1.75	1.78	1.84	-	1.85	1.89	1.95	-	1.94	1.98	2.04	-	2.02	2.06	2.13	-	2.09	2.13	2.20	-
		Amps	5.7	5.8	6.0	-	6.1	6.3	6.5	-	6.7	6.8	7.1	-	7.1	7.3	7.5	-	7.6	7.8	8.0	-	8.0	8.3	8.5	-
		Hi PR	242	260	264	-	273	294	298	-	311	334	339	-	354	381	386	-	398	428	434	-	446	480	486	-
		Lo PR	119	123	134	-	123	127	138	-	127	131	143	-	130	135	147	-	133	137	150	-	136	141	154	-
	800	MBh	22.8	23.7	25.9	-	22.3	23.1	25.3	-	21.8	22.6	24.7	-	21.2	22.0	24.1	-	20.2	20.9	22.9	-	18.7	19.4	21.2	-
		S/T	0.70	0.58	0.40	-	0.72	0.60	0.42	-	0.74	0.62	0.43	-	0.77	0.64	0.44	-	0.80	0.66	0.46	-	0.80	0.67	0.46	-
		ΔT	18	16	12	-	19	16	12	-	19	16	12	-	19	16	12	-	18	16	12	-	17	15	11	-
		kW	1.62	1.65	1.70	-	1.74	1.77	1.82	-	1.84	1.87	1.93	-	1.93	1.97	2.03	-	2.00	2.05	2.11	-	2.07	2.11	2.18	-
		Amps	5.6	5.7	5.9	-	6.1	6.2	6.4	-	6.6	6.8	7.0	-	7.1	7.2	7.5	-	7.5	7.7	8.0	-	8.0	8.2	8.5	-
		Hi PR	239	257	261	-	271	291	295	-	308	331	336	-	350	377	382	-	394	424	430	-	442	475	482	-
		Lo PR	118	122	133	-	122	126	137	-	126	130	142	-	129	133	146	-	132	136	148	-	135	139	152	-
	700	MBh	21.1	21.8	23.9	-	20.6	21.3	23.4	-	20.1	20.8	22.8	-	19.6	20.3	22.3	-	18.6	19.3	21.1	-	17.3	17.9	19.6	-
		S/T	0.67	0.56	0.39	-	0.70	0.58	0.40	-	0.72	0.60	0.41	-	0.74	0.62	0.43	-	0.77	0.64	0.44	-	0.77	0.65	0.45	-
		ΔT	19	16	12	-	19	16	12	-	19	16	12	-	19	16	12	-	19	16	12	-	18	15	12	-
		kW	1.61	1.64	1.69	-	1.72	1.76	1.81	-	1.82	1.86	1.92	-	1.91	1.95	2.01	-	1.99	2.03	2.09	-	2.05	2.10	2.16	-
		Amps	5.6	5.7	5.9	-	6.0	6.2	6.4	-	6.5	6.7	6.9	-	7.0	7.2	7.4	-	7.5	7.6	7.9	-	7.9	8.1	8.4	-
		Hi PR	237	255	258	-	268	288	292	-	305	328	332	-	347	373	378	-	390	420	426	-	437	470	477	-
		Lo PR	117	121	132	-	120	124	136	-	125	129	140	-	128	132	144	-	130	135	147	-	134	138	151	-
75	900	MBh	23.9	24.6	26.7	28.6	23.4	24.1	26.0	27.9	22.8	23.5	25.4	27.3	22.2	**22.9**	24.8	26.6	21.1	21.8	23.6	25.3	19.6	20.2	21.8	23.4
		S/T	0.83	0.74	0.56	0.36	0.86	0.77	0.58	0.38	0.88	0.79	0.60	0.39	0.91	**0.82**	0.62	0.40	0.95	0.85	0.64	0.41	0.96	0.85	0.65	0.42
		ΔT	20	19	15	11	21	19	16	11	21	19	16	11	21	**19**	16	11	20	19	15	11	19	18	14	10
		kW	1.63	1.66	1.71	1.76	1.75	1.78	1.84	1.89	1.85	1.89	1.95	2.01	1.94	**1.98**	2.04	2.11	2.02	2.06	2.13	2.19	2.09	2.13	2.20	2.27
		Amps	5.7	5.8	6.0	6.2	6.1	6.3	6.5	6.7	6.7	6.8	7.1	7.3	7.1	**7.3**	7.5	7.8	7.6	7.8	8.0	8.4	8.0	8.3	8.5	8.9
		Hi PR	242	260	264	269	273	294	298	305	311	334	339	346	354	**381**	386	394	398	428	434	444	446	480	486	497
		Lo PR	119	123	134	143	123	127	138	147	127	131	143	152	130	**135**	147	157	133	137	150	160	136	141	154	164
	800	MBh	23.2	23.9	25.9	27.8	22.7	23.4	25.3	27.1	22.1	22.8	24.7	26.5	21.6	**22.2**	24.1	25.8	20.5	21.1	22.9	24.5	19.0	19.6	21.2	22.7
		S/T	0.79	0.71	0.54	0.35	0.82	0.74	0.56	0.36	0.84	0.75	0.57	0.37	0.87	**0.78**	0.59	0.38	0.90	0.81	0.61	0.39	0.91	0.82	0.62	0.40
		ΔT	21	20	16	11	21	20	16	11	21	20	16	11	22	**20**	16	11	21	20	16	11	20	18	15	10
		kW	1.62	1.65	1.70	1.75	1.74	1.77	1.82	1.88	1.84	1.87	1.93	1.99	1.93	**1.97**	2.03	2.09	2.00	2.05	2.11	2.18	2.07	2.11	2.18	2.25
		Amps	5.6	5.7	5.9	6.2	6.1	6.2	6.4	6.7	6.6	6.8	7.0	7.3	7.1	**7.2**	7.5	7.8	7.5	7.7	8.0	8.3	8.0	8.2	8.5	8.8
		Hi PR	239	257	261	267	271	291	295	302	308	331	336	343	350	**377**	382	391	394	424	430	439	442	475	482	492
		Lo PR	118	122	133	142	122	126	137	146	126	130	142	151	129	**133**	146	155	132	136	148	158	135	139	152	162
	700	MBh	21.4	22.1	23.9	25.6	20.9	21.6	23.3	25.0	20.4	21.0	22.8	24.4	19.9	**20.5**	22.2	23.8	18.9	19.5	21.1	22.7	17.5	18.1	19.6	21.0
		S/T	0.77	0.68	0.52	0.33	0.79	0.71	0.54	0.35	0.81	0.73	0.55	0.35	0.84	**0.75**	0.57	0.37	0.87	0.78	0.59	0.38	0.88	0.79	0.59	0.38
		ΔT	22	20	16	11	22	20	16	11	22	20	16	11	22	**20**	17	11	22	20	16	11	20	19	15	11
		kW	1.61	1.64	1.69	1.74	1.72	1.76	1.81	1.86	1.82	1.86	1.92	1.98	1.91	**1.95**	2.01	2.07	1.99	2.03	2.09	2.16	2.05	2.10	2.16	2.23
		Amps	5.6	5.7	5.9	6.1	6.0	6.2	6.4	6.6	6.5	6.7	6.9	7.2	7.0	**7.2**	7.4	7.7	7.5	7.6	7.9	8.2	7.9	8.1	8.4	8.7
		Hi PR	237	255	258	264	268	288	292	298	305	328	332	339	347	**373**	378	387	390	420	426	435	437	470	477	487
		Lo PR	117	121	132	140	120	124	136	145	125	129	140	149	128	**132**	144	153	130	135	147	156	134	138	151	160

IDB: Entering Indoor Dry Bulb Temperature

High and low pressures are measured at the liquid and suction service valves.

Shaded area reflects ACCA (TVA) conditions

kW = Total system power

Amps = outdoor unit amps (comp.+fan)

Expanded Cooling Data — SSX140241A* / CA*F3636B6A* / .057 Orifice (cont.)

			Outdoor Ambient Temperature																							
			65ºF				75ºF				85ºF				95ºF				105ºF				115ºF			
			Entering Indoor Wet Bulb Temperature																							
IDB	Airflow		59	63	67	71	59	63	67	71	59	63	67	71	59	63	67	71	59	63	67	71	59	63	67	71
80	900	MBh	24.3	24.9	26.6	28.4	23.8	24.3	26.0	27.7	23.2	23.7	25.3	27.1	22.6	23.1	24.7	26.4	21.5	22.0	23.5	25.1	19.9	20.4	21.8	23.3
		S/T	0.91	0.86	0.70	0.52	0.95	0.89	0.72	0.54	0.97	0.91	0.74	0.55	1.00	0.94	0.76	0.57	1.00	1.00	0.79	0.59	1.00	1.00	0.80	0.60
		ΔT	23	22	19	15	23	22	19	15	23	22	19	15	23	22	19	15	22	22	19	15	20	21	18	14
		kW	1.63	1.66	1.71	1.76	1.75	1.78	1.84	1.89	1.85	1.89	1.95	2.01	1.94	1.98	2.04	2.11	2.02	2.06	2.13	2.19	2.09	2.13	2.20	2.27
		Amps	5.7	5.8	6.0	6.2	6.1	6.3	6.5	6.7	6.7	6.8	7.1	7.3	7.1	7.3	7.5	7.8	7.6	7.8	8.0	8.4	8.0	8.3	8.5	8.9
		Hi PR	242	260	264	269	273	294	298	305	311	334	339	346	354	381	386	394	398	428	434	444	446	480	486	497
		Lo PR	119	123	134	143	123	127	138	147	127	131	143	152	130	135	147	157	133	137	150	160	136	141	154	164
	800	MBh	23.6	24.1	25.8	27.6	23.1	23.6	25.2	26.9	22.5	23.0	24.6	26.3	22.0	22.5	**24.0**	25.7	20.9	21.3	22.8	24.4	19.3	19.8	21.1	22.6
		S/T	0.87	0.82	0.66	0.50	0.90	0.85	0.69	0.51	0.93	0.87	0.71	0.53	0.96	0.90	**0.73**	0.54	0.99	0.93	0.76	0.57	1.00	0.94	0.76	0.57
		ΔT	24	23	20	16	24	23	20	16	24	23	20	16	24	23	**20**	16	24	23	20	16	22	21	19	15
		kW	1.62	1.65	1.70	1.75	1.74	1.77	1.82	1.88	1.84	1.87	1.93	1.99	1.93	1.97	**2.03**	2.09	2.00	2.05	2.11	2.18	2.07	2.11	2.18	2.25
		Amps	5.6	5.7	5.9	6.2	6.1	6.2	6.4	6.7	6.6	6.8	7.0	7.3	7.1	7.2	**7.5**	7.8	7.5	7.7	8.0	8.3	8.0	8.2	8.5	8.8
		Hi PR	239	257	261	267	271	291	295	302	308	331	336	343	350	377	**382**	391	394	424	430	439	442	475	482	492
		Lo PR	118	122	133	142	122	126	137	146	126	130	142	151	129	133	**146**	155	132	136	148	158	135	139	152	162
	700	MBh	21.8	22.3	23.8	25.5	21.3	21.8	23.3	24.9	20.8	21.3	22.7	24.3	20.3	20.7	22.2	23.7	19.3	19.7	21.0	22.5	17.9	18.2	19.5	20.8
		S/T	0.84	0.79	0.64	0.48	0.87	0.82	0.66	0.50	0.89	0.84	0.68	0.51	0.92	0.86	0.70	0.53	0.96	0.90	0.73	0.55	0.96	0.90	0.74	0.55
		ΔT	24	23	20	16	24	23	20	16	24	23	20	16	25	24	20	16	24	23	20	16	23	22	19	15
		kW	1.61	1.64	1.69	1.74	1.72	1.76	1.81	1.86	1.82	1.86	1.92	1.98	1.91	1.95	2.01	2.07	1.99	2.03	2.09	2.16	2.05	2.10	2.16	2.23
		Amps	5.6	5.7	5.9	6.1	6.0	6.2	6.4	6.6	6.5	6.7	6.9	7.2	7.0	7.2	7.4	7.7	7.5	7.6	7.9	8.2	7.9	8.1	8.4	8.7
		Hi PR	237	255	258	264	268	288	292	298	305	328	332	339	347	373	378	387	390	420	426	435	437	470	477	487
		Lo PR	117	121	132	140	120	124	136	145	125	129	140	149	128	132	144	153	130	135	147	156	134	138	151	160
85	900	MBh	24.8	25.2	26.4	28.2	24.2	24.7	25.8	27.6	23.6	24.1	25.2	26.9	23.0	23.5	24.6	26.2	21.9	22.3	23.4	24.9	20.3	20.7	21.6	23.1
		S/T	0.96	0.92	0.83	0.68	0.99	0.96	0.86	0.70	1.00	0.98	0.89	0.72	1.00	1.00	0.91	0.74	1.00	1.00	0.95	0.77	1.00	1.00	0.96	0.78
		ΔT	24	24	23	19	25	24	23	20	24	24	23	20	24	24	23	20	22	23	23	20	21	21	21	18
		kW	1.63	1.66	1.71	1.76	1.75	1.78	1.84	1.89	1.85	1.89	1.95	2.01	1.94	1.98	2.04	2.11	2.02	2.06	2.13	2.19	2.09	2.13	2.20	2.27
		Amps	5.7	5.8	6.0	6.2	6.1	6.3	6.5	6.7	6.7	6.8	7.1	7.3	7.1	7.3	7.5	7.8	7.6	7.8	8.0	8.4	8.0	8.3	8.5	8.9
		Hi PR	242	260	264	269	273	294	298	305	311	334	339	346	354	381	386	394	398	428	434	444	446	480	486	497
		Lo PR	119	123	134	143	123	127	138	147	127	131	143	152	130	135	147	157	133	137	150	160	136	141	154	164
	800	MBh	24.0	24.5	25.7	27.4	23.5	23.9	25.1	26.8	22.9	23.4	24.5	26.1	22.4	22.8	23.9	25.5	21.2	21.7	22.7	24.2	19.7	20.1	21.0	22.4
		S/T	0.91	0.88	0.79	0.64	0.95	0.91	0.82	0.67	0.97	0.94	0.84	0.69	1.00	0.97	0.87	0.71	1.00	1.00	0.90	0.73	1.00	1.00	0.91	0.74
		ΔT	25	25	23	20	26	25	24	21	26	25	24	21	26	25	24	21	24	25	24	20	23	23	22	19
		kW	1.62	1.65	1.70	1.75	1.74	1.77	1.82	1.88	1.84	1.87	1.93	1.99	1.93	1.97	2.03	2.09	2.00	2.05	2.11	2.18	2.07	2.11	2.18	2.25
		Amps	5.6	5.7	5.9	6.2	6.1	6.2	6.4	6.7	6.6	6.8	7.0	7.3	7.1	7.2	7.5	7.8	7.5	7.7	8.0	8.3	8.0	8.2	8.5	8.8
		Hi PR	239	257	261	267	271	291	295	302	308	331	336	343	350	377	382	391	394	424	430	439	442	475	482	492
		Lo PR	118	122	133	142	122	126	137	146	126	130	142	151	129	133	146	155	132	136	148	158	135	139	152	162
	700	MBh	22.2	22.6	23.7	25.3	21.7	22.1	23.1	24.7	21.2	21.6	22.6	24.1	20.6	21.0	22.0	23.5	19.6	20.0	20.9	22.3	18.2	18.5	19.4	20.7
		S/T	0.88	0.85	0.77	0.62	0.91	0.88	0.79	0.64	0.94	0.90	0.81	0.66	0.97	0.93	0.84	0.68	1.00	0.97	0.87	0.71	1.00	0.98	0.88	0.71
		ΔT	26	25	24	21	26	26	24	21	26	26	24	21	26	26	24	21	26	25	24	21	24	24	22	19
		kW	1.61	1.64	1.69	1.74	1.72	1.76	1.81	1.86	1.82	1.86	1.92	1.98	1.91	1.95	2.01	2.07	1.99	2.03	2.09	2.16	2.05	2.10	2.16	2.23
		Amps	5.6	5.7	5.9	6.1	6.0	6.2	6.4	6.6	6.5	6.7	6.9	7.2	7.0	7.2	7.4	7.7	7.5	7.6	7.9	8.2	7.9	8.1	8.4	8.7
		Hi PR	237	255	258	264	268	288	292	298	305	328	332	339	347	373	378	387	390	420	426	435	437	470	477	487
		Lo PR	117	121	132	140	120	124	136	145	125	129	140	149	128	132	144	153	130	135	147	156	134	138	151	160

IDB: Entering Indoor Dry Bulb Temperature

High and low pressures are measured at the liquid and suction service valves.

Shaded area reflects AHRI (TVA) conditions

kW = Total system power

Amps = outdoor unit amps (comp.+fan)

Expanded Cooling Data — SSX140241BA / CA*F3636*6C*

			Outdoor Ambient Temperature																							
			65ºF				75ºF				85ºF				95ºF				105ºF				115ºF			
			Entering Indoor Wet Bulb Temperature																							
IDB	Airflow		59	63	67	71	59	63	67	71	59	63	67	71	59	63	67	71	59	63	67	71	59	63	67	71
70	700	MBh	23.4	24.2	26.5	-	22.8	23.7	25.9	-	22.3	23.1	25.3	-	21.7	22.5	24.7	-	20.7	21.4	23.5	-	19.1	19.8	21.7	-
		S/T	0.65	0.54	0.37	-	0.67	0.56	0.39	-	0.69	0.57	0.40	-	0.71	0.59	0.41	-	0.74	0.61	0.43	-	0.74	0.62	0.43	-
		ΔT	20	17	13	-	20	17	13	-	20	17	13	-	20	18	13	-	20	17	13	-	19	16	12	-
		kW	1.60	1.63	1.68	-	1.72	1.75	1.81	-	1.82	1.86	1.92	-	1.91	1.95	2.02	-	1.99	2.03	2.10	-	2.06	2.10	2.17	-
		Amps	5.8	6.0	6.2	-	6.3	6.5	6.7	-	6.9	7.0	7.3	-	7.3	7.5	7.8	-	7.8	8.0	8.3	-	8.3	8.5	8.8	-
		Hi PR	233	250	264	-	261	281	297	-	297	320	337	-	338	364	384	-	380	409	432	-	420	452	478	-
		Lo PR	105	112	122	-	111	118	129	-	115	123	134	-	121	129	141	-	127	135	147	-	131	140	152	-
	725	MBh	23.6	24.5	26.8	-	23.1	23.9	26.2	-	22.5	23.3	25.6	-	22.0	22.8	24.9	-	20.9	21.6	23.7	-	19.3	20.0	21.9	-
		S/T	0.65	0.54	0.38	-	0.68	0.56	0.39	-	0.69	0.58	0.40	-	0.72	0.60	0.41	-	0.74	0.62	0.43	-	0.75	0.63	0.43	-
		ΔT	20	17	13	-	20	17	13	-	20	17	13	-	20	17	13	-	20	17	13	-	18	16	12	-
		kW	1.62	1.65	1.70	-	1.74	1.77	1.83	-	1.84	1.88	1.94	-	1.93	1.97	2.04	-	2.01	2.06	2.12	-	2.08	2.13	2.19	-
		Amps	5.9	6.1	6.2	-	6.4	6.5	6.8	-	6.9	7.1	7.3	-	7.4	7.6	7.9	-	7.9	8.1	8.4	-	8.4	8.6	8.9	-
		Hi PR	236	254	268	-	265	285	301	-	301	324	342	-	343	369	389	-	385	415	438	-	426	458	484	-
		Lo PR	106	113	123	-	112	119	130	-	117	124	136	-	123	130	142	-	128	137	149	-	133	141	154	-
	900	MBh	24.4	25.3	27.7	-	23.9	24.7	27.1	-	23.3	24.1	26.5	-	22.7	23.6	25.8	-	21.6	22.4	24.5	-	20.0	20.7	22.7	-
		S/T	0.69	0.58	0.40	-	0.72	0.60	0.42	-	0.74	0.62	0.43	-	0.76	0.64	0.44	-	0.79	0.66	0.46	-	0.80	0.66	0.46	-
		ΔT	17	15	11	-	18	15	12	-	18	15	12	-	18	15	12	-	17	15	11	-	16	14	11	-
		kW	1.64	1.67	1.72	-	1.76	1.80	1.85	-	1.87	1.91	1.97	-	1.96	2.01	2.07	-	2.04	2.09	2.16	-	2.11	2.16	2.23	-
		Amps	6.0	6.2	6.4	-	6.5	6.7	6.9	-	7.1	7.2	7.5	-	7.6	7.7	8.0	-	8.0	8.2	8.5	-	8.5	8.7	9.0	-
		Hi PR	240	259	273	-	270	290	307	-	307	330	349	-	349	376	397	-	393	423	447	-	434	467	494	-
		Lo PR	108	115	126	-	115	122	133	-	119	127	138	-	125	133	145	-	131	139	152	-	136	144	157	-
75	700	MBh	23.8	24.5	26.5	28.4	23.2	23.9	25.9	27.8	22.7	23.3	25.3	27.1	22.1	**22.8**	24.6	26.4	21.0	21.6	23.4	25.1	19.5	20.0	21.7	23.3
		S/T	0.73	0.66	0.50	0.32	0.76	0.68	0.51	0.33	0.78	0.70	0.53	0.34	0.81	**0.72**	0.55	0.35	0.84	0.75	0.57	0.36	0.84	0.75	0.57	0.37
		ΔT	23	21	17	12	23	21	17	12	23	21	18	12	23	**22**	18	12	23	21	17	12	22	20	16	11
		kW	1.61	1.64	1.69	1.75	1.73	1.77	1.82	1.88	1.84	1.87	1.93	2.00	1.93	**1.97**	2.03	2.10	2.01	2.05	2.12	2.19	2.08	2.12	2.19	2.26
		Amps	5.9	6.0	6.2	6.5	6.4	6.5	6.7	7.0	6.9	7.1	7.3	7.6	7.4	**7.6**	7.8	8.1	7.9	8.1	8.3	8.7	8.3	8.5	8.8	9.2
		Hi PR	235	253	267	279	264	284	300	313	300	323	341	356	342	**368**	388	405	384	414	437	456	425	457	483	503
		Lo PR	106	113	123	131	112	119	130	139	116	124	135	144	122	**130**	142	151	128	136	149	158	133	141	154	164
	725	MBh	24.0	24.7	26.8	28.7	23.4	24.1	26.1	28.0	22.9	23.6	25.5	27.4	22.3	**23.0**	24.9	26.7	21.2	21.8	23.6	25.4	19.6	20.2	21.9	23.5
		S/T	0.74	0.66	0.50	0.32	0.77	0.69	0.52	0.33	0.79	0.70	0.53	0.34	0.81	**0.73**	0.55	0.35	0.84	0.76	0.57	0.37	0.85	0.76	0.58	0.37
		ΔT	23	21	17	12	23	21	17	12	23	21	17	12	23	**21**	17	12	23	21	17	12	21	20	16	11
		kW	1.63	1.66	1.71	1.77	1.75	1.79	1.84	1.90	1.86	1.89	1.95	2.02	1.95	**1.99**	2.05	2.12	2.03	2.07	2.14	2.21	2.10	2.14	2.21	2.29
		Amps	6.0	6.1	6.3	6.5	6.4	6.6	6.8	7.1	7.0	7.2	7.4	7.7	7.5	**7.7**	7.9	8.2	8.0	8.2	8.4	8.8	8.4	8.7	8.9	9.3
		Hi PR	238	256	271	282	267	288	304	317	304	327	345	360	346	**372**	393	410	389	419	442	462	430	463	489	510
		Lo PR	107	114	125	133	113	121	132	140	118	125	137	146	124	**132**	144	153	130	138	151	161	134	143	156	166
	900	MBh	24.8	25.6	27.7	29.7	24.3	25.0	27.0	29.0	23.7	24.4	26.4	28.3	23.1	**23.8**	25.8	27.6	22.0	22.6	24.5	26.3	20.3	20.9	22.7	24.3
		S/T	0.79	0.70	0.53	0.34	0.82	0.73	0.55	0.36	0.84	0.75	0.57	0.36	0.86	**0.77**	0.59	0.38	0.90	0.80	0.61	0.39	0.90	0.81	0.61	0.39
		ΔT	20	18	15	10	20	19	15	11	20	19	15	11	20	**19**	15	11	20	19	15	10	19	17	14	10
		kW	1.65	1.69	1.74	1.79	1.78	1.81	1.87	1.93	1.88	1.92	1.99	2.05	1.98	**2.02**	2.09	2.16	2.06	2.11	2.17	2.25	2.13	2.18	2.25	2.32
		Amps	6.1	6.2	6.4	6.7	6.6	6.7	6.9	7.2	7.1	7.3	7.5	7.8	7.6	**7.8**	8.1	8.4	8.1	8.3	8.6	8.9	8.6	8.8	9.1	9.5
		Hi PR	243	261	276	288	273	293	310	323	310	334	352	367	353	**380**	401	418	397	427	451	471	439	472	499	520
		Lo PR	110	117	127	135	116	123	134	143	120	128	140	149	126	**134**	147	156	132	141	154	164	137	146	159	169

IDB: Entering Indoor Dry Bulb Temperature

High and low pressures are measured at the liquid and suction service valves.

Shaded area reflects ACCA (TVA) conditions

kW = Total system power

Amps = outdoor unit amps (comp.+fan)

Expanded Cooling Data — SSX140241BA / CA*F3636*6C* (cont.)

			Outdoor Ambient Temperature																							
			65ºF				75ºF				85ºF				95ºF				105ºF				115ºF			
			Entering Indoor Wet Bulb Temperature																							
IDB	Airflow		59	63	67	71	59	63	67	71	59	63	67	71	59	63	67	71	59	63	67	71	59	63	67	71
80	700	MBh	24.2	24.7	26.4	28.2	23.6	24.1	25.8	27.6	23.1	23.6	25.2	26.9	22.5	23.0	24.6	26.3	21.4	21.8	23.3	24.9	19.8	20.2	21.6	23.1
		S/T	0.81	0.76	0.61	0.46	0.83	0.78	0.64	0.48	0.86	0.80	0.65	0.49	0.88	0.83	0.67	0.50	0.92	0.86	0.70	0.52	0.92	0.87	0.71	0.53
		ΔT	26	25	21	17	26	25	22	17	26	25	22	17	26	25	22	17	26	25	21	17	24	23	20	16
		kW	1.62	1.66	1.71	1.76	1.74	1.78	1.84	1.89	1.85	1.89	1.95	2.01	1.94	1.99	2.05	2.12	2.02	2.07	2.13	2.20	2.09	2.14	2.21	2.28
		Amps	5.9	6.1	6.3	6.5	6.4	6.6	6.8	7.1	7.0	7.2	7.4	7.7	7.5	7.6	7.9	8.2	7.9	8.1	8.4	8.7	8.4	8.6	8.9	9.3
		Hi PR	237	255	270	281	266	287	303	316	303	326	344	359	345	371	392	409	388	418	441	460	429	462	487	508
		Lo PR	107	114	124	132	113	120	131	140	118	125	137	145	123	131	143	153	129	138	150	160	134	142	155	166
	725	MBh	24.4	25.0	26.7	28.5	23.9	24.4	26.1	27.8	23.3	23.8	25.4	27.2	22.7	23.2	**24.8**	26.5	21.6	22.1	23.6	25.2	20.0	20.4	21.8	23.3
		S/T	0.81	0.76	0.62	0.46	0.84	0.79	0.64	0.48	0.86	0.81	0.66	0.49	0.89	0.84	**0.68**	0.51	0.93	0.87	0.71	0.53	0.93	0.88	0.71	0.53
		ΔT	25	24	21	17	26	24	21	17	26	24	21	17	26	25	**21**	17	25	24	21	17	24	23	20	16
		kW	1.64	1.67	1.73	1.78	1.76	1.80	1.86	1.91	1.87	1.91	1.97	2.03	1.96	2.01	**2.07**	2.14	2.05	2.09	2.16	2.23	2.11	2.16	2.23	2.31
		Amps	6.0	6.2	6.4	6.6	6.5	6.7	6.9	7.1	7.1	7.2	7.5	7.8	7.6	7.7	**8.0**	8.3	8.0	8.2	8.5	8.8	8.5	8.7	9.0	9.4
		Hi PR	241	259	273	285	270	290	307	320	307	330	349	364	350	376	**397**	414	393	423	447	466	435	468	494	515
		Lo PR	108	115	126	134	115	122	133	142	119	127	138	147	125	133	**145**	155	131	139	152	162	136	144	158	168
	900	MBh	25.3	25.8	27.6	29.5	24.7	25.2	27.0	28.8	24.1	24.6	26.3	28.1	23.5	24.0	25.7	27.5	22.3	22.8	24.4	26.1	20.7	21.2	22.6	24.2
		S/T	0.86	0.81	0.66	0.49	0.90	0.84	0.68	0.51	0.92	0.86	0.70	0.52	0.95	0.89	0.72	0.54	1.00	0.92	0.75	0.56	1.00	0.93	0.76	0.57
		ΔT	22	21	19	15	23	22	19	15	23	22	19	15	23	22	19	15	23	22	19	15	21	20	17	14
		kW	1.67	1.70	1.75	1.81	1.79	1.83	1.88	1.94	1.90	1.94	2.00	2.07	2.00	2.04	2.10	2.17	2.08	2.12	2.19	2.26	2.15	2.20	2.27	2.34
		Amps	6.1	6.3	6.5	6.7	6.6	6.8	7.0	7.3	7.2	7.4	7.6	7.9	7.7	7.9	8.1	8.5	8.2	8.4	8.7	9.0	8.7	8.9	9.2	9.5
		Hi PR	245	264	279	291	275	296	313	326	313	337	356	371	357	384	405	423	401	432	456	476	443	477	504	525
		Lo PR	111	118	128	137	117	124	136	145	121	129	141	150	128	136	148	158	134	142	155	165	138	147	161	171
85	700	MBh	24.6	25.1	26.3	28.0	24.0	24.5	25.7	27.4	23.5	23.9	25.1	26.7	22.9	23.3	24.4	26.1	21.7	22.2	23.2	24.8	20.1	20.5	21.5	22.9
		S/T	0.84	0.81	0.73	0.60	0.87	0.84	0.76	0.62	0.90	0.87	0.78	0.63	0.93	0.89	0.81	0.65	0.96	0.93	0.84	0.68	0.97	0.93	0.84	0.68
		ΔT	27	27	25	22	28	27	26	22	28	27	26	22	28	27	26	22	27	27	26	22	26	25	24	21
		kW	1.64	1.67	1.72	1.77	1.76	1.79	1.85	1.91	1.87	1.90	1.96	2.03	1.96	2.00	2.07	2.13	2.04	2.08	2.15	2.22	2.11	2.16	2.23	2.30
		Amps	6.0	6.1	6.3	6.6	6.5	6.6	6.9	7.1	7.0	7.2	7.5	7.7	7.5	7.7	8.0	8.3	8.0	8.2	8.5	8.8	8.5	8.7	9.0	9.3
		Hi PR	240	258	272	284	269	290	306	319	306	329	348	363	349	375	396	413	392	422	446	465	433	466	492	513
		Lo PR	108	115	126	134	114	122	133	141	119	126	138	147	125	133	145	154	131	139	152	162	135	144	157	167
	725	MBh	24.9	25.3	26.5	28.3	24.3	24.7	25.9	27.7	23.7	24.2	25.3	27.0	23.1	23.6	24.7	26.3	22.0	22.4	23.5	25.0	20.3	20.7	21.7	23.2
		S/T	0.85	0.82	0.74	0.60	0.88	0.85	0.77	0.62	0.91	0.87	0.79	0.64	0.94	0.90	0.81	0.66	0.97	0.94	0.85	0.69	0.98	0.94	0.85	0.69
		ΔT	27	26	25	22	27	27	25	22	27	27	25	22	27	27	25	22	27	27	25	22	25	25	23	20
		kW	1.65	1.69	1.74	1.79	1.78	1.81	1.87	1.93	1.88	1.92	1.99	2.05	1.98	2.02	2.09	2.16	2.06	2.11	2.17	2.25	2.13	2.18	2.25	2.32
		Amps	6.1	6.2	6.4	6.7	6.6	6.7	6.9	7.2	7.1	7.3	7.6	7.8	7.6	7.8	8.1	8.4	8.1	8.3	8.6	8.9	8.6	8.8	9.1	9.5
		Hi PR	243	261	276	288	273	293	310	323	310	334	352	367	353	380	401	419	397	428	451	471	439	472	499	520
		Lo PR	110	117	127	136	116	123	134	143	120	128	140	149	126	134	147	156	132	141	154	164	137	146	159	169
	900	MBh	25.7	26.2	27.5	29.3	25.1	25.6	26.8	28.6	24.5	25.0	26.2	27.9	23.9	24.4	25.5	27.3	22.7	23.2	24.3	25.9	21.1	21.5	22.5	24.0
		S/T	0.91	0.87	0.79	0.64	0.94	0.91	0.82	0.66	0.96	0.93	0.84	0.68	0.99	0.96	0.87	0.70	1.00	1.00	0.90	0.73	1.00	1.00	0.91	0.73
		ΔT	24	23	22	19	24	24	22	19	24	24	22	19	24	24	23	20	23	24	22	19	22	22	21	18
		kW	1.68	1.71	1.77	1.82	1.80	1.84	1.90	1.96	1.91	1.96	2.02	2.08	2.01	2.06	2.12	2.19	2.10	2.14	2.21	2.28	2.17	2.21	2.29	2.36
		Amps	6.2	6.3	6.5	6.8	6.7	6.8	7.1	7.3	7.3	7.4	7.7	8.0	7.8	8.0	8.2	8.5	8.3	8.5	8.8	9.1	8.8	9.0	9.3	9.6
		Hi PR	248	267	282	294	278	299	316	330	316	340	359	375	360	388	409	427	405	436	460	480	448	482	509	531
		Lo PR	112	119	130	138	118	126	137	146	123	131	143	152	129	137	150	159	135	144	157	167	140	149	162	173

IDB: Entering Indoor Dry Bulb Temperature

High and low pressures are measured at the liquid and suction service valves.

Shaded area reflects AHRI (TVA) conditions

kW = Total system power

Amps = outdoor unit amps (comp.+fan)

Expanded Cooling Data — SSX140301A* / CA*F3642C6A* / .063 Orifice

			Outdoor Ambient Temperature																							
			65ºF				75ºF				85ºF				95ºF				105ºF				115ºF			
			Entering Indoor Wet Bulb Temperature																							
IDB	Airflow		59	63	67	71	59	63	67	71	59	63	67	71	59	63	67	71	59	63	67	71	59	63	67	71
70	1181	MBh	28.2	29.3	32.0	-	27.6	28.6	31.3	-	26.9	27.9	30.6	-	26.3	27.2	29.8	-	24.9	25.8	28.3	-	23.1	23.9	26.2	-
		S/T	0.73	0.61	0.42	-	0.76	0.64	0.44	-	0.78	0.65	0.45	-	0.81	0.67	0.47	-	0.84	0.70	0.48	-	0.84	0.70	0.49	-
		ΔT	16	14	11	-	16	14	11	-	16	14	11	-	16	14	11	-	16	14	11	-	15	13	10	-
		kW	1.93	1.97	2.03	-	2.07	2.11	2.17	-	2.18	2.23	2.29	-	2.29	2.33	2.40	-	2.37	2.42	2.50	-	2.45	2.50	2.58	-
		Amps	6.6	6.8	7.0	-	7.2	7.3	7.6	-	7.8	7.9	8.2	-	8.3	8.5	8.7	-	8.8	9.0	9.3	-	9.3	9.5	9.8	-
		Hi PR	233	250	254	-	263	283	287	-	299	322	326	-	341	366	372	-	383	412	418	-	429	462	468	-
		Lo PR	122	126	137	-	125	129	141	-	130	134	146	-	133	137	150	-	136	140	153	-	139	144	157	-
	1050	MBh	27.4	28.4	31.1	-	26.8	27.7	30.4	-	26.1	27.1	29.7	-	25.5	26.4	28.9	-	24.2	25.1	27.5	-	22.4	23.2	25.5	-
		S/T	0.70	0.58	0.41	-	0.73	0.61	0.42	-	0.74	0.62	0.43	-	0.77	0.64	0.44	-	0.80	0.67	0.46	-	0.80	0.67	0.47	-
		ΔT	17	15	11	-	17	15	11	-	17	15	11	-	17	15	11	-	17	15	11	-	16	14	10	-
		kW	1.92	1.96	2.01	-	2.05	2.09	2.15	-	2.17	2.21	2.27	-	2.27	2.31	2.38	-	2.36	2.40	2.48	-	2.43	2.48	2.56	-
		Amps	6.6	6.7	6.9	-	7.1	7.3	7.5	-	7.7	7.9	8.1	-	8.2	8.4	8.7	-	8.7	8.9	9.2	-	9.2	9.4	9.8	-
		Hi PR	230	248	251	-	260	280	284	-	296	318	323	-	337	363	368	-	380	408	414	-	425	457	464	-
		Lo PR	121	124	136	-	124	128	140	-	128	132	145	-	132	136	149	-	135	139	151	-	138	142	155	-
	919	MBh	25.3	26.2	28.7	-	24.7	25.6	28.1	-	24.1	25.0	27.4	-	23.5	24.4	26.7	-	22.3	23.2	25.4	-	20.7	21.5	23.5	-
		S/T	0.68	0.56	0.39	-	0.70	0.58	0.40	-	0.72	0.60	0.42	-	0.74	0.62	0.43	-	0.77	0.64	0.44	-	0.78	0.65	0.45	-
		ΔT	17	15	11	-	17	15	11	-	17	15	11	-	17	15	11	-	17	15	11	-	16	14	11	-
		kW	1.91	1.94	2.00	-	2.04	2.08	2.14	-	2.15	2.19	2.26	-	2.25	2.30	2.37	-	2.34	2.39	2.46	-	2.41	2.46	2.54	-
		Amps	6.5	6.7	6.9	-	7.0	7.2	7.4	-	7.6	7.8	8.1	-	8.1	8.3	8.6	-	8.6	8.8	9.1	-	9.1	9.4	9.7	-
		Hi PR	228	245	249	-	258	277	281	-	293	315	320	-	334	359	364	-	376	404	410	-	421	452	459	-
		Lo PR	119	123	135	-	123	127	138	-	127	131	143	-	131	135	147	-	133	137	150	-	136	141	154	-
75	1181	MBh	28.7	29.5	32.0	34.3	28.0	28.9	31.2	33.5	27.4	28.2	30.5	32.7	26.7	**27.5**	29.8	31.9	25.4	26.1	28.3	30.3	23.5	24.2	26.2	28.1
		S/T	0.83	0.75	0.56	0.36	0.86	0.77	0.59	0.38	0.89	0.79	0.60	0.39	0.92	**0.82**	0.62	0.40	0.95	0.85	0.64	0.41	0.96	0.86	0.65	0.42
		ΔT	19	17	14	10	19	17	14	10	19	17	14	10	19	**18**	14	10	19	17	14	10	18	16	13	9
		kW	1.93	1.97	2.03	2.08	2.07	2.11	2.17	2.23	2.18	2.23	2.29	2.36	2.29	**2.33**	2.40	2.48	2.37	2.42	2.50	2.57	2.45	2.50	2.58	2.66
		Amps	6.6	6.8	7.0	7.3	7.2	7.3	7.6	7.8	7.8	7.9	8.2	8.5	8.3	**8.5**	8.7	9.1	8.8	9.0	9.3	9.6	9.3	9.5	9.8	10.2
		Hi PR	233	250	254	259	263	283	287	293	299	322	326	333	341	**366**	372	380	383	412	418	427	429	462	468	478
		Lo PR	122	126	137	146	125	129	141	150	130	134	146	156	133	**137**	150	160	136	140	153	163	139	144	157	167
	1050	MBh	27.9	28.7	31.1	33.3	27.2	28.0	30.3	32.6	26.6	27.4	29.6	31.8	25.9	**26.7**	28.9	31.0	24.6	25.4	27.4	29.5	22.8	23.5	25.4	27.3
		S/T	0.80	0.71	0.54	0.35	0.82	0.74	0.56	0.36	0.85	0.76	0.57	0.37	0.87	**0.78**	0.59	0.38	0.91	0.81	0.61	0.39	0.91	0.82	0.62	0.40
		ΔT	19	18	15	10	20	18	15	10	20	18	15	10	20	**18**	15	10	20	18	15	10	18	17	14	10
		kW	1.92	1.96	2.01	2.07	2.05	2.09	2.15	2.21	2.17	2.21	2.27	2.34	2.27	**2.31**	2.38	2.46	2.36	2.40	2.48	2.55	2.43	2.48	2.56	2.64
		Amps	6.6	6.7	6.9	7.2	7.1	7.3	7.5	7.8	7.7	7.9	8.1	8.4	8.2	**8.4**	8.7	9.0	8.7	8.9	9.2	9.6	9.2	9.4	9.8	10.1
		Hi PR	230	248	251	257	260	280	284	290	296	318	323	330	337	**363**	368	376	380	408	414	423	425	457	464	474
		Lo PR	121	124	136	145	124	128	140	149	128	132	145	154	132	**136**	149	158	135	139	151	161	138	142	155	165
	919	MBh	25.7	26.5	28.7	30.8	25.1	25.9	28.0	30.0	24.5	25.2	27.3	29.3	23.9	**24.6**	26.7	28.6	22.7	23.4	25.3	27.2	21.1	21.7	23.5	25.2
		S/T	0.77	0.69	0.52	0.33	0.80	0.71	0.54	0.35	0.82	0.73	0.55	0.36	0.84	**0.75**	0.57	0.37	0.87	0.78	0.59	0.38	0.88	0.79	0.60	0.38
		ΔT	20	18	15	10	20	18	15	10	20	18	15	10	20	**19**	15	10	20	18	15	10	19	17	14	10
		kW	1.91	1.94	2.00	2.05	2.04	2.08	2.14	2.20	2.15	2.19	2.26	2.33	2.25	**2.30**	2.37	2.44	2.34	2.39	2.46	2.53	2.41	2.46	2.54	2.62
		Amps	6.5	6.7	6.9	7.1	7.0	7.2	7.4	7.7	7.6	7.8	8.1	8.3	8.1	**8.3**	8.6	8.9	8.6	8.8	9.1	9.5	9.1	9.4	9.7	10.0
		Hi PR	228	245	249	254	258	277	281	287	293	315	320	327	334	**359**	364	372	376	404	410	419	421	452	459	469
		Lo PR	119	123	135	143	123	127	138	147	127	131	143	153	131	**135**	147	157	133	137	150	160	136	141	154	164

IDB: Entering Indoor Dry Bulb Temperature

High and low pressures are measured at the liquid and suction service valves.

Shaded area reflects ACCA (TVA) conditions

kW = Total system power

Amps = outdoor unit amps (comp.+fan)

Expanded Cooling Data — SSX140301A* / CA*F3642C6A* / .063 Orifice (cont.)

			Outdoor Ambient Temperature																							
			65ºF				75ºF				85ºF				95ºF				105ºF				115ºF			
			Entering Indoor Wet Bulb Temperature																							
IDB	Airflow		59	63	67	71	59	63	67	71	59	63	67	71	59	63	67	71	59	63	67	71	59	63	67	71
80	1181	MBh	29.2	29.8	31.9	34.1	28.5	29.2	31.1	33.3	27.9	28.5	30.4	32.5	27.2	27.8	29.7	31.7	25.8	26.4	28.2	30.1	23.9	24.4	26.1	27.9
		S/T	0.92	0.86	0.70	0.52	0.95	0.89	0.72	0.54	1.00	0.91	0.74	0.55	1.00	0.94	0.77	0.57	1.00	1.00	0.80	0.59	1.00	1.00	0.80	0.60
		ΔT	21	20	17	14	21	20	18	14	22	20	18	14	21	20	18	14	20	21	17	14	19	19	16	13
		kW	1.93	1.97	2.03	2.08	2.07	2.11	2.17	2.23	2.18	2.23	2.29	2.36	2.29	2.33	2.40	2.48	2.37	2.42	2.50	2.57	2.45	2.50	2.58	2.66
		Amps	6.6	6.8	7.0	7.3	7.2	7.3	7.6	7.8	7.8	7.9	8.2	8.5	8.3	8.5	8.7	9.1	8.8	9.0	9.3	9.6	9.3	9.5	9.8	10.2
		Hi PR	233	250	254	259	263	283	287	293	299	322	326	333	341	366	372	380	383	412	418	427	429	462	468	478
		Lo PR	122	126	137	146	125	129	141	150	130	134	146	156	133	137	150	160	136	140	153	163	139	144	157	167
	1050	MBh	28.4	29.0	31.0	33.1	27.7	28.3	30.2	32.3	27.0	27.6	29.5	31.6	26.4	27.0	**28.8**	30.8	25.1	25.6	27.4	29.2	23.2	23.7	25.3	27.1
		S/T	0.87	0.82	0.67	0.50	0.90	0.85	0.69	0.52	0.93	0.87	0.71	0.53	0.96	0.90	**0.73**	0.55	0.99	0.93	0.76	0.57	1.00	0.94	0.77	0.57
		ΔT	22	21	18	14	22	21	18	15	22	21	18	15	22	21	**18**	15	22	21	18	15	20	20	17	14
		kW	1.92	1.96	2.01	2.07	2.05	2.09	2.15	2.21	2.17	2.21	2.27	2.34	2.27	2.31	**2.38**	2.46	2.36	2.40	2.48	2.55	2.43	2.48	2.56	2.64
		Amps	6.6	6.7	6.9	7.2	7.1	7.3	7.5	7.8	7.7	7.9	8.1	8.4	8.2	8.4	**8.7**	9.0	8.7	8.9	9.2	9.6	9.2	9.4	9.8	10.1
		Hi PR	230	248	251	257	260	280	284	290	296	318	323	330	337	363	**368**	376	380	408	414	423	425	457	464	474
		Lo PR	121	124	136	145	124	128	140	149	128	132	145	154	132	136	**149**	158	135	139	151	161	138	142	155	165
	919	MBh	26.2	26.7	28.6	30.5	25.6	26.1	27.9	29.8	25.0	25.5	27.2	29.1	24.3	24.9	26.6	28.4	23.1	23.6	25.3	27.0	21.4	21.9	23.4	25.0
		S/T	0.84	0.79	0.64	0.48	0.87	0.82	0.67	0.50	0.89	0.84	0.68	0.51	0.92	0.87	0.70	0.53	0.96	0.90	0.73	0.55	0.97	0.91	0.74	0.55
		ΔT	22	21	18	15	22	21	19	15	22	21	19	15	22	22	19	15	22	21	18	15	21	20	17	14
		kW	1.91	1.94	2.00	2.05	2.04	2.08	2.14	2.20	2.15	2.19	2.26	2.33	2.25	2.30	2.37	2.44	2.34	2.39	2.46	2.53	2.41	2.46	2.54	2.62
		Amps	6.5	6.7	6.9	7.1	7.0	7.2	7.4	7.7	7.6	7.8	8.1	8.3	8.1	8.3	8.6	8.9	8.6	8.8	9.1	9.5	9.1	9.4	9.7	10.0
		Hi PR	228	245	249	254	258	277	281	287	293	315	320	327	334	359	364	372	376	404	410	419	421	452	459	469
		Lo PR	119	123	135	143	123	127	138	147	127	131	143	153	131	135	147	157	133	137	150	160	136	141	154	164
85	1181	MBh	29.7	30.3	31.7	33.9	29.0	29.6	31.0	33.1	28.3	28.9	30.3	32.3	27.6	28.2	29.5	31.5	26.3	26.8	28.0	29.9	24.3	24.8	26.0	27.7
		S/T	0.96	0.93	0.84	0.68	0.99	0.96	0.87	0.70	1.00	0.98	0.89	0.72	1.00	1.00	0.92	0.74	1.00	1.00	0.95	0.77	1.00	1.00	0.96	0.78
		ΔT	22	22	21	18	22	22	21	18	22	22	21	18	22	22	21	18	20	21	21	18	19	19	19	17
		kW	1.93	1.97	2.03	2.08	2.07	2.11	2.17	2.23	2.18	2.23	2.29	2.36	2.29	2.33	2.40	2.48	2.37	2.42	2.50	2.57	2.45	2.50	2.58	2.66
		Amps	6.6	6.8	7.0	7.3	7.2	7.3	7.6	7.8	7.8	7.9	8.2	8.5	8.3	8.5	8.7	9.1	8.8	9.0	9.3	9.6	9.3	9.5	9.8	10.2
		Hi PR	233	250	254	259	263	283	287	293	299	322	326	333	341	366	372	380	383	412	418	427	429	462	468	478
		Lo PR	122	126	137	146	125	129	141	150	130	134	146	156	133	137	150	160	136	140	153	163	139	144	157	167
	1050	MBh	28.9	29.4	30.8	32.9	28.2	28.7	30.1	32.1	27.5	28.0	29.4	31.3	26.8	27.4	28.7	30.6	25.5	26.0	27.2	29.0	23.6	24.1	25.2	26.9
		S/T	0.92	0.88	0.80	0.65	0.95	0.92	0.83	0.67	0.97	0.94	0.85	0.69	1.00	0.97	0.87	0.71	1.00	1.00	0.91	0.74	1.00	1.00	0.91	0.74
		ΔT	23	23	21	19	23	23	22	19	23	23	22	19	24	23	22	19	22	23	22	19	21	21	20	17
		kW	1.92	1.96	2.01	2.07	2.05	2.09	2.15	2.21	2.17	2.21	2.27	2.34	2.27	2.31	2.38	2.46	2.36	2.40	2.48	2.55	2.43	2.48	2.56	2.64
		Amps	6.6	6.7	6.9	7.2	7.1	7.3	7.5	7.8	7.7	7.9	8.1	8.4	8.2	8.4	8.7	9.0	8.7	8.9	9.2	9.6	9.2	9.4	9.8	10.1
		Hi PR	230	248	251	257	260	280	284	290	296	318	323	330	337	363	368	376	380	408	414	423	425	457	464	474
		Lo PR	121	124	136	145	124	128	140	149	128	132	145	154	132	136	149	158	135	139	151	161	138	142	155	165
	919	MBh	26.6	27.1	28.4	30.3	26.0	26.5	27.8	29.6	25.4	25.9	27.1	28.9	24.8	25.3	26.4	28.2	23.5	24.0	25.1	26.8	21.8	22.2	23.3	24.8
		S/T	0.88	0.85	0.77	0.62	0.91	0.88	0.80	0.65	0.94	0.90	0.82	0.66	0.97	0.93	0.84	0.68	1.00	0.97	0.87	0.71	1.00	0.98	0.88	0.72
		ΔT	24	23	22	19	24	23	22	19	24	23	22	19	24	24	22	19	24	23	22	19	22	22	21	18
		kW	1.91	1.94	2.00	2.05	2.04	2.08	2.14	2.20	2.15	2.19	2.26	2.33	2.25	2.30	2.37	2.44	2.34	2.39	2.46	2.53	2.41	2.46	2.54	2.62
		Amps	6.5	6.7	6.9	7.1	7.0	7.2	7.4	7.7	7.6	7.8	8.1	8.3	8.1	8.3	8.6	8.9	8.6	8.8	9.1	9.5	9.1	9.4	9.7	10.0
		Hi PR	228	245	249	254	258	277	281	287	293	315	320	327	334	359	364	372	376	404	410	419	421	452	459	469
		Lo PR	119	123	135	143	123	127	138	147	127	131	143	153	131	135	147	157	133	137	150	160	136	141	154	164

IDB: Entering Indoor Dry Bulb Temperature

High and low pressures are measured at the liquid and suction service valves.

Shaded area reflects AHRI (TVA) conditions

kW = Total system power

Amps = outdoor unit amps (comp.+fan)

Expanded Cooling Data — SSX140301BA / CA*F3642*6C*

			Outdoor Ambient Temperature																							
			65ºF				75ºF				85ºF				95ºF				105ºF				115ºF			
			Entering Indoor Wet Bulb Temperature																							
IDB	Airflow		59	63	67	71	59	63	67	71	59	63	67	71	59	63	67	71	59	63	67	71	59	63	67	71
70	875	MBh	25.3	26.2	28.7	-	24.7	25.6	28.1	-	24.1	25.0	27.4	-	23.5	24.4	26.7	-	22.3	23.2	25.4	-	20.7	21.5	23.5	-
		S/T	0.68	0.57	0.40	-	0.71	0.59	0.41	-	0.73	0.61	0.42	-	0.75	0.63	0.43	-	0.78	0.65	0.45	-	0.79	0.66	0.45	-
		ΔT	18	16	12	-	18	16	12	-	18	16	12	-	19	16	12	-	18	16	12	-	17	15	11	-
		kW	1.92	1.96	2.01	-	2.05	2.09	2.15	-	2.17	2.21	2.27	-	2.27	2.31	2.38	-	2.35	2.40	2.47	-	2.43	2.47	2.55	-
		Amps	6.8	6.9	7.1	-	7.3	7.5	7.7	-	7.9	8.1	8.3	-	8.4	8.6	8.9	-	8.9	9.1	9.4	-	9.4	9.7	10.0	-
		Hi PR	217	234	247	-	244	262	277	-	277	298	315	-	316	340	359	-	355	382	404	-	393	423	446	-
		Lo PR	105	112	122	-	111	118	129	-	115	123	134	-	121	129	141	-	127	135	148	-	131	140	153	-
	1000	MBh	27.4	28.4	31.1	-	26.8	27.7	30.4	-	26.1	27.1	29.7	-	25.5	26.4	28.9	-	24.2	25.1	27.5	-	22.4	23.2	25.5	-
		S/T	0.71	0.59	0.41	-	0.74	0.61	0.43	-	0.75	0.63	0.44	-	0.78	0.65	0.45	-	0.81	0.67	0.47	-	0.81	0.68	0.47	-
		ΔT	18	15	12	-	18	16	12	-	18	16	12	-	18	16	12	-	18	16	12	-	17	15	11	-
		kW	1.97	2.00	2.06	-	2.10	2.14	2.20	-	2.22	2.26	2.32	-	2.32	2.36	2.43	-	2.41	2.45	2.53	-	2.48	2.53	2.61	-
		Amps	7.0	7.1	7.3	-	7.5	7.7	7.9	-	8.1	8.3	8.6	-	8.6	8.8	9.1	-	9.2	9.4	9.7	-	9.7	9.9	10.3	-
		Hi PR	224	241	255	-	251	271	286	-	286	308	325	-	326	350	370	-	366	394	416	-	405	436	460	-
		Lo PR	108	115	126	-	115	122	133	-	119	127	138	-	125	133	145	-	131	139	152	-	136	144	157	-
	1125	MBh	28.2	29.3	32.0	-	27.6	28.6	31.3	-	26.9	27.9	30.6	-	26.3	27.2	29.8	-	24.9	25.8	28.3	-	23.1	23.9	26.2	-
		S/T	0.74	0.62	0.43	-	0.77	0.64	0.45	-	0.79	0.66	0.46	-	0.82	0.68	0.47	-	0.85	0.71	0.49	-	0.85	0.71	0.49	-
		ΔT	17	15	11	-	17	15	11	-	17	15	11	-	18	15	12	-	17	15	11	-	16	14	11	-
		kW	1.98	2.02	2.07	-	2.11	2.15	2.22	-	2.23	2.28	2.34	-	2.34	2.38	2.45	-	2.42	2.47	2.55	-	2.50	2.55	2.63	-
		Amps	7.0	7.2	7.4	-	7.6	7.7	8.0	-	8.2	8.4	8.6	-	8.7	8.9	9.2	-	9.3	9.5	9.8	-	9.8	10.0	10.4	-
		Hi PR	226	244	257	-	254	273	289	-	289	311	328	-	329	354	374	-	370	398	420	-	409	440	465	-
		Lo PR	110	116	127	-	116	123	134	-	120	128	140	-	126	134	147	-	132	141	154	-	137	146	159	-
75	875	MBh	25.7	26.5	28.7	30.8	25.1	25.9	28.0	30.0	24.5	25.2	27.3	29.3	23.9	**24.6**	26.7	28.6	22.7	23.4	25.3	27.2	21.1	21.7	23.5	25.2
		S/T	0.78	0.70	0.53	0.34	0.81	0.72	0.55	0.35	0.83	0.74	0.56	0.36	0.85	**0.76**	0.58	0.37	0.89	0.79	0.60	0.39	0.89	0.80	0.60	0.39
		ΔT	21	19	16	11	21	20	16	11	21	20	16	11	21	**20**	16	11	21	19	16	11	20	18	15	10
		kW	1.94	1.97	2.03	2.09	2.07	2.11	2.17	2.23	2.18	2.23	2.29	2.36	2.28	**2.33**	2.40	2.47	2.37	2.42	2.49	2.57	2.44	2.49	2.57	2.65
		Amps	6.8	7.0	7.2	7.5	7.4	7.5	7.8	8.0	8.0	8.2	8.4	8.7	8.5	**8.7**	9.0	9.3	9.0	9.2	9.5	9.9	9.5	9.8	10.1	10.5
		Hi PR	220	236	249	260	246	265	280	292	280	301	318	332	319	**343**	363	378	359	386	408	425	397	427	451	470
		Lo PR	106	113	123	131	112	119	130	139	117	124	135	144	123	**130**	142	152	128	137	149	159	133	141	154	164
	1000	MBh	27.9	28.7	31.1	33.3	27.2	28.0	30.3	32.6	26.6	27.4	29.6	31.8	25.9	**26.7**	28.9	31.0	24.6	25.4	27.4	29.5	22.8	23.5	25.4	27.3
		S/T	0.81	0.72	0.55	0.35	0.84	0.75	0.57	0.36	0.86	0.77	0.58	0.37	0.89	**0.79**	0.60	0.39	0.92	0.82	0.62	0.40	0.93	0.83	0.63	0.40
		ΔT	21	19	16	11	21	19	16	11	21	19	16	11	21	**19**	16	11	21	19	16	11	19	18	15	10
		kW	1.98	2.02	2.07	2.13	2.11	2.15	2.22	2.28	2.23	2.28	2.34	2.41	2.34	**2.38**	2.45	2.53	2.43	2.47	2.55	2.63	2.50	2.55	2.63	2.71
		Amps	7.0	7.2	7.4	7.7	7.6	7.7	8.0	8.3	8.2	8.4	8.6	9.0	8.7	**8.9**	9.2	9.6	9.3	9.5	9.8	10.2	9.8	10.0	10.4	10.7
		Hi PR	226	244	257	268	254	273	289	301	289	311	328	342	329	**354**	374	390	370	398	421	439	409	440	465	485
		Lo PR	110	117	127	135	116	123	134	143	120	128	140	149	126	**134**	147	156	132	141	154	164	137	146	159	169
	1125	MBh	28.7	29.5	32.0	34.3	28.0	28.9	31.2	33.5	27.4	28.2	30.5	32.7	26.7	**27.5**	29.8	31.9	25.4	26.1	28.3	30.3	23.5	24.2	26.2	28.1
		S/T	0.85	0.76	0.57	0.37	0.88	0.78	0.59	0.38	0.90	0.80	0.61	0.39	0.93	**0.83**	0.63	0.40	0.96	0.86	0.65	0.42	0.97	0.87	0.66	0.42
		ΔT	20	18	15	10	20	18	15	10	20	19	15	10	20	**19**	15	11	20	18	15	10	19	17	14	10
		kW	1.99	2.03	2.09	2.15	2.13	2.17	2.23	2.30	2.25	2.29	2.36	2.43	2.35	**2.40**	2.47	2.55	2.44	2.49	2.57	2.65	2.52	2.57	2.65	2.73
		Amps	7.1	7.2	7.5	7.7	7.6	7.8	8.0	8.3	8.3	8.4	8.7	9.0	8.8	**9.0**	9.3	9.6	9.3	9.6	9.9	10.2	9.9	10.1	10.5	10.8
		Hi PR	229	246	260	271	257	276	291	304	292	314	331	346	332	**358**	378	394	374	402	425	443	413	444	469	489
		Lo PR	111	118	128	137	117	124	136	145	121	129	141	150	128	**136**	148	158	134	142	155	165	138	147	161	171

IDB: Entering Indoor Dry Bulb Temperature

High and low pressures are measured at the liquid and suction service valves.

Shaded area reflects ACCA (TVA) conditions

kW = Total system power

Amps = outdoor unit amps (comp.+fan)

Expanded Cooling Data — SSX140301BA / CA*F3642*6C* (cont.)

			Outdoor Ambient Temperature																							
			65ºF				75ºF				85ºF				95ºF				105ºF				115ºF			
			Entering Indoor Wet Bulb Temperature																							
IDB	Airflow		59	63	67	71	59	63	67	71	59	63	67	71	59	63	67	71	59	63	67	71	59	63	67	71
80	875	MBh	26.2	26.7	28.6	30.5	25.6	26.1	27.9	29.8	25.0	25.5	27.2	29.1	24.3	24.9	26.6	28.4	23.1	23.6	25.3	27.0	21.4	21.9	23.4	25.0
		S/T	0.85	0.80	0.65	0.49	0.88	0.83	0.68	0.50	0.91	0.85	0.69	0.52	0.94	0.88	0.71	0.53	0.97	0.91	0.74	0.55	0.98	0.92	0.75	0.56
		ΔT	23	22	20	16	24	23	20	16	24	23	20	16	24	23	20	16	24	23	20	16	22	21	18	15
		kW	1.95	1.99	2.04	2.10	2.08	2.12	2.18	2.25	2.20	2.24	2.31	2.38	2.30	2.35	2.42	2.49	2.39	2.44	2.51	2.58	2.46	2.51	2.59	2.67
		Amps	6.9	7.1	7.3	7.5	7.4	7.6	7.8	8.1	8.0	8.2	8.5	8.8	8.6	8.8	9.1	9.4	9.1	9.3	9.6	10.0	9.6	9.8	10.2	10.5
		Hi PR	222	239	252	263	249	268	283	295	283	305	322	335	322	347	366	382	363	390	412	430	401	431	455	475
		Lo PR	107	114	125	133	113	121	132	140	118	125	137	146	124	132	144	153	130	138	151	160	134	143	156	166
	1000	MBh	28.4	29.0	31.0	33.1	27.7	28.3	30.2	32.3	27.0	27.6	29.5	31.6	26.4	27.0	**28.8**	30.8	25.1	25.6	27.4	29.2	23.2	23.7	25.3	27.1
		S/T	0.88	0.83	0.68	0.50	0.92	0.86	0.70	0.52	0.94	0.88	0.72	0.54	0.97	0.91	**0.74**	0.55	1.00	0.94	0.77	0.57	1.00	0.95	0.78	0.58
		ΔT	23	22	19	15	23	22	19	16	23	22	19	16	24	23	**20**	16	23	22	19	15	21	21	18	14
		kW	1.99	2.03	2.09	2.15	2.13	2.17	2.23	2.30	2.25	2.29	2.36	2.43	2.35	2.40	**2.47**	2.55	2.44	2.49	2.57	2.65	2.52	2.57	2.65	2.73
		Amps	7.1	7.2	7.5	7.7	7.6	7.8	8.0	8.3	8.3	8.4	8.7	9.0	8.8	9.0	**9.3**	9.6	9.3	9.6	9.9	10.2	9.9	10.1	10.5	10.8
		Hi PR	229	246	260	271	257	276	292	304	292	314	332	346	332	358	**378**	394	374	402	425	443	413	444	469	490
		Lo PR	111	118	128	137	117	124	136	145	121	129	141	150	128	136	**148**	158	134	142	155	165	138	147	161	171
	1125	MBh	29.2	29.8	31.9	34.1	28.5	29.2	31.1	33.3	27.9	28.5	30.4	32.5	27.2	27.8	29.7	31.7	25.8	26.4	28.2	30.1	23.9	24.4	26.1	27.9
		S/T	0.93	0.87	0.71	0.53	0.96	0.90	0.73	0.55	1.00	0.92	0.75	0.56	1.00	0.95	0.78	0.58	1.00	1.00	0.81	0.60	1.00	1.00	0.81	0.61
		ΔT	22	21	18	15	22	21	19	15	23	22	19	15	22	22	19	15	21	22	19	15	20	20	17	14
		kW	2.01	2.05	2.10	2.16	2.14	2.19	2.25	2.31	2.26	2.31	2.38	2.45	2.37	2.42	2.49	2.57	2.46	2.51	2.59	2.67	2.54	2.59	2.67	2.75
		Amps	7.1	7.3	7.5	7.8	7.7	7.9	8.1	8.4	8.3	8.5	8.8	9.1	8.9	9.1	9.4	9.7	9.4	9.7	10.0	10.3	10.0	10.2	10.5	10.9
		Hi PR	231	248	262	274	259	279	294	307	295	317	335	349	336	361	381	398	378	406	429	447	417	449	474	494
		Lo PR	112	119	130	138	118	126	137	146	123	131	142	152	129	137	150	159	135	144	157	167	140	149	162	173
85	875	MBh	26.6	27.1	28.4	30.3	26.0	26.5	27.8	29.6	25.4	25.9	27.1	28.9	24.8	25.3	26.4	28.2	23.5	24.0	25.1	26.8	21.8	22.2	23.3	24.8
		S/T	0.89	0.86	0.78	0.63	0.93	0.89	0.81	0.65	0.95	0.92	0.83	0.67	0.98	0.95	0.85	0.69	1.00	0.98	0.89	0.72	1.00	0.99	0.89	0.73
		ΔT	25	25	23	20	25	25	24	20	25	25	24	20	26	25	24	21	25	25	23	20	23	23	22	19
		kW	1.97	2.00	2.06	2.12	2.10	2.14	2.20	2.26	2.21	2.26	2.32	2.39	2.32	2.36	2.43	2.51	2.41	2.45	2.53	2.60	2.48	2.53	2.61	2.69
		Amps	7.0	7.1	7.3	7.6	7.5	7.7	7.9	8.2	8.1	8.3	8.6	8.9	8.6	8.8	9.1	9.5	9.2	9.4	9.7	10.1	9.7	9.9	10.3	10.6
		Hi PR	224	241	255	265	251	270	286	298	286	308	325	339	326	350	370	386	366	394	416	434	405	435	460	480
		Lo PR	108	115	126	134	115	122	133	142	119	127	138	147	125	133	145	155	131	139	152	162	136	144	157	168
	1000	MBh	28.9	29.4	30.8	32.9	28.2	28.7	30.1	32.1	27.5	28.0	29.4	31.3	26.8	27.4	28.7	30.6	25.5	26.0	27.2	29.0	23.6	24.1	25.2	26.9
		S/T	0.93	0.90	0.81	0.66	0.96	0.93	0.84	0.68	0.99	0.95	0.86	0.70	1.00	0.98	0.89	0.72	1.00	1.00	0.92	0.75	1.00	1.00	0.93	0.75
		ΔT	25	24	23	20	25	25	23	20	25	25	23	20	25	25	23	20	23	24	23	20	22	22	22	19
		kW	2.01	2.05	2.10	2.16	2.14	2.19	2.25	2.31	2.26	2.31	2.38	2.45	2.37	2.42	2.49	2.57	2.46	2.51	2.59	2.67	2.54	2.59	2.67	2.75
		Amps	7.1	7.3	7.5	7.8	7.7	7.9	8.1	8.4	8.3	8.5	8.8	9.1	8.9	9.1	9.4	9.7	9.4	9.7	10.0	10.3	10.0	10.2	10.5	10.9
		Hi PR	231	248	262	274	259	279	294	307	295	317	335	349	336	361	381	398	378	406	429	447	417	449	474	494
		Lo PR	112	119	130	138	118	126	137	146	123	131	142	152	129	137	150	159	135	144	157	167	140	149	162	173
	1125	MBh	29.7	30.3	31.7	33.9	29.0	29.6	31.0	33.1	28.3	28.9	30.3	32.3	27.6	28.2	29.5	31.5	26.3	26.8	28.0	29.9	24.3	24.8	26.0	27.7
		S/T	0.97	0.94	0.85	0.69	1.00	0.97	0.88	0.71	1.00	1.00	0.90	0.73	1.00	1.00	0.93	0.75	1.00	1.00	0.96	0.78	1.00	1.00	0.97	0.79
		ΔT	24	23	22	19	24	24	22	19	23	24	22	19	23	23	22	19	21	22	22	19	20	20	21	18
		kW	2.02	2.06	2.12	2.18	2.16	2.20	2.26	2.33	2.28	2.33	2.39	2.47	2.39	2.44	2.51	2.59	2.48	2.53	2.61	2.69	2.56	2.61	2.69	2.78
		Amps	7.2	7.4	7.6	7.9	7.8	7.9	8.2	8.5	8.4	8.6	8.9	9.2	9.0	9.2	9.5	9.8	9.5	9.7	10.1	10.4	10.1	10.3	10.6	11.0
		Hi PR	233	251	265	276	262	282	297	310	298	320	338	353	339	365	385	402	381	410	433	452	421	453	479	499
		Lo PR	113	120	131	140	119	127	138	147	124	132	144	153	130	138	151	161	136	145	158	169	141	150	164	175

IDB: Entering Indoor Dry Bulb Temperature

High and low pressures are measured at the liquid and suction service valves.

Shaded area reflects AHRI (TVA) conditions

kW = Total system power

Amps = outdoor unit amps (comp.+fan)

Expanded Cooling Data — SSX140361A* / CA*F3642C6A* / .067 Orifice

			Outdoor Ambient Temperature																							
			65ºF				75ºF				85ºF				95ºF				105ºF				115ºF			
			Entering Indoor Wet Bulb Temperature																							
IDB	Airflow		59	63	67	71	59	63	67	71	59	63	67	71	59	63	67	71	59	63	67	71	59	63	67	71
70	1300	MBh	33.9	35.1	38.5	-	33.1	34.3	37.6	-	32.3	33.5	36.7	-	31.5	32.7	35.8	-	30.0	31.1	34.0	-	27.8	28.8	31.5	-
		S/T	0.72	0.60	0.41	-	0.74	0.62	0.43	-	0.76	0.64	0.44	-	0.79	0.66	0.46	-	0.82	0.68	0.47	-	0.82	0.69	0.48	-
		ΔT	17	15	11	-	17	15	11	-	17	15	11	-	18	15	12	-	17	15	11	-	16	14	11	-
		kW	2.40	2.45	2.52	-	2.57	2.62	2.70	-	2.72	2.77	2.85	-	2.85	2.91	2.99	-	2.96	3.02	3.11	-	3.05	3.12	3.22	-
		Amps	8.4	8.6	8.9	-	9.1	9.3	9.6	-	9.9	10.1	10.4	-	10.5	10.8	11.1	-	11.2	11.4	11.8	-	11.8	12.1	12.5	-
		Hi PR	241	260	263	-	273	293	298	-	310	334	338	-	354	380	386	-	382	411	416	-	453	487	493	-
		Lo PR	120	124	135	-	123	127	139	-	127	131	144	-	131	135	147	-	133	138	150	-	137	141	154	-
	1150	MBh	32.9	34.1	37.4	-	32.2	33.3	36.5	-	31.4	32.5	35.6	-	30.6	31.7	34.8	-	29.1	30.2	33.0	-	26.9	27.9	30.6	-
		S/T	0.68	0.57	0.40	-	0.71	0.59	0.41	-	0.73	0.61	0.42	-	0.75	0.63	0.43	-	0.78	0.65	0.45	-	0.79	0.66	0.45	-
		ΔT	18	16	12	-	18	16	12	-	18	16	12	-	18	16	12	-	18	16	12	-	17	15	11	-
		kW	2.38	2.43	2.50	-	2.55	2.60	2.68	-	2.70	2.75	2.83	-	2.83	2.88	2.97	-	2.94	3.00	3.09	-	3.03	3.09	3.19	-
		Amps	8.4	8.6	8.8	-	9.0	9.2	9.5	-	9.8	10.0	10.3	-	10.4	10.7	11.0	-	11.1	11.3	11.7	-	11.7	12.0	12.4	-
		Hi PR	239	257	261	-	270	291	295	-	307	330	335	-	350	376	382	-	378	406	412	-	448	482	489	-
		Lo PR	119	122	133	-	122	126	137	-	126	130	142	-	130	134	146	-	132	136	149	-	135	140	152	-
	1000	MBh	30.4	31.5	34.5	-	29.7	30.8	33.7	-	29.0	30.0	32.9	-	28.3	29.3	32.1	-	26.9	27.8	30.5	-	24.9	25.8	28.2	-
		S/T	0.66	0.55	0.38	-	0.68	0.57	0.40	-	0.70	0.59	0.41	-	0.72	0.60	0.42	-	0.75	0.63	0.43	-	0.76	0.63	0.44	-
		ΔT	18	16	12	-	19	16	12	-	19	16	12	-	19	16	12	-	19	16	12	-	17	15	11	-
		kW	2.37	2.41	2.48	-	2.53	2.58	2.66	-	2.68	2.73	2.81	-	2.80	2.86	2.95	-	2.91	2.97	3.06	-	3.01	3.07	3.16	-
		Amps	8.3	8.5	8.7	-	8.9	9.1	9.4	-	9.7	9.9	10.2	-	10.3	10.6	10.9	-	11.0	11.2	11.6	-	11.6	11.9	12.3	-
		Hi PR	237	254	258	-	268	288	292	-	304	327	332	-	347	373	378	-	374	402	408	-	444	477	484	-
		Lo PR	117	121	132	-	121	125	136	-	125	129	141	-	128	132	144	-	131	135	147	-	134	138	151	-
75	1300	MBh	34.5	35.5	38.4	41.2	33.7	34.7	37.5	40.3	32.9	33.8	36.6	39.3	32.1	**33.0**	35.7	38.4	30.5	31.4	34.0	36.4	28.2	29.1	31.5	33.8
		S/T	0.81	0.73	0.55	0.35	0.84	0.76	0.57	0.37	0.87	0.77	0.59	0.38	0.89	**0.80**	0.61	0.39	0.93	0.83	0.63	0.40	0.94	0.84	0.63	0.41
		ΔT	20	18	15	10	20	19	15	10	20	19	15	10	20	**19**	15	11	20	18	15	10	19	17	14	10
		kW	2.40	2.45	2.52	2.59	2.57	2.62	2.70	2.78	2.72	2.77	2.85	2.94	2.85	**2.91**	2.99	3.09	2.96	3.02	3.11	3.21	3.05	3.12	3.22	3.32
		Amps	8.4	8.6	8.9	9.2	9.1	9.3	9.6	9.9	9.9	10.1	10.4	10.8	10.5	**10.8**	11.1	11.5	11.2	11.4	11.8	12.2	11.8	12.1	12.5	13.0
		Hi PR	241	260	263	269	273	293	298	304	310	334	338	346	354	**380**	386	394	382	411	416	426	453	487	493	504
		Lo PR	120	124	135	144	123	127	139	148	127	131	144	153	131	**135**	147	157	133	138	150	160	137	141	154	164
	1150	MBh	33.5	34.5	37.3	40.0	32.7	33.7	36.4	39.1	31.9	32.9	35.6	38.2	31.1	**32.1**	34.7	37.2	29.6	30.5	33.0	35.4	27.4	28.2	30.5	32.8
		S/T	0.78	0.70	0.53	0.34	0.81	0.72	0.55	0.35	0.83	0.74	0.56	0.36	0.85	**0.76**	0.58	0.37	0.88	0.79	0.60	0.39	0.89	0.80	0.60	0.39
		ΔT	21	19	16	11	21	19	16	11	21	19	16	11	21	**20**	16	11	21	19	16	11	20	18	15	10
		kW	2.38	2.43	2.50	2.57	2.55	2.60	2.68	2.76	2.70	2.75	2.83	2.92	2.83	**2.88**	2.97	3.06	2.94	3.00	3.09	3.19	3.03	3.09	3.19	3.29
		Amps	8.4	8.6	8.8	9.1	9.0	9.2	9.5	9.9	9.8	10.0	10.3	10.7	10.4	**10.7**	11.0	11.4	11.1	11.3	11.7	12.1	11.7	12.0	12.4	12.8
		Hi PR	239	257	261	266	270	291	295	301	307	330	335	343	350	**376**	382	390	378	406	412	421	448	482	489	499
		Lo PR	119	122	133	142	122	126	137	146	126	130	142	151	130	**134**	146	155	132	136	149	158	135	140	152	162
	1000	MBh	30.9	31.8	34.4	37.0	30.2	31.1	33.6	36.1	29.5	30.3	32.8	35.2	28.7	**29.6**	32.0	34.4	27.3	28.1	30.4	32.7	25.3	26.0	28.2	30.3
		S/T	0.75	0.67	0.51	0.33	0.78	0.69	0.53	0.34	0.80	0.71	0.54	0.35	0.82	**0.74**	0.56	0.36	0.85	0.76	0.58	0.37	0.86	0.77	0.58	0.37
		ΔT	21	20	16	11	22	20	16	11	22	20	16	11	22	**20**	16	11	21	20	16	11	20	18	15	10
		kW	2.37	2.41	2.48	2.55	2.53	2.58	2.66	2.74	2.68	2.73	2.81	2.90	2.80	**2.86**	2.95	3.04	2.91	2.97	3.06	3.16	3.01	3.07	3.16	3.27
		Amps	8.3	8.5	8.7	9.1	8.9	9.1	9.4	9.8	9.7	9.9	10.2	10.6	10.3	**10.6**	10.9	11.3	11.0	11.2	11.6	12.0	11.6	11.9	12.3	12.7
		Hi PR	237	254	258	264	268	288	292	298	304	327	332	339	347	**373**	378	386	374	402	408	417	444	477	484	494
		Lo PR	117	121	132	141	121	125	136	145	125	129	141	150	128	**132**	144	154	131	135	147	157	134	138	151	161

IDB: Entering Indoor Dry Bulb Temperature

High and low pressures are measured at the liquid and suction service valves.

Shaded area reflects ACCA (TVA) conditions

kW = Total system power

Amps = outdoor unit amps (comp.+fan)

Expanded Cooling Data — SSX140361A* / CA*F3642C6A* / .067 Orifice (cont.)

			Outdoor Ambient Temperature																							
			65ºF				75ºF				85ºF				95ºF				105ºF				115ºF			
			Entering Indoor Wet Bulb Temperature																							
IDB	Airflow		59	63	67	71	59	63	67	71	59	63	67	71	59	63	67	71	59	63	67	71	59	63	67	71
80	1300	MBh	35.1	35.9	38.3	41.0	34.3	35.0	37.4	40.0	33.5	34.2	36.5	39.0	32.6	33.4	35.6	38.1	31.0	31.7	33.9	36.2	28.7	29.4	31.4	33.5
		S/T	0.89	0.84	0.68	0.51	0.93	0.87	0.71	0.53	0.95	0.89	0.73	0.54	1.00	0.92	0.75	0.56	1.00	0.95	0.78	0.58	1.00	0.96	0.78	0.59
		ΔT	22	21	18	15	22	22	19	15	22	22	19	15	23	22	19	15	22	21	19	15	20	20	17	14
		kW	2.40	2.45	2.52	2.59	2.57	2.62	2.70	2.78	2.72	2.77	2.85	2.94	2.85	2.91	2.99	3.09	2.96	3.02	3.11	3.21	3.05	3.12	3.22	3.32
		Amps	8.4	8.6	8.9	9.2	9.1	9.3	9.6	9.9	9.9	10.1	10.4	10.8	10.5	10.8	11.1	11.5	11.2	11.4	11.8	12.2	11.8	12.1	12.5	13.0
		Hi PR	241	260	263	269	273	293	298	304	310	334	338	346	354	380	386	394	382	411	416	426	453	487	493	504
		Lo PR	120	124	135	144	123	127	139	148	127	131	144	153	131	135	147	157	133	138	150	160	137	141	154	164
	1150	MBh	34.1	34.8	37.2	39.8	33.3	34.0	36.3	38.8	32.5	33.2	35.5	37.9	31.7	32.4	**34.6**	37.0	30.1	30.8	32.9	35.1	27.9	28.5	30.4	32.5
		S/T	0.85	0.80	0.65	0.49	0.88	0.83	0.67	0.50	0.91	0.85	0.69	0.52	0.94	0.88	**0.71**	0.53	0.97	0.91	0.74	0.55	0.98	0.92	0.75	0.56
		ΔT	23	22	19	15	24	23	20	16	24	23	20	16	24	23	**20**	16	23	22	19	16	22	21	18	15
		kW	2.38	2.43	2.50	2.57	2.55	2.60	2.68	2.76	2.70	2.75	2.83	2.92	2.83	2.88	**2.97**	3.06	2.94	3.00	3.09	3.19	3.03	3.09	3.19	3.29
		Amps	8.4	8.6	8.8	9.1	9.0	9.2	9.5	9.9	9.8	10.0	10.3	10.7	10.4	10.7	**11.0**	11.4	11.1	11.3	11.7	12.1	11.7	12.0	12.4	12.8
		Hi PR	239	257	261	266	270	291	295	301	307	330	335	343	350	376	**382**	390	378	406	412	421	448	482	489	499
		Lo PR	119	122	133	142	122	126	137	146	126	130	142	151	130	134	**146**	155	132	136	149	158	135	140	152	162
	1000	MBh	31.4	32.1	34.3	36.7	30.7	31.4	33.5	35.8	30.0	30.6	32.7	35.0	29.3	29.9	31.9	34.1	27.8	28.4	30.3	32.4	25.7	26.3	28.1	30.0
		S/T	0.82	0.77	0.63	0.47	0.85	0.80	0.65	0.49	0.87	0.82	0.67	0.50	0.90	0.85	0.69	0.51	0.94	0.88	0.71	0.53	0.94	0.89	0.72	0.54
		ΔT	24	23	20	16	24	23	20	16	24	23	20	16	24	23	20	16	24	23	20	16	22	21	19	15
		kW	2.37	2.41	2.48	2.55	2.53	2.58	2.66	2.74	2.68	2.73	2.81	2.90	2.80	2.86	2.95	3.04	2.91	2.97	3.06	3.16	3.01	3.07	3.16	3.27
		Amps	8.3	8.5	8.7	9.1	8.9	9.1	9.4	9.8	9.7	9.9	10.2	10.6	10.3	10.6	10.9	11.3	11.0	11.2	11.6	12.0	11.6	11.9	12.3	12.7
		Hi PR	237	254	258	264	268	288	292	298	304	327	332	339	347	373	378	386	374	402	408	417	444	477	484	494
		Lo PR	117	121	132	141	121	125	136	145	125	129	141	150	128	132	144	154	131	135	147	157	134	138	151	161
85	1300	MBh	35.7	36.4	38.1	40.7	34.9	35.6	37.2	39.7	34.0	34.7	36.3	38.8	33.2	33.9	35.5	37.8	31.6	32.2	33.7	35.9	29.2	29.8	31.2	33.3
		S/T	0.94	0.90	0.82	0.66	0.97	0.94	0.85	0.69	1.00	0.96	0.87	0.70	1.00	0.99	0.90	0.73	1.00	1.00	0.93	0.75	1.00	1.00	0.94	0.76
		ΔT	24	23	22	19	24	24	22	19	24	24	22	19	23	24	22	19	22	23	22	19	21	21	21	18
		kW	2.40	2.45	2.52	2.59	2.57	2.62	2.70	2.78	2.72	2.77	2.85	2.94	2.85	2.91	2.99	3.09	2.96	3.02	3.11	3.21	3.05	3.12	3.22	3.32
		Amps	8.4	8.6	8.9	9.2	9.1	9.3	9.6	9.9	9.9	10.1	10.4	10.8	10.5	10.8	11.1	11.5	11.2	11.4	11.8	12.2	11.8	12.1	12.5	13.0
		Hi PR	241	260	263	269	273	293	298	304	310	334	338	346	354	380	386	394	382	411	416	426	453	487	493	504
		Lo PR	120	124	135	144	123	127	139	148	127	131	144	153	131	135	147	157	133	138	150	160	137	141	154	164
	1150	MBh	34.7	35.3	37.0	39.5	33.9	34.5	36.1	38.6	33.1	33.7	35.3	37.6	32.2	32.9	34.4	36.7	30.6	31.2	32.7	34.9	28.4	28.9	30.3	32.3
		S/T	0.89	0.86	0.78	0.63	0.93	0.89	0.81	0.65	0.95	0.92	0.83	0.67	0.98	0.95	0.85	0.69	1.00	0.98	0.89	0.72	1.00	0.99	0.89	0.72
		ΔT	25	24	23	20	25	25	23	20	25	25	23	20	25	25	23	20	24	25	23	20	23	23	22	19
		kW	2.38	2.43	2.50	2.57	2.55	2.60	2.68	2.76	2.70	2.75	2.83	2.92	2.83	2.88	2.97	3.06	2.94	3.00	3.09	3.19	3.03	3.09	3.19	3.29
		Amps	8.4	8.6	8.8	9.1	9.0	9.2	9.5	9.9	9.8	10.0	10.3	10.7	10.4	10.7	11.0	11.4	11.1	11.3	11.7	12.1	11.7	12.0	12.4	12.8
		Hi PR	239	257	261	266	270	291	295	301	307	330	335	343	350	376	382	390	378	406	412	421	448	482	489	499
		Lo PR	119	122	133	142	122	126	137	146	126	130	142	151	130	134	146	155	132	136	149	158	135	140	152	162
	1000	MBh	32.0	32.6	34.2	36.4	31.3	31.9	33.4	35.6	30.5	31.1	32.6	34.7	29.8	30.3	31.8	33.9	28.3	28.8	30.2	32.2	26.2	26.7	28.0	29.8
		S/T	0.86	0.83	0.75	0.61	0.89	0.86	0.78	0.63	0.92	0.88	0.80	0.65	0.95	0.91	0.82	0.67	0.98	0.95	0.85	0.69	0.99	0.95	0.86	0.70
		ΔT	25	25	24	20	26	25	24	21	26	25	24	21	26	25	24	21	26	25	24	21	24	23	22	19
		kW	2.37	2.41	2.48	2.55	2.53	2.58	2.66	2.74	2.68	2.73	2.81	2.90	2.80	2.86	2.95	3.04	2.91	2.97	3.06	3.16	3.01	3.07	3.16	3.27
		Amps	8.3	8.5	8.7	9.1	8.9	9.1	9.4	9.8	9.7	9.9	10.2	10.6	10.3	10.6	10.9	11.3	11.0	11.2	11.6	12.0	11.6	11.9	12.3	12.7
		Hi PR	237	254	258	264	268	288	292	298	304	327	332	339	347	373	378	386	374	402	408	417	444	477	484	494
		Lo PR	117	121	132	141	121	125	136	145	125	129	141	150	128	132	144	154	131	135	147	157	134	138	151	161

IDB: Entering Indoor Dry Bulb Temperature

High and low pressures are measured at the liquid and suction service valves.

Shaded area reflects AHRI (TVA) conditions

kW = Total system power

Amps = outdoor unit amps (comp.+fan)

Expanded Cooling Data — SSX140361BA / CA*F3642*6C*

			Outdoor Ambient Temperature																							
			65ºF				75ºF				85ºF				95ºF				105ºF				115ºF			
			Entering Indoor Wet Bulb Temperature																							
IDB	Airflow		59	63	67	71	59	63	67	71	59	63	67	71	59	63	67	71	59	63	67	71	59	63	67	71
70	1353	MBh	34.3	35.6	39.0	-	33.5	34.8	38.1	-	32.7	33.9	37.2	-	31.9	33.1	36.3	-	30.3	31.5	34.5	-	28.1	29.1	31.9	-
		S/T	0.74	0.62	0.43	-	0.77	0.64	0.44	-	0.79	0.66	0.46	-	0.81	0.68	0.47	-	0.84	0.70	0.49	-	0.85	0.71	0.49	-
		ΔT	17	15	11	-	18	15	11	-	18	15	12	-	18	15	12	-	17	15	11	-	16	14	11	-
		kW	2.30	2.35	2.41	-	2.46	2.51	2.59	-	2.61	2.66	2.74	-	2.73	2.79	2.88	-	2.84	2.90	2.99	-	2.93	3.00	3.09	-
		Amps	8.1	8.3	8.6	-	8.8	9.0	9.3	-	9.6	9.8	10.1	-	10.2	10.5	10.8	-	10.9	11.1	11.5	-	11.5	11.8	12.2	-
		Hi PR	227	245	258	-	255	275	290	-	290	312	330	-	331	356	376	-	372	400	423	-	411	442	467	-
		Lo PR	107	114	124	-	113	120	131	-	117	125	136	-	123	131	143	-	129	137	150	-	134	142	155	-
	1200	MBh	33.3	34.6	37.9	-	32.6	33.7	37.0	-	31.8	32.9	36.1	-	31.0	32.1	35.2	-	29.5	30.5	33.5	-	27.3	28.3	31.0	-
		S/T	0.71	0.59	0.41	-	0.73	0.61	0.42	-	0.75	0.63	0.43	-	0.78	0.65	0.45	-	0.80	0.67	0.47	-	0.81	0.68	0.47	-
		ΔT	18	16	12	-	18	16	12	-	18	16	12	-	18	16	12	-	18	16	12	-	17	15	11	-
		kW	2.29	2.33	2.40	-	2.45	2.49	2.57	-	2.59	2.64	2.72	-	2.71	2.77	2.85	-	2.82	2.88	2.97	-	2.91	2.97	3.06	-
		Amps	8.1	8.3	8.5	-	8.7	8.9	9.2	-	9.5	9.7	10.0	-	10.1	10.4	10.7	-	10.8	11.0	11.4	-	11.4	11.7	12.1	-
		Hi PR	225	242	256	-	253	272	287	-	287	309	327	-	327	352	372	-	368	396	418	-	407	438	462	-
		Lo PR	106	113	123	-	112	119	130	-	116	124	135	-	122	130	142	-	128	136	148	-	132	141	154	-
	1052	MBh	30.8	31.9	34.9	-	30.1	31.1	34.1	-	29.3	30.4	33.3	-	28.6	29.7	32.5	-	27.2	28.2	30.9	-	25.2	26.1	28.6	-
		S/T	0.68	0.57	0.39	-	0.71	0.59	0.41	-	0.72	0.60	0.42	-	0.75	0.62	0.43	-	0.78	0.65	0.45	-	0.78	0.65	0.45	-
		ΔT	18	16	12	-	19	16	12	-	19	16	12	-	19	16	12	-	18	16	12	-	17	15	11	-
		kW	2.24	2.28	2.34	-	2.39	2.44	2.51	-	2.53	2.58	2.66	-	2.65	2.70	2.79	-	2.75	2.81	2.90	-	2.84	2.90	2.99	-
		Amps	7.9	8.0	8.3	-	8.5	8.7	9.0	-	9.2	9.4	9.7	-	9.8	10.1	10.4	-	10.5	10.7	11.1	-	11.1	11.3	11.7	-
		Hi PR	218	235	248	-	245	264	279	-	279	300	317	-	318	342	361	-	357	384	406	-	395	425	449	-
		Lo PR	103	109	119	-	108	115	126	-	113	120	131	-	118	126	137	-	124	132	144	-	128	136	149	-
75	1353	MBh	34.92	35.95	38.91	41.76	34.11	35.12	38.01	40.79	33.29	34.28	37.10	39.82	32.48	33.44	36.20	38.85	30.86	31.77	34.39	36.91	28.58	29.43	31.86	34.19
		S/T	0.84	0.75	0.57	0.37	0.87	0.78	0.59	0.38	0.90	0.80	0.61	0.39	0.92	0.83	0.63	0.40	0.96	0.86	0.65	0.42	0.97	0.87	0.65	0.42
		ΔT	20	18	15	10	20	19	15	11	20	19	15	11	20	19	15	11	20	19	15	10	19	17	14	10
		kW	2.32	2.36	2.43	2.51	2.48	2.53	2.61	2.69	2.63	2.68	2.76	2.85	2.76	2.81	2.90	2.99	2.86	2.92	3.01	3.11	2.96	3.02	3.11	3.21
		Amps	8.2	8.4	8.7	9.0	8.9	9.1	9.4	9.7	9.6	9.9	10.2	10.6	10.3	10.5	10.9	11.3	11.0	11.2	11.6	12.0	11.6	11.9	12.3	12.8
		Hi PR	230	247	261	272	258	277	293	306	293	316	333	348	334	359	380	396	376	404	427	445	415	447	472	492
		Lo PR	108	115	125	133	114	121	132	141	118	126	138	147	124	132	145	154	130	139	151	161	135	144	157	167
	1200	MBh	33.9	34.9	37.8	40.5	33.1	34.1	36.9	39.6	32.3	33.3	36.0	38.7	31.5	**32.5**	35.1	37.7	30.0	30.8	33.4	35.8	27.8	28.6	30.9	33.2
		S/T	0.80	0.72	0.54	0.35	0.83	0.74	0.56	0.36	0.85	0.76	0.58	0.37	0.88	**0.79**	0.60	0.38	0.91	0.82	0.62	0.40	0.92	0.83	0.62	0.40
		ΔT	21	19	16	11	21	19	16	11	21	19	16	11	21	**20**	16	11	21	19	16	11	20	18	15	10
		kW	2.30	2.35	2.42	2.49	2.46	2.51	2.59	2.67	2.61	2.66	2.74	2.83	2.73	**2.79**	2.88	2.97	2.84	2.90	2.99	3.08	2.93	3.00	3.09	3.19
		Amps	8.1	8.3	8.6	8.9	8.8	9.0	9.3	9.6	9.6	9.8	10.1	10.5	10.2	**10.5**	10.8	11.2	10.9	11.1	11.5	11.9	11.5	11.8	12.2	12.6
		Hi PR	228	245	259	270	255	275	290	303	290	312	330	344	331	**356**	376	392	372	400	423	441	411	442	467	487
		Lo PR	107	114	124	132	113	120	131	140	117	125	136	145	123	**131**	143	152	129	137	150	160	134	142	155	165
	1052	MBh	31.3	32.2	34.9	37.4	30.6	31.5	34.1	36.6	29.8	30.7	33.2	35.7	29.1	30.0	32.4	34.8	27.7	28.5	30.8	33.1	25.6	26.4	28.5	30.6
		S/T	0.77	0.69	0.52	0.34	0.80	0.72	0.54	0.35	0.82	0.74	0.56	0.36	0.85	0.76	0.58	0.37	0.88	0.79	0.60	0.38	0.89	0.80	0.60	0.39
		ΔT	21	20	16	11	21	20	16	11	21	20	16	11	22	20	16	11	21	20	16	11	20	18	15	10
		kW	2.25	2.30	2.36	2.43	2.41	2.46	2.53	2.61	2.55	2.60	2.68	2.76	2.67	2.73	2.81	2.90	2.78	2.83	2.92	3.01	2.86	2.92	3.02	3.11
		Amps	7.9	8.1	8.4	8.7	8.6	8.8	9.1	9.4	9.3	9.5	9.8	10.2	9.9	10.2	10.5	10.9	10.6	10.8	11.2	11.6	11.2	11.5	11.8	12.3
		Hi PR	221	237	251	262	248	266	281	293	282	303	320	334	321	345	365	380	361	388	410	428	399	429	453	473
		Lo PR	104	110	120	128	109	116	127	135	114	121	132	141	120	127	139	148	125	133	145	155	130	138	150	160

IDB: Entering Indoor Dry Bulb Temperature

High and low pressures are measured at the liquid and suction service valves.

Shaded area reflects ACCA (TVA) conditions

kW = Total system power

Amps = outdoor unit amps (comp.+fan)

Expanded Cooling Data — SSX140361BA / CA*F3642*6C* (cont.)

			Outdoor Ambient Temperature																							
			65ºF				75ºF				85ºF				95ºF				105ºF				115ºF			
			Entering Indoor Wet Bulb Temperature																							
IDB	Airflow		59	63	67	71	59	63	67	71	59	63	67	71	59	63	67	71	59	63	67	71	59	63	67	71
80	1353	MBh	35.54	36.31	38.80	41.47	34.71	35.47	37.90	40.51	33.89	34.63	36.99	39.55	33.06	33.78	36.09	38.58	31.41	32.09	34.29	36.65	29.09	29.73	31.76	33.95
		S/T	0.92	0.87	0.71	0.53	0.96	0.90	0.73	0.55	1.00	0.92	0.75	0.56	1.00	0.95	0.77	0.58	1.00	1.00	0.80	0.60	1.00	1.00	0.81	0.61
		ΔT	22	21	19	15	23	22	19	15	23	22	19	15	22	22	19	15	21	22	19	15	20	20	17	14
		kW	2.34	2.38	2.45	2.52	2.50	2.55	2.63	2.71	2.65	2.70	2.78	2.87	2.78	2.83	2.92	3.01	2.89	2.95	3.04	3.13	2.98	3.04	3.14	3.24
		Amps	8.3	8.5	8.8	9.1	9.0	9.2	9.5	9.8	9.7	10.0	10.3	10.7	10.4	10.6	11.0	11.4	11.1	11.3	11.7	12.2	11.7	12.0	12.4	12.9
		Hi PR	232	250	264	275	260	280	296	309	296	319	337	351	337	363	383	400	380	408	431	450	419	451	477	497
		Lo PR	109	116	127	135	115	123	134	142	120	127	139	148	126	134	146	155	132	140	153	163	136	145	158	169
	1200	MBh	34.5	35.3	37.7	40.3	33.7	34.4	36.8	39.3	32.9	33.6	35.9	38.4	32.1	32.8	**35.0**	37.5	30.5	31.2	33.3	35.6	28.2	28.9	30.8	33.0
		S/T	0.88	0.83	0.67	0.50	0.91	0.86	0.70	0.52	0.94	0.88	0.71	0.53	0.97	0.91	**0.74**	0.55	1.00	0.94	0.77	0.57	1.00	0.95	0.77	0.58
		ΔT	23	22	19	16	24	23	20	16	24	23	20	16	24	23	**20**	16	23	22	20	16	22	21	18	15
		kW	2.32	2.36	2.43	2.51	2.48	2.53	2.61	2.69	2.63	2.68	2.76	2.85	2.76	2.81	**2.90**	2.99	2.86	2.92	3.01	3.11	2.96	3.02	3.11	3.21
		Amps	8.2	8.4	8.7	9.0	8.9	9.1	9.4	9.7	9.6	9.9	10.2	10.6	10.3	10.6	**10.9**	11.3	11.0	11.2	11.6	12.0	11.6	11.9	12.3	12.8
		Hi PR	230	247	261	272	258	278	293	306	293	316	333	348	334	359	**380**	396	376	404	427	445	415	447	472	492
		Lo PR	108	115	125	133	114	121	132	141	118	126	138	147	124	132	**145**	154	130	139	151	161	135	144	157	167
	1052	MBh	31.8	32.5	34.8	37.2	31.1	31.8	34.0	36.3	30.4	31.0	33.1	35.4	29.6	30.3	32.3	34.6	28.1	28.8	30.7	32.8	26.1	26.6	28.5	30.4
		S/T	0.85	0.80	0.65	0.48	0.88	0.83	0.67	0.50	0.90	0.85	0.69	0.52	0.93	0.87	0.71	0.53	0.97	0.91	0.74	0.55	0.98	0.91	0.74	0.56
		ΔT	24	23	20	16	24	23	20	16	24	23	20	16	24	23	20	16	24	23	20	16	22	21	19	15
		kW	2.27	2.31	2.38	2.45	2.43	2.48	2.55	2.63	2.57	2.62	2.70	2.78	2.69	2.75	2.83	2.92	2.80	2.85	2.94	3.04	2.89	2.95	3.04	3.14
		Amps	8.0	8.2	8.5	8.8	8.6	8.8	9.1	9.5	9.4	9.6	9.9	10.3	10.0	10.3	10.6	11.0	10.7	10.9	11.3	11.7	11.3	11.6	11.9	12.4
		Hi PR	223	240	253	264	250	269	284	296	284	306	323	337	324	349	368	384	365	392	414	432	403	433	458	477
		Lo PR	105	111	122	129	111	118	128	137	115	122	133	142	121	128	140	149	127	135	147	157	131	139	152	162
85	1353	MBh	36.16	36.86	38.60	41.18	35.32	36.00	37.71	40.23	34.48	35.14	36.81	39.27	33.64	34.29	35.91	38.31	31.95	32.57	34.11	36.40	29.60	30.17	31.60	33.71
		S/T	0.97	0.93	0.84	0.68	1.00	0.97	0.87	0.71	1.00	0.99	0.90	0.73	1.00	1.00	0.93	0.75	1.00	1.00	0.96	0.78	1.00	1.00	0.97	0.79
		ΔT	24	23	22	19	24	24	22	19	23	24	22	19	23	23	23	20	22	22	22	19	20	21	21	18
		kW	2.35	2.40	2.47	2.54	2.52	2.57	2.65	2.73	2.67	2.72	2.81	2.89	2.80	2.86	2.94	3.04	2.91	2.97	3.06	3.16	3.00	3.07	3.16	3.27
		Amps	8.4	8.6	8.8	9.2	9.0	9.3	9.6	9.9	9.8	10.1	10.4	10.8	10.5	10.7	11.1	11.5	11.2	11.4	11.8	12.3	11.8	12.1	12.5	13.0
		Hi PR	234	252	266	278	263	283	299	312	299	322	340	355	341	367	387	404	383	413	436	454	424	456	481	502
		Lo PR	110	117	128	136	116	124	135	144	121	129	140	150	127	135	147	157	133	142	155	165	138	146	160	170
	1200	MBh	35.1	35.8	37.5	40.0	34.3	35.0	36.6	39.1	33.5	34.1	35.7	38.1	32.7	33.3	34.9	37.2	31.0	31.6	33.1	35.3	28.7	29.3	30.7	32.7
		S/T	0.92	0.89	0.80	0.65	0.96	0.92	0.83	0.68	0.98	0.95	0.85	0.69	1.00	0.98	0.88	0.72	1.00	1.00	0.92	0.74	1.00	1.00	0.92	0.75
		ΔT	25	24	23	20	25	25	23	20	25	25	23	20	25	25	24	20	24	24	23	20	22	22	22	19
		kW	2.34	2.38	2.45	2.52	2.50	2.55	2.63	2.71	2.65	2.70	2.78	2.87	2.78	2.83	2.92	3.01	2.89	2.95	3.04	3.13	2.98	3.04	3.14	3.24
		Amps	8.3	8.5	8.8	9.1	9.0	9.2	9.5	9.8	9.7	10.0	10.3	10.7	10.4	10.6	11.0	11.4	11.1	11.3	11.7	12.2	11.7	12.0	12.4	12.9
		Hi PR	232	250	264	275	260	280	296	309	296	319	337	351	337	363	383	400	380	408	431	450	419	451	477	497
		Lo PR	109	116	127	135	115	123	134	142	120	127	139	148	126	134	146	155	132	140	153	163	136	145	158	169
	1052	MBh	32.4	33.0	34.6	36.9	31.6	32.3	33.8	36.0	30.9	31.5	33.0	35.2	30.1	30.7	32.2	34.3	28.6	29.2	30.6	32.6	26.5	27.0	28.3	30.2
		S/T	0.89	0.86	0.78	0.63	0.92	0.89	0.80	0.65	0.95	0.91	0.82	0.67	0.98	0.94	0.85	0.69	1.00	0.98	0.88	0.72	1.00	0.99	0.89	0.72
		ΔT	25	25	23	20	26	25	24	21	26	25	24	21	26	25	24	21	25	25	24	20	23	23	22	19
		kW	2.29	2.33	2.40	2.47	2.45	2.49	2.57	2.65	2.59	2.64	2.72	2.80	2.71	2.77	2.85	2.94	2.82	2.88	2.97	3.06	2.91	2.97	3.06	3.16
		Amps	8.1	8.3	8.5	8.8	8.7	8.9	9.2	9.6	9.5	9.7	10.0	10.4	10.1	10.4	10.7	11.1	10.8	11.0	11.4	11.8	11.4	11.7	12.1	12.5
		Hi PR	225	242	256	267	253	272	287	299	287	309	327	341	327	352	372	388	368	396	418	436	407	438	462	482
		Lo PR	106	112	123	131	112	119	130	138	116	124	135	144	122	130	142	151	128	136	148	158	132	141	154	164

IDB: Entering Indoor Dry Bulb Temperature

High and low pressures are measured at the liquid and suction service valves.

Shaded area reflects AHRI (TVA) conditions

kW = Total system power

Amps = outdoor unit amps (comp.+fan)

Expanded Cooling Data — SSX140421B* / CA*F4860C6A* / .074 Orifice

			Outdoor Ambient Temperature																							
			65ºF				75ºF				85ºF				95ºF				105ºF				115ºF			
			Entering Indoor Wet Bulb Temperature																							
IDB	Airflow		59	63	67	71	59	63	67	71	59	63	67	71	59	63	67	71	59	63	67	71	59	63	67	71
70	1406	MBh	39.2	40.6	44.5	-	38.3	39.7	43.5	-	37.4	38.7	42.4	-	36.5	37.8	41.4	-	34.6	35.9	39.3	-	32.1	33.3	36.4	-
		S/T	0.71	0.60	0.41	-	0.74	0.62	0.43	-	0.76	0.63	0.44	-	0.78	0.65	0.45	-	0.81	0.68	0.47	-	0.82	0.68	0.47	-
		ΔT	18	16	12	-	19	16	12	-	19	16	12	-	19	16	12	-	18	16	12	-	17	15	11	-
		kW	2.71	2.77	2.85	-	2.91	2.96	3.05	-	3.07	3.13	3.23	-	3.22	3.29	3.39	-	3.35	3.42	3.52	-	3.46	3.53	3.64	-
		Amps	9.9	10.1	10.4	-	10.6	10.9	11.2	-	11.5	11.8	12.2	-	12.3	12.6	13.0	-	13.0	13.4	13.8	-	13.8	14.1	14.6	-
		Hi PR	228	245	249	-	258	277	281	-	293	315	320	-	334	359	364	-	375	404	409	-	420	452	459	-
		Lo PR	118	121	133	-	121	125	137	-	125	129	141	-	129	133	145	-	131	135	148	-	134	139	151	-
	1250	MBh	38.1	39.4	43.2	-	37.2	38.5	42.2	-	36.3	37.6	41.2	-	35.4	36.7	40.2	-	33.6	34.9	38.2	-	31.2	32.3	35.4	-
		S/T	0.68	0.57	0.39	-	0.71	0.59	0.41	-	0.72	0.60	0.42	-	0.75	0.62	0.43	-	0.78	0.65	0.45	-	0.78	0.65	0.45	-
		ΔT	19	16	13	-	19	17	13	-	19	17	13	-	19	17	13	-	19	17	13	-	18	16	12	-
		kW	2.70	2.75	2.83	-	2.88	2.94	3.03	-	3.05	3.11	3.20	-	3.20	3.26	3.36	-	3.32	3.39	3.49	-	3.43	3.50	3.61	-
		Amps	9.8	10.0	10.3	-	10.5	10.8	11.1	-	11.4	11.7	12.1	-	12.2	12.5	12.9	-	12.9	13.2	13.7	-	13.7	14.0	14.5	-
		Hi PR	226	243	246	-	255	274	278	-	290	312	316	-	330	355	360	-	372	400	405	-	416	448	454	-
		Lo PR	117	120	131	-	120	124	135	-	124	128	140	-	127	131	144	-	130	134	146	-	133	137	150	-
	1094	MBh	35.1	36.4	39.9	-	34.3	35.6	39.0	-	33.5	34.7	38.0	-	32.7	33.9	37.1	-	31.0	32.2	35.2	-	28.8	29.8	32.7	-
		S/T	0.66	0.55	0.38	-	0.68	0.57	0.39	-	0.70	0.58	0.40	-	0.72	0.60	0.42	-	0.75	0.62	0.43	-	0.75	0.63	0.44	-
		ΔT	19	17	13	-	20	17	13	-	20	17	13	-	20	17	13	-	19	17	13	-	18	16	12	-
		kW	2.68	2.73	2.81	-	2.86	2.92	3.00	-	3.03	3.09	3.18	-	3.17	3.24	3.33	-	3.30	3.36	3.47	-	3.40	3.47	3.58	-
		Amps	9.7	9.9	10.2	-	10.4	10.7	11.0	-	11.3	11.6	11.9	-	12.1	12.3	12.7	-	12.8	13.1	13.5	-	13.6	13.9	14.3	-
		Hi PR	223	240	244	-	253	272	275	-	287	309	313	-	327	352	357	-	368	396	401	-	412	443	449	-
		Lo PR	115	119	130	-	119	123	134	-	123	127	138	-	126	130	142	-	129	133	145	-	132	136	148	-
75	1406	MBh	39.9	41.0	44.4	47.7	38.9	40.1	43.4	46.6	38.0	39.1	42.4	45.5	37.1	**38.2**	41.3	44.4	35.2	36.3	39.3	42.1	32.6	33.6	36.4	39.0
		S/T	0.81	0.73	0.55	0.35	0.84	0.75	0.57	0.37	0.86	0.77	0.58	0.38	0.89	**0.80**	0.60	0.39	0.92	0.83	0.63	0.40	0.93	0.83	0.63	0.41
		ΔT	21	19	16	11	21	20	16	11	21	20	16	11	22	**20**	16	11	21	20	16	11	20	18	15	10
		kW	2.71	2.77	2.85	2.93	2.91	2.96	3.05	3.14	3.07	3.13	3.23	3.33	3.22	**3.29**	3.39	3.49	3.35	3.42	3.52	3.63	3.46	3.53	3.64	3.75
		Amps	9.9	10.1	10.4	10.8	10.6	10.9	11.2	11.6	11.5	11.8	12.2	12.6	12.3	**12.6**	13.0	13.5	13.0	13.4	13.8	14.3	13.8	14.1	14.6	15.1
		Hi PR	228	245	249	254	258	277	281	287	293	315	320	327	334	**359**	364	372	375	404	409	418	420	452	459	469
		Lo PR	118	121	133	141	121	125	137	145	125	129	141	150	129	**133**	145	154	131	135	148	157	134	139	151	161
	1250	MBh	38.7	39.8	43.1	46.3	37.8	38.9	42.1	45.2	36.9	38.0	41.1	44.1	36.0	**37.1**	40.1	43.1	34.2	35.2	38.1	40.9	31.7	32.6	35.3	37.9
		S/T	0.77	0.69	0.52	0.34	0.80	0.72	0.54	0.35	0.82	0.74	0.56	0.36	0.85	**0.76**	0.57	0.37	0.88	0.79	0.60	0.38	0.89	0.79	0.60	0.39
		ΔT	22	20	17	11	22	21	17	12	22	21	17	12	22	**21**	17	12	22	20	17	12	21	19	16	11
		kW	2.70	2.75	2.83	2.91	2.88	2.94	3.03	3.12	3.05	3.11	3.20	3.30	3.20	**3.26**	3.36	3.47	3.32	3.39	3.49	3.60	3.43	3.50	3.61	3.72
		Amps	9.8	10.0	10.3	10.7	10.5	10.8	11.1	11.5	11.4	11.7	12.1	12.5	12.2	**12.5**	12.9	13.3	12.9	13.2	13.7	14.2	13.7	14.0	14.5	15.0
		Hi PR	226	243	246	251	255	274	278	284	290	312	316	323	330	**355**	360	368	372	400	405	414	416	448	454	464
		Lo PR	117	120	131	140	120	124	135	144	124	128	140	149	127	**131**	144	153	130	134	146	156	133	137	150	160
	1094	MBh	35.7	36.8	39.8	42.7	34.9	35.9	38.9	41.7	34.1	35.1	38.0	40.7	33.2	**34.2**	37.0	39.7	31.6	32.5	35.2	37.8	29.2	30.1	32.6	35.0
		S/T	0.75	0.67	0.51	0.32	0.77	0.69	0.52	0.34	0.79	0.71	0.54	0.35	0.82	**0.73**	0.55	0.36	0.85	0.76	0.58	0.37	0.86	0.77	0.58	0.37
		ΔT	22	21	17	12	23	21	17	12	23	21	17	12	23	**21**	17	12	23	21	17	12	21	19	16	11
		kW	2.68	2.73	2.81	2.89	2.86	2.92	3.00	3.09	3.03	3.09	3.18	3.28	3.17	**3.24**	3.33	3.44	3.30	3.36	3.47	3.58	3.40	3.47	3.58	3.69
		Amps	9.7	9.9	10.2	10.6	10.4	10.7	11.0	11.4	11.3	11.6	11.9	12.4	12.1	**12.3**	12.7	13.2	12.8	13.1	13.5	14.0	13.6	13.9	14.3	14.9
		Hi PR	223	240	244	249	253	272	275	281	287	309	313	320	327	**352**	357	365	368	396	401	410	412	443	449	459
		Lo PR	115	119	130	138	119	123	134	143	123	127	138	147	126	**130**	142	151	129	133	145	154	132	136	148	158

IDB: Entering Indoor Dry Bulb Temperature

High and low pressures are measured at the liquid and suction service valves.

Shaded area reflects ACCA (TVA) conditions

kW = Total system power

Amps = outdoor unit amps (comp.+fan)

Expanded Cooling Data — SSX140421B* / CA*F4860C6A* / .074 Orifice (cont.)

			Outdoor Ambient Temperature																							
			65ºF				75ºF				85ºF				95ºF				105ºF				115ºF			
			Entering Indoor Wet Bulb Temperature																							
IDB	Airflow		59	63	67	71	59	63	67	71	59	63	67	71	59	63	67	71	59	63	67	71	59	63	67	71
80	1406	MBh	40.6	41.5	44.3	47.3	39.6	40.5	43.3	46.2	38.7	39.5	42.2	45.1	37.7	38.6	41.2	44.0	35.9	36.6	39.1	41.8	33.2	33.9	36.3	38.8
		S/T	0.89	0.83	0.68	0.51	0.92	0.86	0.70	0.53	0.95	0.89	0.72	0.54	1.00	0.92	0.75	0.56	1.00	0.95	0.77	0.58	1.00	0.96	0.78	0.58
		ΔT	24	23	20	16	24	23	20	16	24	23	20	16	25	23	20	16	23	23	20	16	22	21	18	15
		kW	2.71	2.77	2.85	2.93	2.91	2.96	3.05	3.14	3.07	3.13	3.23	3.33	3.22	3.29	3.39	3.49	3.35	3.42	3.52	3.63	3.46	3.53	3.64	3.75
		Amps	9.9	10.1	10.4	10.8	10.6	10.9	11.2	11.6	11.5	11.8	12.2	12.6	12.3	12.6	13.0	13.5	13.0	13.4	13.8	14.3	13.8	14.1	14.6	15.1
		Hi PR	228	245	249	254	258	277	281	287	293	315	320	327	334	359	364	372	375	404	409	418	420	452	459	469
		Lo PR	118	121	133	141	121	125	137	145	125	129	141	150	129	133	145	154	131	135	148	157	134	139	151	161
	1250	MBh	39.4	40.2	43.0	46.0	38.5	39.3	42.0	44.9	37.6	38.4	41.0	43.8	36.6	37.4	**40.0**	42.8	34.8	35.6	38.0	40.6	32.2	32.9	35.2	37.6
		S/T	0.85	0.80	0.65	0.48	0.88	0.82	0.67	0.50	0.90	0.85	0.69	0.51	0.93	0.87	**0.71**	0.53	0.97	0.91	0.74	0.55	0.97	0.91	0.74	0.56
		ΔT	25	24	20	16	25	24	21	17	25	24	21	17	25	24	**21**	17	25	24	21	16	23	22	19	15
		kW	2.70	2.75	2.83	2.91	2.88	2.94	3.03	3.12	3.05	3.11	3.20	3.30	3.20	3.26	**3.36**	3.47	3.32	3.39	3.49	3.60	3.43	3.50	3.61	3.72
		Amps	9.8	10.0	10.3	10.7	10.5	10.8	11.1	11.5	11.4	11.7	12.1	12.5	12.2	12.5	**12.9**	13.3	12.9	13.2	13.7	14.2	13.7	14.0	14.5	15.0
		Hi PR	226	243	246	251	255	274	278	284	290	312	316	323	330	355	**360**	368	372	400	405	414	416	448	454	464
		Lo PR	117	120	131	140	120	124	135	144	124	128	140	149	127	131	**144**	153	130	134	146	156	133	137	150	160
	1094	MBh	36.4	37.1	39.7	42.4	35.5	36.3	38.8	41.4	34.7	35.4	37.8	40.5	33.8	34.6	36.9	39.5	32.1	32.8	35.1	37.5	29.8	30.4	32.5	34.7
		S/T	0.82	0.77	0.62	0.47	0.85	0.80	0.65	0.48	0.87	0.82	0.66	0.50	0.90	0.84	0.69	0.51	0.93	0.87	0.71	0.53	0.94	0.88	0.72	0.54
		ΔT	25	24	21	17	25	24	21	17	25	24	21	17	26	24	21	17	25	24	21	17	24	23	20	16
		kW	2.68	2.73	2.81	2.89	2.86	2.92	3.00	3.09	3.03	3.09	3.18	3.28	3.17	3.24	3.33	3.44	3.30	3.36	3.47	3.58	3.40	3.47	3.58	3.69
		Amps	9.7	9.9	10.2	10.6	10.4	10.7	11.0	11.4	11.3	11.6	11.9	12.4	12.1	12.3	12.7	13.2	12.8	13.1	13.5	14.0	13.6	13.9	14.3	14.9
		Hi PR	223	240	244	249	253	272	275	281	287	309	313	320	327	352	357	365	368	396	401	410	412	443	449	459
		Lo PR	115	119	130	138	119	123	134	143	123	127	138	147	126	130	142	151	129	133	145	154	132	136	148	158
85	1406	MBh	41.3	42.1	44.1	47.0	40.3	41.1	43.0	45.9	39.4	40.1	42.0	44.8	38.4	39.1	41.0	43.7	36.5	37.2	38.9	41.5	33.8	34.4	36.1	38.5
		S/T	0.93	0.90	0.81	0.66	0.97	0.93	0.84	0.68	0.99	0.96	0.86	0.70	1.00	0.99	0.89	0.72	1.00	1.00	0.92	0.75	1.00	1.00	0.93	0.76
		ΔT	25	25	23	20	25	25	24	21	26	25	24	21	25	25	24	21	24	24	24	20	22	23	22	19
		kW	2.71	2.77	2.85	2.93	2.91	2.96	3.05	3.14	3.07	3.13	3.23	3.33	3.22	3.29	3.39	3.49	3.35	3.42	3.52	3.63	3.46	3.53	3.64	3.75
		Amps	9.9	10.1	10.4	10.8	10.6	10.9	11.2	11.6	11.5	11.8	12.2	12.6	12.3	12.6	13.0	13.5	13.0	13.4	13.8	14.3	13.8	14.1	14.6	15.1
		Hi PR	228	245	249	254	258	277	281	287	293	315	320	327	334	359	364	372	375	404	409	418	420	452	459	469
		Lo PR	118	121	133	141	121	125	137	145	125	129	141	150	129	133	145	154	131	135	148	157	134	139	151	161
	1250	MBh	40.1	40.9	42.8	45.6	39.1	39.9	41.8	44.6	38.2	39.0	40.8	43.5	37.3	38.0	39.8	42.5	35.4	36.1	37.8	40.3	32.8	33.4	35.0	37.4
		S/T	0.89	0.86	0.77	0.63	0.92	0.89	0.80	0.65	0.95	0.91	0.82	0.67	0.98	0.94	0.85	0.69	1.00	0.98	0.88	0.72	1.00	0.99	0.89	0.72
		ΔT	26	26	24	21	27	26	25	21	27	26	25	21	27	26	25	22	26	26	25	21	24	24	23	20
		kW	2.70	2.75	2.83	2.91	2.88	2.94	3.03	3.12	3.05	3.11	3.20	3.30	3.20	3.26	3.36	3.47	3.32	3.39	3.49	3.60	3.43	3.50	3.61	3.72
		Amps	9.8	10.0	10.3	10.7	10.5	10.8	11.1	11.5	11.4	11.7	12.1	12.5	12.2	12.5	12.9	13.3	12.9	13.2	13.7	14.2	13.7	14.0	14.5	15.0
		Hi PR	226	243	246	251	255	274	278	284	290	312	316	323	330	355	360	368	372	400	405	414	416	448	454	464
		Lo PR	117	120	131	140	120	124	135	144	124	128	140	149	127	131	144	153	130	134	146	156	133	137	150	160
	1094	MBh	37.0	37.7	39.5	42.1	36.1	36.8	38.6	41.2	35.3	36.0	37.7	40.2	34.4	35.1	36.7	39.2	32.7	33.3	34.9	37.2	30.3	30.9	32.3	34.5
		S/T	0.86	0.83	0.75	0.61	0.89	0.86	0.77	0.63	0.91	0.88	0.79	0.64	0.94	0.91	0.82	0.66	0.98	0.94	0.85	0.69	0.98	0.95	0.86	0.70
		ΔT	27	26	25	21	27	27	25	22	27	27	25	22	27	27	25	22	27	26	25	22	25	25	23	20
		kW	2.68	2.73	2.81	2.89	2.86	2.92	3.00	3.09	3.03	3.09	3.18	3.28	3.17	3.24	3.33	3.44	3.30	3.36	3.47	3.58	3.40	3.47	3.58	3.69
		Amps	9.7	9.9	10.2	10.6	10.4	10.7	11.0	11.4	11.3	11.6	11.9	12.4	12.1	12.3	12.7	13.2	12.8	13.1	13.5	14.0	13.6	13.9	14.3	14.9
		Hi PR	223	240	244	249	253	272	275	281	287	309	313	320	327	352	357	365	368	396	401	410	412	443	449	459
		Lo PR	115	119	130	138	119	123	134	143	123	127	138	147	126	130	142	151	129	133	145	154	132	136	148	158

IDB: Entering Indoor Dry Bulb Temperature

High and low pressures are measured at the liquid and suction service valves.

Shaded area reflects AHRI (TVA) conditions

kW = Total system power

Amps = outdoor unit amps (comp.+fan)

Expanded Cooling Data — SSX140421CA / CA*F4860*6B*

			Outdoor Ambient Temperature																							
			65ºF				75ºF				85ºF				95ºF				105ºF				115ºF			
			Entering Indoor Wet Bulb Temperature																							
IDB	Airflow		59	63	67	71	59	63	67	71	59	63	67	71	59	63	67	71	59	63	67	71	59	63	67	71
70	1225	MBh	35.1	36.4	39.9	-	34.3	35.6	39.0	-	33.5	34.7	38.0	-	32.7	33.9	37.1	-	31.0	32.2	35.2	-	28.8	29.8	32.7	-
		S/T	0.69	0.58	0.40	-	0.72	0.60	0.41	-	0.73	0.61	0.42	-	0.76	0.63	0.44	-	0.79	0.66	0.46	-	0.79	0.66	0.46	-
		ΔT	18	16	12	-	18	16	12	-	18	16	12	-	19	16	12	-	18	16	12	-	17	15	11	-
		kW	2.06	2.11	2.18	-	2.23	2.29	2.37	-	2.39	2.45	2.53	-	2.52	2.59	2.68	-	2.64	2.70	2.80	-	2.74	2.81	2.91	-
		Amps	8.8	9.0	9.3	-	9.5	9.7	10.0	-	10.3	10.5	10.9	-	11.0	11.3	11.6	-	11.7	12.0	12.4	-	12.4	12.7	13.1	-
		Hi PR	224	242	255	-	252	271	286	-	286	308	326	-	326	351	371	-	367	395	417	-	406	436	461	-
		Lo PR	108	114	125	-	114	121	132	-	118	126	137	-	124	132	144	-	130	138	151	-	134	143	156	-
	1450	MBh	38.1	39.4	43.2	-	37.2	38.5	42.2	-	36.3	37.6	41.2	-	35.4	36.7	40.2	-	33.6	34.9	38.2	-	31.2	32.3	35.4	-
		S/T	0.72	0.60	0.41	-	0.74	0.62	0.43	-	0.76	0.64	0.44	-	0.79	0.66	0.45	-	0.82	0.68	0.47	-	0.82	0.69	0.48	-
		ΔT	17	15	11	-	18	15	11	-	18	15	12	-	18	15	12	-	17	15	11	-	16	14	11	-
		kW	2.11	2.16	2.24	-	2.29	2.35	2.43	-	2.45	2.51	2.60	-	2.60	2.66	2.75	-	2.71	2.78	2.88	-	2.82	2.89	2.99	-
		Amps	9.0	9.2	9.5	-	9.7	10.0	10.3	-	10.6	10.8	11.2	-	11.3	11.6	12.0	-	12.0	12.3	12.7	-	12.8	13.1	13.5	-
		Hi PR	231	249	263	-	260	279	295	-	295	318	336	-	336	362	382	-	378	407	430	-	418	450	475	-
		Lo PR	111	118	129	-	117	125	136	-	122	129	141	-	128	136	148	-	134	143	156	-	139	147	161	-
	1575	MBh	38.4	39.8	43.6	-	37.5	38.9	42.6	-	36.6	38.0	41.6	-	35.8	37.1	40.6	-	34.0	35.2	38.6	-	31.5	32.6	35.7	-
		S/T	0.73	0.61	0.42	-	0.76	0.63	0.44	-	0.78	0.65	0.45	-	0.80	0.67	0.46	-	0.83	0.69	0.48	-	0.84	0.70	0.49	-
		ΔT	16	14	11	-	17	14	11	-	17	14	11	-	17	14	11	-	16	14	11	-	15	13	10	-
		kW	2.12	2.17	2.25	-	2.30	2.36	2.44	-	2.46	2.52	2.61	-	2.60	2.67	2.76	-	2.72	2.79	2.89	-	2.83	2.89	3.00	-
		Amps	9.0	9.2	9.6	-	9.8	10.0	10.3	-	10.6	10.9	11.2	-	11.3	11.6	12.0	-	12.1	12.4	12.8	-	12.8	13.1	13.6	-
		Hi PR	232	250	264	-	260	280	296	-	296	319	337	-	337	363	383	-	380	408	431	-	419	451	476	-
		Lo PR	111	118	129	-	117	125	136	-	122	130	142	-	128	136	149	-	134	143	156	-	139	148	161	-
75	1225	MBh	35.7	36.8	39.8	42.7	34.9	35.9	38.9	41.7	34.1	35.1	38.0	40.7	33.2	**34.2**	37.0	39.7	31.6	32.5	35.2	37.8	29.2	30.1	32.6	35.0
		S/T	0.79	0.70	0.53	0.34	0.81	0.73	0.55	0.35	0.83	0.75	0.56	0.36	0.86	**0.77**	0.58	0.38	0.89	0.80	0.61	0.39	0.90	0.81	0.61	0.39
		ΔT	21	19	16	11	21	20	16	11	21	20	16	11	21	**20**	16	11	21	20	16	11	20	18	15	10
		kW	2.08	2.13	2.20	2.28	2.25	2.31	2.39	2.47	2.41	2.47	2.56	2.65	2.55	**2.61**	2.70	2.80	2.67	2.73	2.83	2.93	2.77	2.83	2.94	3.04
		Amps	8.8	9.1	9.4	9.7	9.6	9.8	10.1	10.5	10.4	10.6	11.0	11.4	11.1	**11.4**	11.8	12.2	11.8	12.1	12.5	13.0	12.5	12.8	13.3	13.8
		Hi PR	227	244	258	269	254	274	289	302	289	311	329	343	330	**355**	375	391	371	399	421	439	410	441	466	486
		Lo PR	109	116	126	134	115	122	133	142	119	127	139	148	125	**133**	145	155	131	140	152	162	136	144	158	168
	1450	MBh	38.7	39.8	43.1	46.3	37.8	38.9	42.1	45.2	36.9	38.0	41.1	44.1	36.0	**37.1**	40.1	43.1	34.2	35.2	38.1	40.9	31.7	32.6	35.3	37.9
		S/T	0.81	0.73	0.55	0.35	0.84	0.76	0.57	0.37	0.87	0.77	0.59	0.38	0.89	**0.80**	0.60	0.39	0.93	0.83	0.63	0.40	0.94	0.84	0.63	0.41
		ΔT	20	18	15	10	20	19	15	11	20	19	15	11	20	**19**	15	11	20	19	15	10	19	17	14	10
		kW	2.13	2.18	2.26	2.34	2.32	2.37	2.45	2.54	2.48	2.54	2.63	2.72	2.62	**2.68**	2.78	2.88	2.74	2.81	2.91	3.01	2.84	2.91	3.02	3.13
		Amps	9.1	9.3	9.6	10.0	9.8	10.1	10.4	10.8	10.7	10.9	11.3	11.7	11.4	**11.7**	12.1	12.5	12.2	12.5	12.9	13.4	12.9	13.2	13.6	14.2
		Hi PR	234	252	266	277	262	282	298	311	298	321	339	354	340	**366**	386	403	382	411	434	453	422	454	480	501
		Lo PR	112	119	130	138	118	126	137	146	123	131	143	152	129	**137**	150	160	135	144	157	167	140	149	163	173
	1575	MBh	39.1	40.2	43.6	46.8	38.2	39.3	42.5	45.7	37.3	38.4	41.5	44.6	36.4	**37.4**	40.5	43.5	34.5	35.6	38.5	41.3	32.0	32.9	35.7	38.3
		S/T	0.83	0.74	0.56	0.36	0.86	0.77	0.58	0.37	0.88	0.79	0.60	0.38	0.91	**0.81**	0.62	0.40	0.95	0.85	0.64	0.41	0.95	0.85	0.65	0.42
		ΔT	19	17	14	10	19	18	14	10	19	18	14	10	19	**18**	15	10	19	18	14	10	18	16	13	9
		kW	2.14	2.19	2.27	2.35	2.32	2.38	2.46	2.55	2.48	2.54	2.63	2.73	2.63	**2.69**	2.79	2.89	2.75	2.81	2.92	3.02	2.85	2.92	3.03	3.14
		Amps	9.1	9.3	9.6	10.0	9.9	10.1	10.4	10.8	10.7	11.0	11.3	11.8	11.4	**11.7**	12.1	12.6	12.2	12.5	12.9	13.4	12.9	13.2	13.7	14.2
		Hi PR	234	252	266	278	263	283	299	312	299	322	340	355	341	**367**	387	404	383	413	436	454	424	456	481	502
		Lo PR	112	119	130	139	119	126	138	147	123	131	143	153	130	**138**	150	160	136	144	158	168	140	149	163	174

IDB: Entering Indoor Dry Bulb Temperature

Shaded area reflects ACCA (TVA) conditions

kW = Total system power

High and low pressures are measured at the liquid and suction service valves.

Amps = outdoor unit amps (comp.+fan)

Expanded Cooling Data — SSX140421CA / CA*F4860*6B* (cont.)

			Outdoor Ambient Temperature																							
			65ºF				75ºF				85ºF				95ºF				105ºF				115ºF			
			Entering Indoor Wet Bulb Temperature																							
IDB	Airflow		59	63	67	71	59	63	67	71	59	63	67	71	59	63	67	71	59	63	67	71	59	63	67	71
80	1225	MBh	36.4	37.1	39.7	42.4	35.5	36.3	38.8	41.4	34.7	35.4	37.8	40.5	33.8	34.6	36.9	39.5	32.1	32.8	35.1	37.5	29.8	30.4	32.5	34.7
		S/T	0.86	0.81	0.66	0.49	0.89	0.84	0.68	0.51	0.92	0.86	0.70	0.52	0.94	0.89	0.72	0.54	0.98	0.92	0.75	0.56	0.99	0.93	0.75	0.56
		ΔT	24	23	20	16	24	23	20	16	24	23	20	16	24	23	20	16	24	23	20	16	22	21	18	15
		kW	2.10	2.14	2.22	2.30	2.27	2.33	2.41	2.50	2.43	2.49	2.58	2.67	2.57	2.63	2.73	2.83	2.69	2.75	2.85	2.96	2.79	2.86	2.96	3.07
		Amps	8.9	9.1	9.4	9.8	9.6	9.9	10.2	10.6	10.5	10.7	11.1	11.5	11.2	11.5	11.9	12.3	11.9	12.2	12.6	13.1	12.6	12.9	13.4	13.9
		Hi PR	229	246	260	271	257	277	292	305	292	315	332	346	333	358	378	395	375	403	426	444	414	445	470	490
		Lo PR	110	117	127	136	116	123	135	143	120	128	140	149	127	135	147	157	133	141	154	164	137	146	159	170
	1450	MBh	39.4	40.2	43.0	46.0	38.5	39.3	42.0	44.9	37.6	38.4	41.0	43.8	36.6	37.4	**40.0**	42.8	34.8	35.6	38.0	40.6	32.2	32.9	35.2	37.6
		S/T	0.89	0.84	0.68	0.51	0.93	0.87	0.71	0.53	0.95	0.89	0.72	0.54	0.98	0.92	**0.75**	0.56	1.00	0.95	0.78	0.58	1.00	0.96	0.78	0.59
		ΔT	22	21	19	15	23	22	19	15	23	22	19	15	23	22	**19**	15	22	22	19	15	20	20	17	14
		kW	2.15	2.20	2.28	2.36	2.34	2.39	2.48	2.57	2.50	2.56	2.65	2.75	2.64	2.71	**2.80**	2.91	2.77	2.83	2.93	3.04	2.87	2.94	3.05	3.16
		Amps	9.2	9.4	9.7	10.1	9.9	10.2	10.5	10.9	10.8	11.0	11.4	11.8	11.5	11.8	**12.2**	12.7	12.3	12.6	13.0	13.5	13.0	13.3	13.8	14.3
		Hi PR	236	254	268	280	265	285	301	314	301	324	342	357	343	369	**390**	407	386	415	439	458	427	459	485	506
		Lo PR	113	120	131	140	119	127	139	148	124	132	144	154	130	139	**152**	161	137	145	159	169	141	150	164	175
	1575	MBh	39.8	40.7	43.4	46.4	38.9	39.7	42.4	45.3	37.9	38.8	41.4	44.3	37.0	37.8	40.4	43.2	35.2	35.9	38.4	41.0	32.6	33.3	35.6	38.0
		S/T	0.91	0.85	0.70	0.52	0.94	0.89	0.72	0.54	0.97	0.91	0.74	0.55	1.00	0.94	0.76	0.57	1.00	0.97	0.79	0.59	1.00	0.98	0.80	0.60
		ΔT	21	20	18	14	21	21	18	14	21	21	18	14	22	21	18	14	21	20	18	14	19	19	17	13
		kW	2.16	2.21	2.29	2.37	2.34	2.40	2.48	2.57	2.51	2.57	2.66	2.75	2.65	2.71	2.81	2.91	2.77	2.84	2.94	3.05	2.88	2.95	3.06	3.17
		Amps	9.2	9.4	9.7	10.1	9.9	10.2	10.5	10.9	10.8	11.1	11.4	11.9	11.6	11.8	12.2	12.7	12.3	12.6	13.0	13.5	13.0	13.4	13.8	14.3
		Hi PR	237	255	269	281	266	286	302	315	302	325	343	358	344	370	391	408	387	417	440	459	428	460	486	507
		Lo PR	113	121	132	140	120	127	139	148	125	133	145	154	131	139	152	162	137	146	159	170	142	151	165	175
85	1225	MBh	37.0	37.7	39.5	42.1	36.1	36.8	38.6	41.2	35.3	36.0	37.7	40.2	34.4	35.1	36.7	39.2	32.7	33.3	34.9	37.2	30.3	30.9	32.3	34.5
		S/T	0.90	0.87	0.79	0.64	0.94	0.90	0.81	0.66	0.96	0.93	0.84	0.68	0.99	0.96	0.86	0.70	1.00	0.99	0.90	0.73	1.00	1.00	0.90	0.73
		ΔT	25	25	23	20	25	25	24	20	25	25	24	20	26	25	24	21	25	25	23	20	23	23	22	19
		kW	2.11	2.16	2.24	2.32	2.29	2.35	2.43	2.52	2.45	2.51	2.60	2.70	2.59	2.66	2.75	2.85	2.71	2.78	2.88	2.99	2.82	2.89	2.99	3.10
		Amps	9.0	9.2	9.5	9.9	9.7	10.0	10.3	10.7	10.6	10.8	11.2	11.6	11.3	11.6	12.0	12.4	12.0	12.3	12.7	13.2	12.8	13.1	13.5	14.0
		Hi PR	231	249	263	274	260	279	295	308	295	318	335	350	336	362	382	399	378	407	430	448	418	450	475	495
		Lo PR	111	118	129	137	117	125	136	145	122	129	141	150	128	136	148	158	134	142	156	166	139	147	161	171
	1450	MBh	40.1	40.9	42.8	45.6	39.1	39.9	41.8	44.6	38.2	39.0	40.8	43.5	37.3	38.0	39.8	42.5	35.4	36.1	37.8	40.3	32.8	33.4	35.0	37.4
		S/T	0.94	0.90	0.82	0.66	0.97	0.94	0.85	0.69	1.00	0.96	0.87	0.70	1.00	0.99	0.89	0.73	1.00	1.00	0.93	0.75	1.00	1.00	0.94	0.76
		ΔT	24	23	22	19	24	24	22	19	24	24	22	19	24	24	23	20	22	23	22	19	21	21	21	18
		kW	2.17	2.22	2.30	2.38	2.36	2.41	2.50	2.59	2.52	2.58	2.67	2.77	2.67	2.73	2.83	2.93	2.79	2.86	2.96	3.07	2.90	2.97	3.07	3.19
		Amps	9.3	9.5	9.8	10.2	10.0	10.3	10.6	11.0	10.9	11.1	11.5	11.9	11.6	11.9	12.3	12.8	12.4	12.7	13.1	13.6	13.1	13.4	13.9	14.4
		Hi PR	238	257	271	283	268	288	304	317	304	328	346	361	347	373	394	411	390	420	443	462	431	464	490	511
		Lo PR	114	122	133	141	121	128	140	149	125	133	146	155	132	140	153	163	138	147	160	171	143	152	166	177
	1575	MBh	40.5	41.3	43.2	46.1	39.5	40.3	42.2	45.0	38.6	39.3	41.2	44.0	37.7	38.4	40.2	42.9	35.8	36.5	38.2	40.7	33.1	33.8	35.4	37.7
		S/T	0.96	0.92	0.83	0.67	0.99	0.96	0.86	0.70	1.00	0.98	0.88	0.72	1.00	1.00	0.91	0.74	1.00	1.00	0.95	0.77	1.00	1.00	0.95	0.77
		ΔT	23	22	21	18	23	22	21	18	23	22	21	18	22	22	21	19	21	21	21	18	19	20	20	17
		kW	2.18	2.23	2.31	2.39	2.36	2.42	2.51	2.60	2.53	2.59	2.68	2.78	2.67	2.74	2.84	2.94	2.80	2.87	2.97	3.08	2.90	2.98	3.08	3.20
		Amps	9.3	9.5	9.8	10.2	10.0	10.3	10.6	11.0	10.9	11.2	11.5	12.0	11.7	11.9	12.3	12.8	12.4	12.7	13.1	13.7	13.2	13.5	13.9	14.5
		Hi PR	239	257	272	284	268	289	305	318	305	328	347	362	348	374	395	412	391	421	444	464	432	465	491	512
		Lo PR	115	122	133	142	121	129	141	150	126	134	146	156	132	141	153	163	138	147	161	171	143	152	166	177

IDB: Entering Indoor Dry Bulb Temperature

Shaded area reflects AHRI (TVA) conditions

kW = Total system power

High and low pressures are measured at the liquid and suction service valves.

Amps = outdoor unit amps (comp.+fan)

Expanded Cooling Data — SSX140481A* / CA*F4860D6A* / .079 Orifice

			Outdoor Ambient Temperature																							
			65ºF				75ºF				85ºF				95ºF				105ºF				115ºF			
			Entering Indoor Wet Bulb Temperature																							
IDB	Airflow		59	63	67	71	59	63	67	71	59	63	67	71	59	63	67	71	59	63	67	71	59	63	67	71
70	1744	MBh	45.1	46.7	51.2	-	44.0	45.6	50.0	-	43.0	44.5	48.8	-	41.9	43.5	47.6	-	39.8	41.3	45.2	-	36.9	38.2	41.9	-
		S/T	0.73	0.61	0.42	-	0.76	0.63	0.44	-	0.78	0.65	0.45	-	0.80	0.67	0.47	-	0.83	0.70	0.48	-	0.84	0.70	0.49	-
		ΔT	17	15	11	-	18	15	12	-	18	15	12	-	18	15	12	-	18	15	12	-	16	14	11	-
		kW	3.06	3.11	3.20	-	3.27	3.33	3.43	-	3.45	3.52	3.63	-	3.62	3.69	3.81	-	3.76	3.84	3.95	-	3.88	3.96	4.08	-
		Amps	11.0	11.2	11.6	-	11.9	12.1	12.5	-	12.9	13.2	13.6	-	13.7	14.0	14.5	-	14.6	14.9	15.4	-	15.4	15.8	16.3	-
		Hi PR	234	252	255	-	265	285	289	-	301	324	328	-	343	369	374	-	386	415	421	-	432	464	471	-
		Lo PR	121	125	137	-	125	129	141	-	129	133	145	-	133	137	149	-	135	139	152	-	139	143	156	-
	1550	MBh	43.8	45.4	49.7	-	42.7	44.3	48.5	-	41.7	43.2	47.4	-	40.7	42.2	46.2	-	38.7	40.1	43.9	-	35.8	37.1	40.7	-
		S/T	0.70	0.58	0.40	-	0.72	0.61	0.42	-	0.74	0.62	0.43	-	0.77	0.64	0.44	-	0.80	0.66	0.46	-	0.80	0.67	0.46	-
		ΔT	18	16	12	-	18	16	12	-	18	16	12	-	19	16	12	-	18	16	12	-	17	15	11	-
		kW	3.03	3.09	3.18	-	3.24	3.31	3.40	-	3.43	3.50	3.60	-	3.59	3.67	3.78	-	3.73	3.81	3.92	-	3.85	3.93	4.05	-
		Amps	10.9	11.1	11.5	-	11.7	12.0	12.4	-	12.7	13.0	13.5	-	13.6	13.9	14.4	-	14.5	14.8	15.3	-	15.3	15.7	16.2	-
		Hi PR	232	249	253	-	262	282	286	-	298	320	325	-	339	365	370	-	382	411	416	-	428	460	466	-
		Lo PR	120	124	135	-	124	128	139	-	128	132	144	-	131	135	148	-	134	138	151	-	137	141	154	-
	1356	MBh	40.4	41.9	45.9	-	39.5	40.9	44.8	-	38.5	39.9	43.7	-	37.6	38.9	42.7	-	35.7	37.0	40.5	-	33.1	34.3	37.5	-
		S/T	0.67	0.56	0.39	-	0.70	0.58	0.40	-	0.72	0.60	0.41	-	0.74	0.62	0.43	-	0.77	0.64	0.44	-	0.77	0.65	0.45	-
		ΔT	18	16	12	-	19	16	12	-	19	16	12	-	19	16	12	-	19	16	12	-	17	15	11	-
		kW	3.01	3.07	3.16	-	3.22	3.28	3.38	-	3.40	3.47	3.57	-	3.57	3.64	3.75	-	3.70	3.78	3.89	-	3.82	3.90	4.02	-
		Amps	10.8	11.0	11.4	-	11.6	11.9	12.3	-	12.6	12.9	13.3	-	13.5	13.8	14.2	-	14.3	14.7	15.2	-	15.2	15.5	16.0	-
		Hi PR	229	247	250	-	259	279	283	-	295	317	322	-	336	361	366	-	378	406	412	-	423	455	462	-
		Lo PR	119	123	134	-	122	126	138	-	127	131	143	-	130	134	146	-	133	137	149	-	136	140	153	-
75	1744	MBh	45.8	47.2	51.1	54.8	44.8	46.1	49.9	53.6	43.7	45.0	48.7	52.3	42.6	**43.9**	47.5	51.0	40.5	41.7	45.1	48.5	37.5	38.6	41.8	44.9
		S/T	0.83	0.75	0.56	0.36	0.86	0.77	0.58	0.38	0.89	0.79	0.60	0.39	0.91	**0.82**	0.62	0.40	0.95	0.85	0.64	0.41	0.96	0.86	0.65	0.42
		ΔT	20	19	15	10	20	19	15	11	20	19	15	11	21	**19**	16	11	20	19	15	11	19	17	14	10
		kW	3.06	3.11	3.20	3.30	3.27	3.33	3.43	3.53	3.45	3.52	3.63	3.74	3.62	**3.69**	3.81	3.92	3.76	3.84	3.95	4.08	3.88	3.96	4.08	4.21
		Amps	11.0	11.2	11.6	12.0	11.9	12.1	12.5	13.0	12.9	13.2	13.6	14.1	13.7	**14.0**	14.5	15.1	14.6	14.9	15.4	16.0	15.4	15.8	16.3	17.0
		Hi PR	234	252	255	261	265	285	289	295	301	324	328	335	343	**369**	374	382	386	415	421	430	432	464	471	481
		Lo PR	121	125	137	145	125	129	141	150	129	133	145	155	133	**137**	149	159	135	139	152	162	139	143	156	166
	1550	MBh	44.5	45.8	49.6	53.2	43.5	44.8	48.4	52.0	42.4	43.7	47.3	50.8	41.4	**42.6**	46.1	49.5	39.3	40.5	43.8	47.0	36.4	37.5	40.6	43.6
		S/T	0.79	0.71	0.54	0.35	0.82	0.74	0.56	0.36	0.84	0.76	0.57	0.37	0.87	**0.78**	0.59	0.38	0.90	0.81	0.61	0.39	0.91	0.82	0.62	0.40
		ΔT	21	19	16	11	21	20	16	11	21	20	16	11	21	**20**	16	11	21	19	16	11	20	18	15	10
		kW	3.03	3.09	3.18	3.27	3.24	3.31	3.40	3.51	3.43	3.50	3.60	3.71	3.59	**3.67**	3.78	3.89	3.73	3.81	3.92	4.05	3.85	3.93	4.05	4.18
		Amps	10.9	11.1	11.5	11.9	11.7	12.0	12.4	12.9	12.7	13.0	13.5	14.0	13.6	**13.9**	14.4	14.9	14.5	14.8	15.3	15.9	15.3	15.7	16.2	16.8
		Hi PR	232	249	253	258	262	282	286	292	298	320	325	332	339	**365**	370	378	382	411	416	426	428	460	466	477
		Lo PR	120	124	135	144	124	128	139	148	128	132	144	153	131	**135**	148	157	134	138	151	161	137	141	154	164
	1356	MBh	41.1	42.3	45.8	49.1	40.1	41.3	44.7	48.0	39.2	40.3	43.7	46.8	38.2	**39.3**	42.6	45.7	36.3	37.4	40.5	43.4	33.6	34.6	37.5	40.2
		S/T	0.77	0.69	0.52	0.33	0.79	0.71	0.54	0.35	0.81	0.73	0.55	0.35	0.84	**0.75**	0.57	0.37	0.87	0.78	0.59	0.38	0.88	0.79	0.60	0.38
		ΔT	21	20	16	11	22	20	16	11	22	20	16	11	22	**20**	16	11	21	20	16	11	20	18	15	10
		kW	3.01	3.07	3.16	3.25	3.22	3.28	3.38	3.48	3.40	3.47	3.57	3.68	3.57	**3.64**	3.75	3.86	3.70	3.78	3.89	4.01	3.82	3.90	4.02	4.15
		Amps	10.8	11.0	11.4	11.8	11.6	11.9	12.3	12.7	12.6	12.9	13.3	13.8	13.5	**13.8**	14.2	14.8	14.3	14.7	15.2	15.7	15.2	15.5	16.0	16.6
		Hi PR	229	247	250	256	259	279	283	289	295	317	322	329	336	**361**	366	374	378	406	412	421	423	455	462	472
		Lo PR	119	123	134	143	122	126	138	147	127	131	143	152	130	**134**	146	156	133	137	149	159	136	140	153	163

IDB: Entering Indoor Dry Bulb Temperature

High and low pressures are measured at the liquid and suction service valves.

Shaded area reflects ACCA (TVA) conditions

kW = Total system power

Amps = outdoor unit amps (comp.+fan)

Expanded Cooling Data — SSX140481A* / CA*F4860D6A* / .079 Orifice (cont.)

			Outdoor Ambient Temperature																							
			65ºF				75ºF				85ºF				95ºF				105ºF				115ºF			
			Entering Indoor Wet Bulb Temperature																							
IDB	Airflow		59	63	67	71	59	63	67	71	59	63	67	71	59	63	67	71	59	63	67	71	59	63	67	71
80	1744	MBh	46.7	47.7	50.9	54.4	45.6	46.6	49.7	53.2	44.5	45.5	48.6	51.9	43.4	44.3	47.4	50.6	41.2	42.1	45.0	48.1	38.2	39.0	41.7	44.6
		S/T	0.91	0.86	0.70	0.52	0.95	0.89	0.72	0.54	1.00	0.91	0.74	0.55	1.00	0.94	0.77	0.57	1.00	1.00	0.79	0.59	1.00	1.00	0.80	0.60
		ΔT	22	22	19	15	23	22	19	15	23	22	19	15	23	22	19	15	22	22	19	15	20	21	18	14
		kW	3.06	3.11	3.20	3.30	3.27	3.33	3.43	3.53	3.45	3.52	3.63	3.74	3.62	3.69	3.81	3.92	3.76	3.84	3.95	4.08	3.88	3.96	4.08	4.21
		Amps	11.0	11.2	11.6	12.0	11.9	12.1	12.5	13.0	12.9	13.2	13.6	14.1	13.7	14.0	14.5	15.1	14.6	14.9	15.4	16.0	15.4	15.8	16.3	17.0
		Hi PR	234	252	255	261	265	285	289	295	301	324	328	335	343	369	374	382	386	415	421	430	432	464	471	481
		Lo PR	121	125	137	145	125	129	141	150	129	133	145	155	133	137	149	159	135	139	152	162	139	143	156	166
	1550	MBh	45.3	46.3	49.5	52.9	44.2	45.2	48.3	51.6	43.2	44.1	47.2	50.4	42.1	43.1	**46.0**	49.2	40.0	40.9	43.7	46.7	37.1	37.9	40.5	43.3
		S/T	0.87	0.82	0.67	0.50	0.90	0.85	0.69	0.52	0.93	0.87	0.71	0.53	0.96	0.90	**0.73**	0.55	0.99	0.93	0.76	0.57	1.00	0.94	0.76	0.57
		ΔT	23	22	20	16	24	23	20	16	24	23	20	16	24	23	**20**	16	24	23	20	16	22	21	18	15
		kW	3.03	3.09	3.18	3.27	3.24	3.31	3.40	3.51	3.43	3.50	3.60	3.71	3.59	3.67	**3.78**	3.89	3.73	3.81	3.92	4.05	3.85	3.93	4.05	4.18
		Amps	10.9	11.1	11.5	11.9	11.7	12.0	12.4	12.9	12.7	13.0	13.5	14.0	13.6	13.9	**14.4**	14.9	14.5	14.8	15.3	15.9	15.3	15.7	16.2	16.8
		Hi PR	232	249	253	258	262	282	286	292	298	320	325	332	339	365	**370**	378	382	411	416	426	428	460	466	477
		Lo PR	120	124	135	144	124	128	139	148	128	132	144	153	131	135	**148**	157	134	138	151	161	137	141	154	164
	1356	MBh	41.8	42.7	45.6	48.8	40.8	41.7	44.6	47.7	39.9	40.7	43.5	46.5	38.9	39.7	42.5	45.4	36.9	37.8	40.3	43.1	34.2	35.0	37.4	39.9
		S/T	0.84	0.79	0.64	0.48	0.87	0.82	0.67	0.50	0.89	0.84	0.68	0.51	0.92	0.86	0.70	0.53	0.96	0.90	0.73	0.55	0.97	0.91	0.74	0.55
		ΔT	24	23	20	16	24	23	20	16	24	23	20	16	24	23	20	16	24	23	20	16	22	21	19	15
		kW	3.01	3.07	3.16	3.25	3.22	3.28	3.38	3.48	3.40	3.47	3.57	3.68	3.57	3.64	3.75	3.86	3.70	3.78	3.89	4.01	3.82	3.90	4.02	4.15
		Amps	10.8	11.0	11.4	11.8	11.6	11.9	12.3	12.7	12.6	12.9	13.3	13.8	13.5	13.8	14.2	14.8	14.3	14.7	15.2	15.7	15.2	15.5	16.0	16.6
		Hi PR	229	247	250	256	259	279	283	289	295	317	322	329	336	361	366	374	378	406	412	421	423	455	462	472
		Lo PR	119	123	134	143	122	126	138	147	127	131	143	152	130	134	146	156	133	137	149	159	136	140	153	163
85	1744	MBh	47.5	48.4	50.7	54.1	46.4	47.3	49.5	52.8	45.3	46.1	48.3	51.6	44.2	45.0	47.1	50.3	42.0	42.8	44.8	47.8	38.9	39.6	41.5	44.3
		S/T	0.96	0.92	0.83	0.68	0.99	0.96	0.86	0.70	1.00	0.98	0.89	0.72	1.00	1.00	0.92	0.74	1.00	1.00	0.95	0.77	1.00	1.00	0.96	0.78
		ΔT	24	24	22	19	24	24	23	20	24	24	23	20	23	24	23	20	22	23	22	19	20	21	21	18
		kW	3.06	3.11	3.20	3.30	3.27	3.33	3.43	3.53	3.45	3.52	3.63	3.74	3.62	3.69	3.81	3.92	3.76	3.84	3.95	4.08	3.88	3.96	4.08	4.21
		Amps	11.0	11.2	11.6	12.0	11.9	12.1	12.5	13.0	12.9	13.2	13.6	14.1	13.7	14.0	14.5	15.1	14.6	14.9	15.4	16.0	15.4	15.8	16.3	17.0
		Hi PR	234	252	255	261	265	285	289	295	301	324	328	335	343	369	374	382	386	415	421	430	432	464	471	481
		Lo PR	121	125	137	145	125	129	141	150	129	133	145	155	133	137	149	159	135	139	152	162	139	143	156	166
	1550	MBh	46.1	47.0	49.2	52.5	45.0	45.9	48.1	51.3	43.9	44.8	46.9	50.1	42.9	43.7	45.8	48.8	40.7	41.5	43.5	46.4	37.7	38.5	40.3	43.0
		S/T	0.91	0.88	0.80	0.65	0.95	0.91	0.82	0.67	0.97	0.94	0.85	0.69	1.00	0.97	0.87	0.71	1.00	1.00	0.91	0.74	1.00	1.00	0.91	0.74
		ΔT	25	25	23	20	25	25	24	20	25	25	24	20	25	25	24	21	24	25	23	20	22	23	22	19
		kW	3.03	3.09	3.18	3.27	3.24	3.31	3.40	3.51	3.43	3.50	3.60	3.71	3.59	3.67	3.78	3.89	3.73	3.81	3.92	4.05	3.85	3.93	4.05	4.18
		Amps	10.9	11.1	11.5	11.9	11.7	12.0	12.4	12.9	12.7	13.0	13.5	14.0	13.6	13.9	14.4	14.9	14.5	14.8	15.3	15.9	15.3	15.7	16.2	16.8
		Hi PR	232	249	253	258	262	282	286	292	298	320	325	332	339	365	370	378	382	411	416	426	428	460	466	477
		Lo PR	120	124	135	144	124	128	139	148	128	132	144	153	131	135	148	157	134	138	151	161	137	141	154	164
	1356	MBh	42.5	43.4	45.4	48.5	41.5	42.4	44.4	47.3	40.6	41.3	43.3	46.2	39.6	40.3	42.2	45.1	37.6	38.3	40.1	42.8	34.8	35.5	37.2	39.7
		S/T	0.88	0.85	0.77	0.62	0.91	0.88	0.80	0.65	0.94	0.90	0.82	0.66	0.97	0.93	0.84	0.68	1.00	0.97	0.87	0.71	1.00	0.98	0.88	0.71
		ΔT	25	25	24	20	26	25	24	21	26	25	24	21	26	26	24	21	25	25	24	21	24	23	22	19
		kW	3.01	3.07	3.16	3.25	3.22	3.28	3.38	3.48	3.40	3.47	3.57	3.68	3.57	3.64	3.75	3.86	3.70	3.78	3.89	4.01	3.82	3.90	4.02	4.15
		Amps	10.8	11.0	11.4	11.8	11.6	11.9	12.3	12.7	12.6	12.9	13.3	13.8	13.5	13.8	14.2	14.8	14.3	14.7	15.2	15.7	15.2	15.5	16.0	16.6
		Hi PR	229	247	250	256	259	279	283	289	295	317	322	329	336	361	366	374	378	406	412	421	423	455	462	472
		Lo PR	119	123	134	143	122	126	138	147	127	131	143	152	130	134	146	156	133	137	149	159	136	140	153	163

IDB: Entering Indoor Dry Bulb Temperature

High and low pressures are measured at the liquid and suction service valves.

Shaded area reflects AHRI (TVA) conditions

kW = Total system power

Amps = outdoor unit amps (comp.+fan)

Expanded Cooling Data — SSX140481B* / CA*F4860*6D* / 0.078 Orifice

			Outdoor Ambient Temperature																							
			65ºF				75ºF				85ºF				95ºF				105ºF				115ºF			
			Entering Indoor Wet Bulb Temperature																							
IDB	Airflow		59	63	67	71	59	63	67	71	59	63	67	71	59	63	67	71	59	63	67	71	59	63	67	71
70	1750	MBh	45.1	46.7	51.2	-	44.0	45.6	50.0	-	43.0	44.5	48.8	-	41.9	43.5	47.6	-	39.8	41.3	45.2	-	36.9	38.2	41.9	-
		S/T	0.76	0.63	0.44	-	0.78	0.66	0.45	-	0.80	0.67	0.47	-	0.83	0.69	0.48	-	0.86	0.72	0.50	-	0.87	0.73	0.50	-
		ΔT	18	16	12	-	18	16	12	-	18	16	12	-	18	16	12	-	18	16	12	-	17	15	11	-
		kW	3.04	3.10	3.19	-	3.25	3.32	3.42	-	3.44	3.51	3.62	-	3.61	3.69	3.80	-	3.75	3.83	3.95	-	3.88	3.96	4.08	-
		Amps	10.8	11.1	11.5	-	11.7	12.1	12.5	-	12.9	13.2	13.7	-	13.8	14.2	14.7	-	14.8	15.2	15.7	-	15.7	16.2	16.8	-
		Hi PR	223	240	253	-	250	269	284	-	284	306	323	-	324	349	368	-	365	392	414	-	403	433	458	-
		Lo PR	106	113	124	-	112	120	131	-	117	124	136	-	123	131	143	-	129	137	149	-	133	142	155	-
	1550	MBh	43.8	45.4	49.7	-	42.7	44.3	48.5	-	41.7	43.2	47.4	-	40.7	42.2	46.2	-	38.7	40.1	43.9	-	35.8	37.1	40.7	-
		S/T	0.72	0.60	0.42	-	0.75	0.62	0.43	-	0.77	0.64	0.44	-	0.79	0.66	0.46	-	0.82	0.69	0.48	-	0.83	0.69	0.48	-
		ΔT	19	16	12	-	19	16	12	-	19	16	12	-	19	17	13	-	19	16	12	-	18	15	12	-
		kW	3.01	3.07	3.16	-	3.23	3.29	3.39	-	3.42	3.49	3.59	-	3.58	3.66	3.77	-	3.72	3.80	3.92	-	3.85	3.93	4.05	-
		Amps	10.7	10.9	11.3	-	11.6	11.9	12.4	-	12.7	13.1	13.5	-	13.7	14.1	14.6	-	14.6	15.0	15.6	-	15.6	16.0	16.6	-
		Hi PR	221	238	251	-	248	267	281	-	282	303	320	-	321	345	365	-	361	388	410	-	399	429	453	-
		Lo PR	105	112	122	-	111	118	129	-	116	123	134	-	122	129	141	-	127	135	148	-	132	140	153	-
	1350	MBh	40.4	41.9	45.9	-	39.5	40.9	44.8	-	38.5	39.9	43.7	-	37.6	38.9	42.7	-	35.7	37.0	40.5	-	33.1	34.3	37.5	-
		S/T	0.70	0.58	0.40	-	0.72	0.60	0.42	-	0.74	0.62	0.43	-	0.76	0.64	0.44	-	0.79	0.66	0.46	-	0.80	0.67	0.46	-
		ΔT	19	17	13	-	19	17	13	-	19	17	13	-	20	17	13	-	19	17	13	-	18	16	12	-
		kW	2.95	3.01	3.09	-	3.16	3.22	3.31	-	3.34	3.41	3.51	-	3.50	3.57	3.68	-	3.64	3.71	3.83	-	3.76	3.83	3.95	-
		Amps	10.3	10.6	11.0	-	11.3	11.6	12.0	-	12.4	12.7	13.1	-	13.3	13.6	14.1	-	14.2	14.6	15.1	-	15.1	15.5	16.1	-
		Hi PR	214	230	243	-	240	259	273	-	273	294	310	-	311	335	354	-	350	377	398	-	387	416	440	-
		Lo PR	102	109	119	-	108	115	125	-	112	119	130	-	118	125	137	-	124	131	143	-	128	136	148	-
75	1750	MBh	45.8	47.2	51.1	54.8	44.8	46.1	49.9	53.6	43.7	45.0	48.7	52.3	42.6	**43.9**	47.5	51.0	40.5	41.7	45.1	48.5	37.5	38.6	41.8	44.9
		S/T	0.86	0.77	0.58	0.37	0.89	0.80	0.60	0.39	0.91	0.82	0.62	0.40	0.94	**0.84**	0.64	0.41	0.98	0.88	0.66	0.43	0.99	0.88	0.67	0.43
		ΔT	21	19	16	11	21	19	16	11	21	19	16	11	21	**19**	16	11	21	19	16	11	19	18	15	10
		kW	3.06	3.12	3.21	3.31	3.28	3.34	3.44	3.55	3.47	3.54	3.65	3.76	3.64	**3.71**	3.83	3.95	3.78	3.86	3.98	4.11	3.91	3.99	4.12	4.25
		Amps	10.9	11.2	11.6	12.1	11.9	12.2	12.6	13.1	13.0	13.3	13.8	14.4	14.0	**14.3**	14.9	15.5	14.9	15.3	15.9	16.6	15.9	16.3	16.9	17.6
		Hi PR	225	242	256	267	253	272	287	300	287	309	327	341	327	**352**	372	388	368	396	418	436	407	438	462	482
		Lo PR	107	114	125	133	114	121	132	140	118	126	137	146	124	**132**	144	153	130	138	151	161	134	143	156	166
	1550	MBh	44.5	45.8	49.6	53.2	43.5	44.8	48.4	52.0	42.4	43.7	47.3	50.8	41.4	**42.6**	46.1	49.5	39.3	40.5	43.8	47.0	36.4	37.5	40.6	43.6
		S/T	0.82	0.73	0.56	0.36	0.85	0.76	0.58	0.37	0.87	0.78	0.59	0.38	0.90	**0.81**	0.61	0.39	0.93	0.84	0.63	0.41	0.94	0.84	0.64	0.41
		ΔT	22	20	16	11	22	20	17	11	22	20	17	11	22	**20**	17	12	22	20	16	11	20	19	15	11
		kW	3.04	3.10	3.19	3.28	3.25	3.32	3.42	3.52	3.44	3.51	3.62	3.73	3.61	**3.69**	3.80	3.92	3.75	3.83	3.95	4.08	3.88	3.96	4.08	4.21
		Amps	10.8	11.1	11.5	11.9	11.7	12.1	12.5	13.0	12.9	13.2	13.7	14.2	13.8	**14.2**	14.7	15.3	14.8	15.2	15.7	16.4	15.8	16.2	16.8	17.4
		Hi PR	223	240	253	264	250	269	284	297	285	306	323	337	324	**349**	368	384	365	392	414	432	403	434	458	477
		Lo PR	106	113	124	132	112	120	131	139	117	124	136	145	123	**131**	143	152	129	137	149	159	133	142	155	165
	1350	MBh	41.1	42.3	45.8	49.1	40.1	41.3	44.7	48.0	39.2	40.3	43.7	46.8	38.2	**39.3**	42.6	45.7	36.3	37.4	40.5	43.4	33.6	34.6	37.5	40.2
		S/T	0.79	0.71	0.54	0.34	0.82	0.73	0.56	0.36	0.84	0.75	0.57	0.37	0.87	**0.78**	0.59	0.38	0.90	0.81	0.61	0.39	0.91	0.81	0.62	0.40
		ΔT	22	20	17	12	22	21	17	12	22	21	17	12	23	**21**	17	12	22	21	17	12	21	19	16	11
		kW	2.97	3.03	3.12	3.21	3.18	3.24	3.34	3.44	3.36	3.43	3.54	3.65	3.53	**3.60**	3.71	3.83	3.67	3.74	3.86	3.98	3.79	3.86	3.99	4.11
		Amps	10.5	10.7	11.1	11.6	11.4	11.7	12.1	12.6	12.5	12.8	13.3	13.8	13.4	**13.8**	14.3	14.9	14.4	14.7	15.3	15.9	15.3	15.7	16.3	16.9
		Hi PR	216	233	246	256	243	261	276	288	276	297	314	327	314	**338**	357	373	354	381	402	419	391	421	444	463
		Lo PR	103	110	120	128	109	116	127	135	113	121	132	140	119	**127**	138	147	125	133	145	154	129	137	150	160

IDB: Entering Indoor Dry Bulb Temperature

High and low pressures are measured at the liquid and suction service valves.

Shaded area reflects ACCA (TVA) conditions

kW = Total system power

Amps = outdoor unit amps (comp.+fan)

Expanded Cooling Data — SSX140481B* / CA*F4860*6D* / 0.078 Orifice (cont.)

			Outdoor Ambient Temperature																							
			65ºF				75ºF				85ºF				95ºF				105ºF				115ºF			
			Entering Indoor Wet Bulb Temperature																							
IDB	Airflow		59	63	67	71	59	63	67	71	59	63	67	71	59	63	67	71	59	63	67	71	59	63	67	71
80	1750	MBh	46.7	47.7	50.9	54.4	45.6	46.6	49.7	53.2	44.5	45.5	48.6	51.9	43.4	44.3	47.4	50.6	41.2	42.1	45.0	48.1	38.2	39.0	41.7	44.6
		S/T	0.94	0.89	0.72	0.54	1.00	0.92	0.75	0.56	1.00	0.94	0.77	0.57	1.00	1.00	0.79	0.59	1.00	1.00	0.82	0.61	1.00	1.00	0.83	0.62
		ΔT	23	22	19	15	24	22	20	16	23	22	20	16	23	23	20	16	22	22	19	15	20	21	18	14
		kW	3.08	3.14	3.23	3.33	3.30	3.37	3.47	3.58	3.50	3.57	3.68	3.79	3.67	3.74	3.86	3.98	3.81	3.89	4.02	4.14	3.94	4.02	4.15	4.28
		Amps	11.0	11.3	11.7	12.2	12.0	12.3	12.7	13.3	13.1	13.5	14.0	14.5	14.1	14.5	15.0	15.6	15.1	15.5	16.1	16.7	16.1	16.5	17.1	17.8
		Hi PR	227	245	258	270	255	275	290	303	290	312	330	344	331	356	376	392	372	400	423	441	411	442	467	487
		Lo PR	109	116	126	134	115	122	133	142	119	127	138	147	125	133	145	155	131	140	152	162	136	144	158	168
	1550	MBh	45.3	46.3	49.5	52.9	44.2	45.2	48.3	51.6	43.2	44.1	47.2	50.4	42.1	43.1	**46.0**	49.2	40.0	40.9	43.7	46.7	37.1	37.9	40.5	43.3
		S/T	0.90	0.84	0.69	0.51	0.93	0.87	0.71	0.53	0.96	0.90	0.73	0.55	0.99	0.93	**0.75**	0.56	1.00	0.96	0.78	0.58	1.00	0.97	0.79	0.59
		ΔT	24	23	20	16	24	23	20	16	25	23	20	16	25	24	**21**	16	24	23	20	16	22	22	19	15
		kW	3.06	3.12	3.21	3.31	3.28	3.34	3.44	3.55	3.47	3.54	3.65	3.76	3.64	3.72	**3.83**	3.95	3.78	3.86	3.98	4.11	3.91	3.99	4.12	4.25
		Amps	10.9	11.2	11.6	12.1	11.9	12.2	12.6	13.1	13.0	13.3	13.8	14.4	14.0	14.3	**14.9**	15.5	14.9	15.3	15.9	16.6	15.9	16.3	16.9	17.6
		Hi PR	225	242	256	267	253	272	287	300	287	309	327	341	327	352	**372**	388	368	396	419	436	407	438	462	482
		Lo PR	107	114	125	133	114	121	132	140	118	126	137	146	124	132	**144**	153	130	138	151	161	134	143	156	166
	1350	MBh	41.8	42.7	45.6	48.8	40.8	41.7	44.6	47.7	39.9	40.7	43.5	46.5	38.9	39.7	42.5	45.4	36.9	37.8	40.3	43.1	34.2	35.0	37.4	39.9
		S/T	0.87	0.81	0.66	0.50	0.90	0.84	0.69	0.51	0.92	0.87	0.70	0.53	0.95	0.89	0.73	0.54	0.99	0.93	0.75	0.56	1.00	0.93	0.76	0.57
		ΔT	25	24	21	16	25	24	21	17	25	24	21	17	25	24	21	17	25	24	21	17	23	22	19	15
		kW	2.99	3.05	3.14	3.23	3.20	3.27	3.36	3.47	3.39	3.46	3.56	3.67	3.55	3.63	3.74	3.86	3.69	3.77	3.89	4.01	3.82	3.90	4.02	4.15
		Amps	10.6	10.8	11.2	11.7	11.5	11.8	12.2	12.7	12.6	12.9	13.4	14.0	13.6	13.9	14.4	15.0	14.5	14.9	15.4	16.1	15.4	15.8	16.4	17.1
		Hi PR	218	235	248	259	245	264	279	291	279	300	317	330	318	342	361	376	357	384	406	423	395	425	449	468
		Lo PR	104	111	121	129	110	117	128	136	114	122	133	142	120	128	140	149	126	134	146	156	130	139	151	161
85	1750	MBh	47.5	48.4	50.7	54.1	46.4	47.3	49.5	52.8	45.3	46.1	48.3	51.6	44.2	45.0	47.1	50.3	42.0	42.8	44.8	47.8	38.9	39.6	41.5	44.3
		S/T	0.99	0.95	0.86	0.70	1.00	0.99	0.89	0.72	1.00	1.00	0.92	0.74	1.00	1.00	0.95	0.77	1.00	1.00	0.98	0.80	1.00	1.00	0.99	0.80
		ΔT	25	24	23	20	24	25	23	20	24	24	23	20	23	24	23	20	22	22	23	20	20	21	22	19
		kW	3.10	3.17	3.26	3.36	3.33	3.39	3.50	3.60	3.52	3.60	3.71	3.82	3.70	3.77	3.89	4.01	3.84	3.92	4.05	4.18	3.97	4.06	4.18	4.32
		Amps	11.1	11.4	11.8	12.3	12.1	12.4	12.9	13.4	13.3	13.6	14.1	14.7	14.3	14.6	15.2	15.8	15.2	15.7	16.2	16.9	16.2	16.7	17.3	18.0
		Hi PR	230	247	261	272	258	277	293	306	293	316	333	348	334	359	379	396	376	404	427	445	415	447	472	492
		Lo PR	110	117	127	136	116	123	135	143	120	128	140	149	126	135	147	156	133	141	154	164	137	146	159	170
	1550	MBh	46.1	47.0	49.2	52.5	45.0	45.9	48.1	51.3	43.9	44.8	46.9	50.1	42.9	43.7	45.8	48.8	40.7	41.5	43.5	46.4	37.7	38.5	40.3	43.0
		S/T	0.94	0.91	0.82	0.67	0.98	0.94	0.85	0.69	1.00	0.97	0.87	0.71	1.00	1.00	0.90	0.73	1.00	1.00	0.94	0.76	1.00	1.00	0.94	0.77
		ΔT	26	25	24	21	26	26	24	21	26	26	24	21	25	26	24	21	24	25	24	21	22	23	23	20
		kW	3.08	3.14	3.23	3.33	3.30	3.37	3.47	3.58	3.50	3.57	3.68	3.79	3.67	3.74	3.86	3.98	3.81	3.89	4.02	4.14	3.94	4.02	4.15	4.28
		Amps	11.0	11.3	11.7	12.2	12.0	12.3	12.7	13.3	13.1	13.5	14.0	14.5	14.1	14.5	15.0	15.6	15.1	15.5	16.1	16.7	16.1	16.5	17.1	17.8
		Hi PR	227	245	258	270	255	275	290	303	290	312	330	344	331	356	376	392	372	400	423	441	411	442	467	487
		Lo PR	109	116	126	134	115	122	133	142	119	127	138	147	125	133	145	155	131	140	152	162	136	144	158	168
	1350	MBh	42.5	43.4	45.4	48.5	41.5	42.4	44.4	47.3	40.6	41.3	43.3	46.2	39.6	40.3	42.2	45.1	37.6	38.3	40.1	42.8	34.8	35.5	37.2	39.7
		S/T	0.91	0.88	0.79	0.64	0.94	0.91	0.82	0.67	0.97	0.93	0.84	0.68	1.00	0.96	0.87	0.71	1.00	1.00	0.90	0.73	1.00	1.00	0.91	0.74
		ΔT	26	26	25	21	27	26	25	21	27	26	25	21	27	26	25	22	26	26	25	21	24	24	23	20
		kW	3.01	3.07	3.16	3.26	3.23	3.29	3.39	3.49	3.42	3.49	3.59	3.70	3.58	3.66	3.77	3.89	3.72	3.80	3.92	4.04	3.85	3.93	4.05	4.18
		Amps	10.7	10.9	11.3	11.8	11.6	11.9	12.4	12.9	12.7	13.1	13.5	14.1	13.7	14.1	14.6	15.2	14.6	15.0	15.6	16.2	15.6	16.0	16.6	17.3
		Hi PR	221	237	251	262	248	266	281	293	282	303	320	334	321	345	364	380	361	388	410	428	399	429	453	472
		Lo PR	105	112	122	130	111	118	129	138	116	123	134	143	121	129	141	150	127	135	148	157	132	140	153	163

IDB: Entering Indoor Dry Bulb Temperature

High and low pressures are measured at the liquid and suction service valves.

Shaded area reflects AHRI (TVA) conditions

kW = Total system power

Amps = outdoor unit amps (comp.+fan)

Expanded Cooling Data — SSX140601A* / CA*F4860D6A* / .088 Orifice

			Outdoor Ambient Temperature																							
			65ºF				75ºF				85ºF				95ºF				105ºF				115ºF			
			Entering Indoor Wet Bulb Temperature																							
IDB	Airflow		59	63	67	71	59	63	67	71	59	63	67	71	59	63	67	71	59	63	67	71	59	63	67	71
70	2025	MBh	54.9	56.9	62.3	-	53.6	55.6	60.9	-	52.3	54.2	59.4	-	51.0	52.9	58.0	-	48.5	50.3	55.1	-	44.9	46.6	51.0	-
		S/T	0.71	0.60	0.41	-	0.74	0.62	0.43	-	0.76	0.63	0.44	-	0.78	0.65	0.45	-	0.81	0.68	0.47	-	0.82	0.68	0.47	-
		ΔT	18	15	12	-	18	16	12	-	18	16	12	-	18	16	12	-	18	15	12	-	17	14	11	-
		kW	4.04	4.13	4.25	-	4.35	4.44	4.58	-	4.61	4.71	4.86	-	4.85	4.95	5.11	-	5.05	5.16	5.33	-	5.22	5.34	5.51	-
		Amps	14.5	14.8	15.3	-	15.6	16.0	16.6	-	17.0	17.4	18.0	-	18.2	18.7	19.3	-	21.3	21.8	22.6	-	22.5	23.1	23.8	-
		Hi PR	249	268	272	-	274	294	298	-	320	344	349	-	365	392	398	-	411	441	448	-	474	510	517	-
		Lo PR	117	120	132	-	120	124	135	-	124	128	140	-	128	132	144	-	130	134	147	-	133	138	150	-
	1800	MBh	53.3	55.2	60.5	-	52.0	53.9	59.1	-	50.8	52.7	57.7	-	49.6	51.4	56.3	-	47.1	48.8	53.5	-	43.6	45.2	49.5	-
		S/T	0.68	0.57	0.39	-	0.71	0.59	0.41	-	0.72	0.60	0.42	-	0.75	0.62	0.43	-	0.78	0.65	0.45	-	0.78	0.65	0.45	-
		ΔT	19	16	12	-	19	16	12	-	19	16	12	-	19	16	12	-	19	16	12	-	17	15	11	-
		kW	4.01	4.09	4.22	-	4.31	4.40	4.54	-	4.58	4.67	4.82	-	4.81	4.91	5.07	-	5.01	5.12	5.29	-	5.18	5.30	5.47	-
		Amps	14.3	14.7	15.2	-	15.5	15.9	16.4	-	16.9	17.3	17.9	-	18.1	18.5	19.1	-	21.1	21.6	22.4	-	22.3	22.8	23.6	-
		Hi PR	247	265	269	-	271	291	296	-	317	341	346	-	361	388	394	-	406	437	443	-	470	505	512	-
		Lo PR	116	119	130	-	119	123	134	-	123	127	139	-	126	130	142	-	129	133	145	-	132	136	149	-
	1575	MBh	49.2	51.0	55.8	-	48.0	49.8	54.5	-	46.9	48.6	53.2	-	45.7	47.4	51.9	-	43.5	45.0	49.3	-	40.3	41.7	45.7	-
		S/T	0.66	0.55	0.38	-	0.68	0.57	0.39	-	0.70	0.58	0.40	-	0.72	0.60	0.42	-	0.75	0.62	0.43	-	0.75	0.63	0.44	-
		ΔT	19	16	12	-	19	17	13	-	19	17	13	-	19	17	13	-	19	16	12	-	18	15	12	-
		kW	3.98	4.06	4.19	-	4.28	4.37	4.50	-	4.54	4.64	4.78	-	4.77	4.87	5.03	-	4.97	5.08	5.24	-	5.14	5.25	5.42	-
		Amps	14.2	14.5	15.0	-	15.4	15.7	16.3	-	16.7	17.1	17.7	-	17.9	18.3	19.0	-	20.9	21.4	22.2	-	22.1	22.6	23.4	-
		Hi PR	244	263	266	-	268	288	293	-	314	338	342	-	358	385	390	-	402	433	439	-	465	500	507	-
		Lo PR	114	118	129	-	118	122	133	-	122	126	137	-	125	129	141	-	128	132	144	-	131	135	147	-
75	2025	MBh	55.8	57.5	62.2	66.7	54.5	56.1	60.7	65.2	53.2	54.8	59.3	63.6	51.9	**53.4**	57.9	62.1	49.3	50.8	55.0	59.0	45.7	47.0	50.9	54.6
		S/T	0.81	0.73	0.55	0.35	0.84	0.75	0.57	0.37	0.86	0.77	0.58	0.38	0.89	**0.80**	0.60	0.39	0.92	0.83	0.63	0.40	0.93	0.83	0.63	0.41
		ΔT	21	19	16	11	21	19	16	11	21	19	16	11	21	**19**	16	11	21	19	16	11	19	18	15	10
		kW	4.04	4.13	4.25	4.39	4.35	4.44	4.58	4.72	4.61	4.71	4.86	5.02	4.85	**4.95**	5.11	5.28	5.05	5.16	5.33	5.51	5.22	5.34	5.51	5.70
		Amps	14.5	14.8	15.3	15.9	15.6	16.0	16.6	17.2	17.0	17.4	18.0	18.7	18.2	**18.7**	19.3	20.1	21.3	21.8	22.6	23.5	22.5	23.1	23.8	24.8
		Hi PR	249	268	272	278	274	294	298	305	320	344	349	357	365	**392**	398	407	411	441	448	458	474	510	517	529
		Lo PR	117	120	132	140	120	124	135	144	124	128	140	149	128	**132**	144	153	130	134	147	156	133	138	150	160
	1800	MBh	54.2	55.8	60.4	64.8	52.9	54.5	59.0	63.3	51.7	53.2	57.6	61.8	50.4	**51.9**	56.2	60.3	47.9	49.3	53.4	57.3	44.4	45.7	49.4	53.0
		S/T	0.77	0.69	0.52	0.34	0.80	0.72	0.54	0.35	0.82	0.74	0.56	0.36	0.85	**0.76**	0.57	0.37	0.88	0.79	0.60	0.38	0.89	0.79	0.60	0.39
		ΔT	21	20	16	11	22	20	16	11	22	20	16	11	22	**20**	16	11	22	20	16	11	20	19	15	10
		kW	4.01	4.09	4.22	4.35	4.31	4.40	4.54	4.69	4.58	4.67	4.82	4.98	4.81	**4.91**	5.07	5.24	5.01	5.12	5.29	5.46	5.18	5.30	5.47	5.65
		Amps	14.3	14.7	15.2	15.7	15.5	15.9	16.4	17.0	16.9	17.3	17.9	18.6	18.1	**18.5**	19.1	19.9	21.1	21.6	22.4	23.2	22.3	22.8	23.6	24.5
		Hi PR	247	265	269	275	271	291	296	302	317	341	346	354	361	**388**	394	403	406	437	443	453	470	505	512	523
		Lo PR	116	119	130	139	119	123	134	143	123	127	139	148	126	**130**	142	152	129	133	145	155	132	136	149	158
	1575	MBh	50.0	51.5	55.7	59.8	48.8	50.3	54.4	58.4	47.7	49.1	53.1	57.0	46.5	**47.9**	51.8	55.6	44.2	45.5	49.3	52.9	40.9	42.1	45.6	49.0
		S/T	0.75	0.67	0.51	0.32	0.77	0.69	0.52	0.34	0.79	0.71	0.54	0.35	0.82	**0.73**	0.55	0.36	0.85	0.76	0.58	0.37	0.86	0.77	0.58	0.37
		ΔT	22	20	16	11	22	20	17	11	22	20	17	11	22	**20**	17	12	22	20	17	11	20	19	15	11
		kW	3.98	4.06	4.19	4.32	4.28	4.37	4.50	4.65	4.54	4.64	4.78	4.94	4.77	**4.87**	5.03	5.20	4.97	5.08	5.24	5.41	5.14	5.25	5.42	5.60
		Amps	14.2	14.5	15.0	15.6	15.4	15.7	16.3	16.9	16.7	17.1	17.7	18.4	17.9	**18.3**	19.0	19.7	20.9	21.4	22.2	23.0	22.1	22.6	23.4	24.3
		Hi PR	244	263	266	272	268	288	293	299	314	338	342	350	358	**385**	390	399	402	433	439	448	465	500	507	518
		Lo PR	114	118	129	137	118	122	133	141	122	126	137	146	125	**129**	141	150	128	132	144	153	131	135	147	157

IDB: Entering Indoor Dry Bulb Temperature

High and low pressures are measured at the liquid and suction service valves.

Shaded area reflects ACCA (TVA) conditions

kW = Total system power

Amps = outdoor unit amps (comp.+fan)

Expanded Cooling Data — SSX140601A* / CA*F4860D6A* / .088 Orifice (cont.)

			Outdoor Ambient Temperature																							
			65ºF				75ºF				85ºF				95ºF				105ºF				115ºF			
			Entering Indoor Wet Bulb Temperature																							
IDB	Airflow		59	63	67	71	59	63	67	71	59	63	67	71	59	63	67	71	59	63	67	71	59	63	67	71
80	2025	MBh	56.8	58.0	62.0	66.3	55.5	56.7	60.6	64.7	54.2	55.3	59.1	63.2	52.8	54.0	57.7	61.7	50.2	51.3	54.8	58.6	46.5	47.5	50.8	54.3
		S/T	0.89	0.83	0.68	0.51	0.92	0.86	0.70	0.53	0.95	0.89	0.72	0.54	1.00	0.92	0.75	0.56	1.00	0.95	0.77	0.58	1.00	0.96	0.78	0.58
		ΔT	23	22	19	15	23	22	19	15	23	22	19	15	24	22	20	16	23	22	19	15	21	21	18	14
		kW	4.04	4.13	4.25	4.39	4.35	4.44	4.58	4.72	4.61	4.71	4.86	5.02	4.85	4.95	5.11	5.28	5.05	5.16	5.33	5.51	5.22	5.34	5.51	5.70
		Amps	14.5	14.8	15.3	15.9	15.6	16.0	16.6	17.2	17.0	17.4	18.0	18.7	18.2	18.7	19.3	20.1	21.3	21.8	22.6	23.5	22.5	23.1	23.8	24.8
		Hi PR	249	268	272	278	274	294	298	305	320	344	349	357	365	392	398	407	411	441	448	458	474	510	517	529
		Lo PR	117	120	132	140	120	124	135	144	124	128	140	149	128	132	144	153	130	134	147	156	133	138	150	160
	1800	MBh	55.1	56.3	60.2	64.4	53.9	55.0	58.8	62.9	52.6	53.7	57.4	61.4	51.3	52.4	**56.0**	59.9	48.7	49.8	53.2	56.9	45.1	46.1	49.3	52.7
		S/T	0.85	0.80	0.65	0.48	0.88	0.82	0.67	0.50	0.90	0.85	0.69	0.51	0.93	0.87	**0.71**	0.53	0.97	0.91	0.74	0.55	0.97	0.91	0.74	0.56
		ΔT	24	23	20	16	24	23	20	16	24	23	20	16	24	23	**20**	16	24	23	20	16	22	22	19	15
		kW	4.01	4.09	4.22	4.35	4.31	4.40	4.54	4.69	4.58	4.67	4.82	4.98	4.81	4.91	**5.07**	5.24	5.01	5.12	5.29	5.46	5.18	5.30	5.47	5.65
		Amps	14.3	14.7	15.2	15.7	15.5	15.9	16.4	17.0	16.9	17.3	17.9	18.6	18.1	18.5	**19.1**	19.9	21.1	21.6	22.4	23.2	22.3	22.8	23.6	24.5
		Hi PR	247	265	269	275	271	291	296	302	317	341	346	354	361	388	**394**	403	406	437	443	453	470	505	512	523
		Lo PR	116	119	130	139	119	123	134	143	123	127	139	148	126	130	**142**	152	129	133	145	155	132	136	149	158
	1575	MBh	50.9	52.0	55.6	59.4	49.7	50.8	54.3	58.0	48.5	49.6	53.0	56.6	47.3	48.4	51.7	55.3	45.0	46.0	49.1	52.5	41.7	42.6	45.5	48.6
		S/T	0.82	0.77	0.62	0.47	0.85	0.80	0.65	0.48	0.87	0.82	0.66	0.50	0.90	0.84	0.69	0.51	0.93	0.87	0.71	0.53	0.94	0.88	0.72	0.54
		ΔT	24	23	20	16	25	24	21	16	25	24	21	16	25	24	21	17	24	23	20	16	23	22	19	15
		kW	3.98	4.06	4.19	4.32	4.28	4.37	4.50	4.65	4.54	4.64	4.78	4.94	4.77	4.87	5.03	5.20	4.97	5.08	5.24	5.41	5.14	5.25	5.42	5.60
		Amps	14.2	14.5	15.0	15.6	15.4	15.7	16.3	16.9	16.7	17.1	17.7	18.4	17.9	18.3	19.0	19.7	20.9	21.4	22.2	23.0	22.1	22.6	23.4	24.3
		Hi PR	244	263	266	272	268	288	293	299	314	338	342	350	358	385	390	399	402	433	439	448	465	500	507	518
		Lo PR	114	118	129	137	118	122	133	141	122	126	137	146	125	129	141	150	128	132	144	153	131	135	147	157
85	2025	MBh	57.8	58.9	61.7	65.8	56.4	57.5	60.3	64.3	55.1	56.2	58.8	62.8	53.8	54.8	57.4	61.2	51.1	52.1	54.5	58.2	47.3	48.2	50.5	53.9
		S/T	0.93	0.90	0.81	0.66	0.97	0.93	0.84	0.68	0.99	0.96	0.86	0.70	1.00	0.99	0.89	0.72	1.00	1.00	0.92	0.75	1.00	1.00	0.93	0.76
		ΔT	24	24	23	20	25	24	23	20	25	24	23	20	24	25	23	20	23	24	23	20	21	22	21	19
		kW	4.04	4.13	4.25	4.39	4.35	4.44	4.58	4.72	4.61	4.71	4.86	5.02	4.85	4.95	5.11	5.28	5.05	5.16	5.33	5.51	5.22	5.34	5.51	5.70
		Amps	14.5	14.8	15.3	15.9	15.6	16.0	16.6	17.2	17.0	17.4	18.0	18.7	18.2	18.7	19.3	20.1	21.3	21.8	22.6	23.5	22.5	23.1	23.8	24.8
		Hi PR	249	268	272	278	274	294	298	305	320	344	349	357	365	392	398	407	411	441	448	458	474	510	517	529
		Lo PR	117	120	132	140	120	124	135	144	124	128	140	149	128	132	144	153	130	134	147	156	133	138	150	160
	1800	MBh	56.1	57.2	59.9	63.9	54.8	55.9	58.5	62.4	53.5	54.5	57.1	60.9	52.2	53.2	55.7	59.4	49.6	50.5	52.9	56.5	45.9	46.8	49.0	52.3
		S/T	0.89	0.86	0.77	0.63	0.92	0.89	0.80	0.65	0.95	0.91	0.82	0.67	0.98	0.94	0.85	0.69	1.00	0.98	0.88	0.72	1.00	0.99	0.89	0.72
		ΔT	25	25	24	21	26	25	24	21	26	25	24	21	26	26	24	21	25	25	24	21	23	24	22	19
		kW	4.01	4.09	4.22	4.35	4.31	4.40	4.54	4.69	4.58	4.67	4.82	4.98	4.81	4.91	5.07	5.24	5.01	5.12	5.29	5.46	5.18	5.30	5.47	5.65
		Amps	14.3	14.7	15.2	15.7	15.5	15.9	16.4	17.0	16.9	17.3	17.9	18.6	18.1	18.5	19.1	19.9	21.1	21.6	22.4	23.2	22.3	22.8	23.6	24.5
		Hi PR	247	265	269	275	271	291	296	302	317	341	346	354	361	388	394	403	406	437	443	453	470	505	512	523
		Lo PR	116	119	130	139	119	123	134	143	123	127	139	148	126	130	142	152	129	133	145	155	132	136	149	158
	1575	MBh	51.8	52.8	55.3	59.0	50.6	51.6	54.0	57.6	49.4	50.3	52.7	56.2	48.2	49.1	51.4	54.9	45.8	46.7	48.9	52.1	42.4	43.2	45.3	48.3
		S/T	0.86	0.83	0.75	0.61	0.89	0.86	0.77	0.63	0.91	0.88	0.79	0.64	0.94	0.91	0.82	0.66	0.98	0.94	0.85	0.69	0.98	0.95	0.86	0.70
		ΔT	26	26	24	21	26	26	24	21	26	26	24	21	26	26	25	21	26	26	24	21	24	24	23	20
		kW	3.98	4.06	4.19	4.32	4.28	4.37	4.50	4.65	4.54	4.64	4.78	4.94	4.77	4.87	5.03	5.20	4.97	5.08	5.24	5.41	5.14	5.25	5.42	5.60
		Amps	14.2	14.5	15.0	15.6	15.4	15.7	16.3	16.9	16.7	17.1	17.7	18.4	17.9	18.3	19.0	19.7	20.9	21.4	22.2	23.0	22.1	22.6	23.4	24.3
		Hi PR	244	263	266	272	268	288	293	299	314	338	342	350	358	385	390	399	402	433	439	448	465	500	507	518
		Lo PR	114	118	129	137	118	122	133	141	122	126	137	146	125	129	141	150	128	132	144	153	131	135	147	157

IDB: Entering Indoor Dry Bulb Temperature

High and low pressures are measured at the liquid and suction service valves.

Shaded area reflects AHRI (TVA) conditions

kW = Total system power

Amps = outdoor unit amps (comp.+fan)

AHRI RATINGS

OUTDOOR UNIT	INDOOR UNITS		COOLING CAPACITY (BTU/H)				AHRI #
	COILS & AIR HANDLERS	FURNACES/BLOWERS	TOTAL	SENSIBLE	SEER[1]	EER[2]	
SSX14 0181A*	ASPF183016C*+TXV		18,000	12,800	15.0	12.5	4244348
	CA*F3131*6B*+TXV	A*VC950714CXA*	18,000	12,800	15.0	12.5	4586396
	CA*F3131*6B*+TXV	G*VC950714CXA*	18,000	12,800	15.0	12.5	4201747
	CA*F3131*6C*+TXV	A*VC950714CXA*	18,000	12,800	15.0	12.5	4586397
	CA*F3131*6C*+TXV	G*VC950714CXA*	18,000	12,800	15.0	12.5	4201748
	CA*F3131*6D*+TXV	A*VC950714CXA*	18,000	12,800	15.0	12.5	4586398
	CA*F3131*6D*+TXV	G*VC950714CXA*	18,000	12,800	15.0	12.5	4385584
	CHPF2430B6B*+TXV	A*VC950714CXA*	18,000	12,800	15.0	12.5	4586399
	CHPF2430B6B*+TXV	G*VC950714CXA*	18,000	12,800	15.0	12.5	4201749
	CHPF2430B6C*+TXV	A*VC950714CXA*	18,000	12,800	15.0	12.5	4586400
	CHPF2430B6C*+TXV	G*VC950714CXA*	18,000	12,800	15.0	12.5	4201750
	CSCF3036N6B*+TXV	A*VC950714CXA*	18,400	13,100	15.0	12.5	4586401
	CSCF3036N6B*+TXV	G*VC950714CXA*	18,400	13,100	15.0	12.5	4201751
	CT*F3131*6A*+TXV	A*VC950714CXA*	18,000	12,800	15.0	12.5	4586402
	CT*F3131*6A*+TXV	G*VC950714CXA*	18,000	12,800	15.0	12.5	4201752
SSX14 0181B*	AEPF183016C*+TXV		18,000	12,800	15.0	12.5	3456795
	AR*F193116B*+TXV		18,000	12,800	14.0	12.0	3456796
	AR*F193116C*+TXV		18,000	12,800	14.0	12.0	4261910
	ASPF183016B*+TXV		18,000	12,800	15.0	12.5	3456797
	ASPF183016C*+TXV		18,000	12,800	15.0	12.5	4244349
	ASPF183016D*+TXV		18,000	12,800	15.0	12.5	4149266
	ASPF183016E*+TXV		18,000	12,800	15.0	12.5	4244350
	AT*F193116A*+TXV		18,000	12,800	14.0	12.0	3456798
	AVPTC183014A*		18,000	12,800	15.0	12.5	4431244
	AWUF31XX16A*		17,400	12,400	14.5	12.0	3629343
	AWUF32XX16A*		17,400	12,400	14.5	12.0	4399562
	CA*F1824*6B*	G*VC950453BXA*	17,000	12,100	14.0	12.0	4588710
	CA*F1824*6B*	A*VC950453BXA*	17,000	12,100	14.0	12.0	3635254
	CA*F1824*6D*	G*VC950453BXA*	17,000	12,100	14.0	12.0	4588711
	CA*F1824*6D*	A*VC950453BXA*	17,000	12,100	14.0	12.0	4150285
	CA*F3131*6B*+EEP+TXV		18,000	12,800	14.0	12.0	3456799
	CA*F3131*6B*+TXV	G*VC90704CXA*	18,000	12,800	15.0	12.5	4588712
	CA*F3131*6B*+TXV	G*VC950714CXA*	18,000	12,800	15.0	12.5	4201754
	CA*F3131*6B*+TXV	A*VC950714CXA*	18,000	12,800	15.0	12.5	4201753
	CA*F3131*6B*+TXV	G*E80703B**	18,400	13,100	15.0	12.5	3603204
	CA*F3131*6B*+TXV	G*E80704B**	18,400	13,100	15.0	12.5	3456801
	CA*F3131*6B*+TXV	A*VC950704CXA*	18,000	12,800	15.0	12.5	3607294
	CA*F3131*6B*+TXV	A*VC950453BXA*	18,400	13,100	15.0	12.5	3607292
	CA*F3131*6B*+TXV	A*VC90704CXA*	18,000	12,800	15.0	12.5	3607270
	CA*F3131*6B*+TXV	G*VC950704CXA*	18,000	12,800	15.0	12.5	3598174
	CA*F3131*6B*+TXV	G*VC950453BXA*	18,400	13,100	15.0	12.5	3597979
	CA*F3131*6B*+TXV	G*V950704C**	18,000	12,800	15.0	12.5	3456803
	CA*F3131*6B*+TXV	G*V950453B**	18,400	13,100	15.0	12.5	3456802
	CA*F3131*6B*+TXV	MBE1200**-1B*	18,400	13,100	15.0	12.5	3456800
	CA*F3131*6C*+EEP+TXV		18,000	12,800	14.0	12.0	3456804
	CA*F3131*6C*+TXV	A*VC80704BXA*	18,400	13,100	15.0	12.5	4588864
	CA*F3131*6C*+TXV	G*VC90704CXA*	18,000	12,800	15.0	12.5	4588713
	CA*F3131*6C*+TXV	G*V950704CXA*	18,000	12,800	15.0	12.5	4588715
	CA*F3131*6C*+TXV	G*V950453BX**	18,400	13,100	15.0	12.5	4588714
	CA*F3131*6C*+TXV	MBVC1200**-1A*	18,400	13,100	15.0	12.5	3609459
	CA*F3131*6C*+TXV	G*VC80704BXA*	18,400	13,100	15.0	12.5	4392939
	CA*F3131*6C*+TXV	G*VC950714CXA*	18,000	12,800	15.0	12.5	4201756

See Notes on Page 57.

AHRI RATINGS (CONT.)

OUTDOOR UNIT	INDOOR UNITS		COOLING CAPACITY (BTU/H)				AHRI #
	COILS & AIR HANDLERS	FURNACES/BLOWERS	TOTAL	SENSIBLE	SEER[1]	EER[2]	
SSX14 0181B* (cont.)	CA*F3131*6C*+TXV	A*VC950714CXA*	18,000	12,800	15.0	12.5	4201755
	CA*F3131*6C*+TXV	G*E80703B**	18,400	13,100	15.0	12.5	3603217
	CA*F3131*6C*+TXV	G*E80704B**	18,400	13,100	15.0	12.5	3456806
	CA*F3131*6C*+TXV	A*VC950704CXA*	18,000	12,800	15.0	12.5	3607295
	CA*F3131*6C*+TXV	A*VC90704CXA*	18,000	12,800	15.0	12.5	3607272
	CA*F3131*6C*+TXV	A*VC950453BXA*	18,400	13,100	15.0	12.5	3607271
	CA*F3131*6C*+TXV	G*VC950704CXA*	18,000	12,800	15.0	12.5	3598175
	CA*F3131*6C*+TXV	G*VC950453BXA*	18,400	13,100	15.0	12.5	3597980
	CA*F3131*6C*+TXV	G*V950704C**	18,000	12,800	15.0	12.5	3456808
	CA*F3131*6C*+TXV	G*V950453B**	18,400	13,100	15.0	12.5	3456807
	CA*F3131*6C*+TXV	MBE1200**-1B*	18,400	13,100	15.0	12.5	3456805
	CA*F3131*6D*+EEP+TXV		18,000	12,800	14.0	12.0	4385560
	CA*F3131*6D*+TXV	A*VC80704BXA*	18,400	13,100	15.0	12.5	4588865
	CA*F3131*6D*+TXV	G*VC90704CXA*	18,000	12,800	15.0	12.5	4588716
	CA*F3131*6D*+TXV	MBVC1200**-1A*	18,400	13,100	15.0	12.5	4385561
	CA*F3131*6D*+TXV	G*VC80704BXA*	18,400	13,100	15.0	12.5	4559581
	CA*F3131*6D*+TXV	G*VC950704CXA*	18,000	12,800	15.0	12.5	4385591
	CA*F3131*6D*+TXV	A*VC950704CXA*	18,000	12,800	15.0	12.5	4385590
	CA*F3131*6D*+TXV	A*VC90704CXA*	18,000	12,800	15.0	12.5	4385589
	CA*F3131*6D*+TXV	A*VC950453BXA*	18,400	13,100	15.0	12.5	4385588
	CA*F3131*6D*+TXV	G*VC950714CXA*	18,000	12,800	15.0	12.5	4385587
	CA*F3131*6D*+TXV	A*VC950714CXA*	18,000	12,800	15.0	12.5	4385586
	CA*F3131*6D*+TXV	G*VC950453BXA*	18,400	13,100	15.0	12.5	4385585
	CA*F3636*6C*+EEP+TXV		18,000	12,800	14.0	12.0	3456811
	CA*F3636*6C*+TXV	MBVC1200**-1A*	18,400	13,100	15.0	12.5	3609461
	CA*F3636*6C*+TXV	MBE1200**-1B*	18,400	13,100	15.0	12.5	3456812
	CA*F3636*6D*+EEP+TXV		18,000	12,800	14.0	12.0	4392770
	CA*F3636*6D*+TXV	MBVC1200**-1A*	18,400	13,100	15.0	12.5	4392771
	CA*F3743*6A*+EEP+TXV		18,400	13,100	14.5	12.2	3456813
	CA*F3743*6A*+TXV	G*VC90704CXA*	18,000	12,800	15.0	12.5	4588717
	CA*F3743*6A*+TXV	G*V950704CXA*	18,000	12,800	15.0	12.5	4588719
	CA*F3743*6A*+TXV	G*V950453BX**	18,000	12,800	15.0	12.5	4588718
	CA*F3743*6A*+TXV	G*VC950714CXA*	18,000	12,800	15.0	12.5	4201758
	CA*F3743*6A*+TXV	A*VC950714CXA*	18,000	12,800	15.0	12.5	4201757
	CA*F3743*6A*+TXV	A*VC90704CXA*	18,000	12,800	15.0	12.5	3607296
	CA*F3743*6A*+TXV	A*VC950704CXA*	18,000	12,800	15.0	12.5	3607289
	CA*F3743*6A*+TXV	A*VC950453BXA*	18,000	12,800	15.0	12.5	3607288
	CA*F3743*6A*+TXV	G*VC950704CXA*	18,000	12,800	15.0	12.5	3598176
	CA*F3743*6A*+TXV	G*VC950453BXA*	18,000	12,800	15.0	12.5	3597960
	CA*F3743*6A*+TXV	G*V950704C**	18,000	12,800	15.0	12.5	3487892
	CA*F3743*6A*+TXV	G*V950453B**	18,000	12,800	15.0	12.5	3487891
	CA*F3743*6D*+EEP+TXV		18,400	13,100	14.5	12.2	4415026
	CA*F3743*6D*+TXV	G*VC90704CXA*	18,000	12,800	15.0	12.5	4589798
	CA*F3743*6D*+TXV	G*VC950714CXA*	18,000	12,800	15.0	12.5	4415072
	CA*F3743*6D*+TXV	G*VC950704CXA*	18,000	12,800	15.0	12.5	4415071
	CA*F3743*6D*+TXV	G*VC950453BXA*	18,000	12,800	15.0	12.5	4415070
	CA*F3743*6D*+TXV	A*VC950714CXA*	18,000	12,800	15.0	12.5	4415069
	CA*F3743*6D*+TXV	A*VC950704CXA*	18,000	12,800	15.0	12.5	4415068
	CA*F3743*6D*+TXV	A*VC950453BXA*	18,000	12,800	15.0	12.5	4415067
	CA*F3743*6D*+TXV	A*VC90704CXA*	18,000	12,800	15.0	12.5	4415066
	CHPF2430B6B*+TXV	A*VC950714CXA*	18,000	12,800	15.0	12.5	4586403
	CHPF2430B6B*+TXV	G*VC950714CXA*	18,000	12,800	15.0	12.5	4201759
	CHPF2430B6C*+EEP+TXV		18,000	12,800	14.0	12.0	3456819
	CHPF2430B6C*+TXV	A*VC80704BXA*	18,000	12,800	15.0	12.5	4588866

See Notes on Page 31

AHRI RATINGS (CONT.)

OUTDOOR UNIT	INDOOR UNITS		COOLING CAPACITY (BTU/H)				AHRI #
	COILS & AIR HANDLERS	FURNACES/BLOWERS	TOTAL	SENSIBLE	SEER[1]	EER[2]	
SSX14 0181B* (cont.)	CHPF2430B6C*+TXV	G*VC90704CXA*	18,000	12,800	15.0	12.5	4588720
	CHPF2430B6C*+TXV	G*V950704CXA*	18,000	12,800	15.0	12.5	4588722
	CHPF2430B6C*+TXV	G*V950453BX**	18,000	12,800	15.0	12.5	4588721
	CHPF2430B6C*+TXV	MBVC1200**-1A*	18,000	12,800	15.0	12.5	3609463
	CHPF2430B6C*+TXV	G*VC80704BXA*	18,000	12,800	15.0	12.5	4392940
	CHPF2430B6C*+TXV	G*VC950714CXA*	18,000	12,800	15.0	12.5	4201761
	CHPF2430B6C*+TXV	A*VC950714CXA*	18,000	12,800	15.0	12.5	4201760
	CHPF2430B6C*+TXV	G*E80703B**	18,000	12,800	15.0	12.5	3603249
	CHPF2430B6C*+TXV	G*E80704B**	18,000	12,800	15.0	12.5	3456821
	CHPF2430B6C*+TXV	A*VC90704CXA*	18,000	12,800	15.0	12.5	3607297
	CHPF2430B6C*+TXV	A*VC950453BXA*	18,000	12,800	15.0	12.5	3607291
	CHPF2430B6C*+TXV	A*VC950704CXA*	18,000	12,800	15.0	12.5	3607273
	CHPF2430B6C*+TXV	G*VC950704CXA*	18,000	12,800	15.0	12.5	3598178
	CHPF2430B6C*+TXV	G*VC950453BXA*	18,000	12,800	15.0	12.5	3597962
	CHPF2430B6C*+TXV	G*V950704C**	18,000	12,800	15.0	12.5	3456823
	CHPF2430B6C*+TXV	G*V950453B**	18,000	12,800	15.0	12.5	3456822
	CHPF2430B6C*+TXV	MBE1200**-1B*	18,000	12,800	15.0	12.5	3456820
	CHPF3636B6C*+EEP+TXV		18,400	13,100	14.5	12.2	3456825
	CSCF3036N6B*+EEP+TXV		18,400	13,100	14.0	12.0	3456826
	CSCF3036N6B*+TXV	A*VC80704BXA*	18,400	13,100	15.0	12.5	4588867
	CSCF3036N6B*+TXV	G*VC90704CXA*	18,400	13,100	15.0	12.5	4588723
	CSCF3036N6B*+TXV	G*V950704CXA*	18,400	13,100	15.0	12.5	4588725
	CSCF3036N6B*+TXV	G*V950453BX**	18,400	13,100	15.0	12.5	4588724
	CSCF3036N6B*+TXV	G*VC80704BXA*	18,400	13,100	15.0	12.5	4392941
	CSCF3036N6B*+TXV	G*VC950714CXA*	18,400	13,100	15.0	12.5	4201763
	CSCF3036N6B*+TXV	A*VC950714CXA*	18,400	13,100	15.0	12.5	4201762
	CSCF3036N6B*+TXV	G*E80703B**	18,400	13,100	15.0	12.5	3603205
	CSCF3036N6B*+TXV	G*E80704B**	18,400	13,100	15.0	12.5	3456829
	CSCF3036N6B*+TXV	A*VC950704CXA*	18,400	13,100	15.0	12.5	3607298
	CSCF3036N6B*+TXV	A*VC90704CXA*	18,400	13,100	15.0	12.5	3607275
	CSCF3036N6B*+TXV	A*VC950453BXA*	18,400	13,100	15.0	12.5	3607274
	CSCF3036N6B*+TXV	G*VC950704CXA*	18,400	13,100	15.0	12.5	3598184
	CSCF3036N6B*+TXV	G*VC950453BXA*	18,400	13,100	15.0	12.5	3597981
	CSCF3036N6B*+TXV	G*V950704C**	18,400	13,100	15.0	12.5	3456828
	CSCF3036N6B*+TXV	G*V950453B**	18,400	13,100	15.0	12.5	3456827
	CSCF3642N6C*+EEP+TXV		18,400	13,100	14.5	12.2	3456830
	CT*F3131*6A*+EEP+TXV		18,000	12,800	14.0	12.0	3456831
	CT*F3131*6A*+TXV	A*VC950704CXA*	18,000	12,800	15.0	12.5	4588869
	CT*F3131*6A*+TXV	A*VC950453BXA*	18,400	13,100	15.0	12.5	4588868
	CT*F3131*6A*+TXV	G*V950704CXA*	18,000	12,800	15.0	12.5	4588727
	CT*F3131*6A*+TXV	G*V950453BX**	18,400	13,100	15.0	12.5	4588726
	CT*F3131*6A*+TXV	A*VC950714CXA*	18,000	12,800	15.0	12.5	4586404
	CT*F3131*6A*+TXV	G*VC950714CXA*	18,000	12,800	15.0	12.5	4201764
	CT*F3131*6A*+TXV	G*E80703B**	18,400	13,100	15.0	12.5	3603212
	CT*F3131*6A*+TXV	G*E80704B**	18,400	13,100	15.0	12.5	3456833
	CT*F3131*6A*+TXV	MBVC1200**-1A*	18,400	13,100	15.0	12.5	3609464
	CT*F3131*6A*+TXV	G*VC950704CXA*	18,000	12,800	15.0	12.5	3598179
	CT*F3131*6A*+TXV	G*VC950453BXA*	18,400	13,100	15.0	12.5	3597982
	CT*F3131*6A*+TXV	G*V950704C**	18,000	12,800	15.0	12.5	3456835
	CT*F3131*6A*+TXV	G*V950453B**	18,400	13,100	15.0	12.5	3456834
	CT*F3131*6A*+TXV	MBE1200**-1B*	18,400	13,100	15.0	12.5	3456832
	CT*F3636*6A*+TXV	MBVC1200**-1A*	18,400	13,100	15.0	12.5	3609465
	CT*F3636*6A*+TXV	MBE1200**-1B*	18,400	13,100	15.0	12.5	3456836

See Notes on Page 57.

AHRI RATINGS (CONT.)

OUTDOOR UNIT	INDOOR UNITS		COOLING CAPACITY (BTU/H)				AHRI #
	COILS & AIR HANDLERS	FURNACES/BLOWERS	TOTAL	SENSIBLE	SEER[1]	EER[2]	
SSX14 0241A*	CA*F3636*6B*	A*VC950714CXA*	23,600	17,200	15.0	12.5	4586405
	CA*F3636*6B*	G*VC950714CXA*	23,600	17,200	15.0	12.5	4201765
	CA*F3636*6C*	A*VC950714CXA*	23,600	17,200	15.0	12.5	4586406
	CA*F3636*6C*	G*VC950714CXA*	23,600	17,200	15.0	12.5	4201766
	CA*F3636*6D*	A*VC950714CXA*	23,600	17,200	15.0	12.5	4586407
	CA*F3636*6D*	G*VC950714CXA*	23,600	17,200	15.0	12.5	4392772
	CA*F3642*6B*	A*VC950714CXA*	23,600	17,200	15.0	12.5	4586408
	CA*F3642*6B*	G*VC950714CXA*	23,600	17,200	15.0	12.5	4201767
	CA*F3642*6C*	A*VC950714CXA*	23,600	17,200	15.0	12.5	4586409
	CA*F3642*6C*	G*VC950714CXA*	23,600	17,200	15.0	12.5	4201768
	CA*F3642*6D*	A*VC950714CXA*	23,600	17,200	15.0	12.5	4586410
	CA*F3642*6D*	G*VC950714CXA*	23,600	17,200	15.0	12.5	4201769
	CA*F3743*6A*	A*VC950714CXA*	23,600	17,200	15.0	12.5	4586411
	CA*F3743*6A*	G*VC950714CXA*	23,600	17,200	15.0	12.5	4201770
	CA*F3743*6D*	A*VC950714CXA*	23,600	17,200	15.0	12.5	4586412
	CA*F3743*6D*	G*VC950714CXA*	23,600	17,200	15.0	12.5	4415073
	CHPF3636B6B*	A*VC950714CXA*	23,600	17,200	15.0	12.5	4586413
	CHPF3636B6B*	G*VC950714CXA*	23,600	17,200	15.0	12.5	4201771
	CHPF3636B6C*	A*VC950714CXA*	23,600	17,200	15.0	12.5	4586414
	CHPF3636B6C*	G*VC950714CXA*	23,600	17,200	15.0	12.5	4201772
	CHPF3642C6B*	A*VC950714CXA*	23,600	17,200	15.0	12.5	4586415
	CHPF3642C6B*	G*VC950714CXA*	23,600	17,200	15.0	12.5	4201773
	CHPF3642C6C*	A*VC950714CXA*	23,600	17,200	15.0	12.5	4586416
	CHPF3642C6C*	G*VC950714CXA*	23,600	17,200	15.0	12.5	4201774
	CSCF3036N6B*	A*VC950714CXA*	23,600	17,200	14.5	12.2	4586417
	CSCF3036N6B*	G*VC950714CXA*	23,600	17,200	14.5	12.2	4201775
	CT*F3636*6A*	A*VC950714CXA*	23,600	17,200	15.0	12.5	4586418
	CT*F3636*6A*	G*VC950714CXA*	23,600	17,200	15.0	12.5	4201776
	CT*F3642*6A*	A*VC950714CXA*	23,600	17,200	15.0	12.5	4586419
	CT*F3642*6A*	G*VC950714CXA*	23,600	17,200	15.0	12.5	4201777
SSX14 0241B*	AEPF313716A*		24,000	17,500	15.0	12.5	3456838
	AR*F193116B*		24,000	17,500	14.0	12.0	3456839
	AR*F193116C*		24,000	17,500	14.0	12.0	4260515
	ASPF313716C*		24,000	17,500	15.0	12.5	4355448
	ASPF313716D*		24,000	17,500	15.0	12.5	4149267
	ASPF313716E*		24,000	17,500	15.0	12.5	4355455
	AT*F193116A*		24,000	17,500	14.0	12.0	3456842
	AVPTC313714A*		24,000	17,500	15.0	12.5	4431251
	AWUF31XX16A*		23,000	16,800	14.5	12.0	3629344
	AWUF32XX16A*		23,000	16,800	14.5	12.0	3629345
	CA*F3636*6B*	A*VC950714CXA*	23,600	17,200	15.0	12.5	4586420
	CA*F3636*6B*	G*VC950714CXA*	23,600	17,200	15.0	12.5	4201778
	CA*F3636*6C*	G*VC90905DXA*	23,600	17,200	15.0	12.5	4588729
	CA*F3636*6C*	G*VC90704CXA*	23,800	17,400	14.5	12.2	3597651
	CA*F3636*6C*	G*V950704CXA*	23,600	17,200	15.0	12.5	4588735
	CA*F3636*6C*	G*V950453BX**	23,600	17,200	15.0	12.5	4588734
	CA*F3636*6C*	G*V90704CX**	23,800	17,400	14.5	12.2	4588733
	CA*F3636*6C*	G*VC950915DXA*	23,600	17,200	15.0	12.5	4588732
	CA*F3636*6C*	G*VC950905DXA*	23,600	17,200	15.0	12.5	4588731
	CA*F3636*6C*	G*VC950905CXA*	23,600	17,200	15.0	12.5	4588730
	CA*F3636*6C*	A*V80704BX**	23,600	17,200	15.0	12.5	4588728
	CA*F3636*6C*	A*VC950915DXA*	23,600	17,200	15.0	12.5	4201799

See Notes on Page 57.

AHRI RATINGS (CONT.)

OUTDOOR UNIT	INDOOR UNITS		COOLING CAPACITY (BTU/H)				AHRI #
	COILS & AIR HANDLERS	FURNACES/BLOWERS	TOTAL	SENSIBLE	SEER[1]	EER[2]	
SSX14 0241B* (cont.)	CA*F3636*6C*	G*VC950714CXA*	23,600	17,200	15.0	12.5	4201780
	CA*F3636*6C*	A*VC950714CXA*	23,600	17,200	15.0	12.5	4201779
	CA*F3636*6C*	A*VC950905CXA*	23,600	17,200	15.0	12.5	4201284
	CA*F3636*6C*	G*E80703B**	23,600	17,200	15.0	12.5	3603213
	CA*F3636*6C*	G*VC80704BXA*	23,600	17,200	15.0	12.5	3723921
	CA*F3636*6C*	A*VC950905DXA*	23,600	17,200	15.0	12.5	3635259
	CA*F3636*6C*	A*VC90905DXA*	23,600	17,200	15.0	12.5	3635256
	CA*F3636*6C*	A*VC80704BXA*	23,600	17,200	15.0	12.5	3629568
	CA*F3636*6C*	G*E80704B**	23,600	17,200	15.0	12.5	3456851
	CA*F3636*6C*	A*VC950704CXA*	23,600	17,200	15.0	12.5	3607278
	CA*F3636*6C*	A*VC90704CXA*	23,600	17,200	15.0	12.5	3607277
	CA*F3636*6C*	A*VC950453BXA*	23,600	17,200	15.0	12.5	3607276
	CA*F3636*6C*	G*VC950704CXA*	23,600	17,200	15.0	12.5	3598241
	CA*F3636*6C*	G*VC950453BXA*	23,600	17,200	15.0	12.5	3598038
	CA*F3636*6C*	G*V950704C**	23,600	17,200	15.0	12.5	3456854
	CA*F3636*6C*	G*V950453B**	23,600	17,200	15.0	12.5	3456853
	CA*F3636*6C*	G*V90704C**	23,800	17,400	14.5	12.2	3456852
	CA*F3636*6C*	A*V80704B**	23,600	17,200	15.0	12.5	3456850
	CA*F3636*6C*+EEP		24,000	17,500	14.0	12.0	3456855
	CA*F3636*6C*	MBE1200**-1B*	24,000	17,500	15.0	12.5	3456856
	CA*F3636*6C*	MBVC1200**-1A*	24,000	17,500	15.0	12.5	3609466
	CA*F3636*6D*	G*VC90905DXA*	23,600	17,200	15.0	12.5	4588736
	CA*F3636*6D*	G*VC90704CXA*	23,600	17,200	14.5	12.5	4392785
	CA*F3636*6D*	G*VC950915DXA*	23,600	17,200	15.0	12.5	4588739
	CA*F3636*6D*	G*VC950905DXA*	23,600	17,200	15.0	12.5	4588738
	CA*F3636*6D*	G*VC950905CXA*	23,600	17,200	15.0	12.5	4588737
	CA*F3636*6D*	G*VC950714CXA*	23,600	17,200	15.0	12.5	4392788
	CA*F3636*6D*	G*VC950704CXA*	23,600	17,200	15.0	12.5	4392787
	CA*F3636*6D*	G*VC950453BXA*	23,600	17,200	15.0	12.5	4392786
	CA*F3636*6D*	G*VC80704BXA*	23,600	17,200	15.0	12.5	4392784
	CA*F3636*6D*	A*VC950915DXA*	23,600	17,200	15.0	12.5	4392781
	CA*F3636*6D*	A*VC950905DXA*	23,600	17,200	15.0	12.5	4392780
	CA*F3636*6D*	A*VC950905CXA*	23,600	17,200	15.0	12.5	4392779
	CA*F3636*6D*	A*VC950714CXA*	23,600	17,200	15.0	12.5	4392778
	CA*F3636*6D*	A*VC950704CXA*	23,600	17,200	15.0	12.5	4392777
	CA*F3636*6D*	A*VC950453BXA*	23,600	17,200	15.0	12.5	4392776
	CA*F3636*6D*	A*VC90905DXA*	23,600	17,200	15.0	12.5	4392775
	CA*F3636*6D*	A*VC90704CXA*	23,600	17,200	15.0	12.5	4392774
	CA*F3636*6D*	A*VC80704BXA*	23,600	17,200	15.0	12.5	4392773
	CA*F3636*6D*	G*E80704B**	23,600	17,200	15.0	12.5	4392783
	CA*F3636*6D*	G*E80703B**	23,600	17,200	15.0	12.5	4392782
	CA*F3636*6D*+EEP		24,000	17,500	14.0	12.0	4392789
	CA*F3636*6D*	MBVC1200**-1A*	24,000	17,500	15.0	12.5	4392790
	CA*F3642*6B*	A*VC950714CXA*	23,600	17,200	15.0	12.5	4586421
	CA*F3642*6B*	G*VC950714CXA*	23,600	17,200	15.0	12.5	4201781
	CA*F3642*6C*	A*VC81155CXA*	23,600	17,200	15.0	12.5	4588870
	CA*F3642*6C*	G*VC90704CXA*	23,600	17,200	15.0	12.5	4588740
	CA*F3642*6C*	G*V950704CXA*	23,600	17,200	15.0	12.5	4588741
	CA*F3642*6C*	G*VC81155CXA*	23,600	17,200	15.0	12.5	4392942
	CA*F3642*6C*	G*VC950714CXA*	23,600	17,200	15.0	12.5	4201783
	CA*F3642*6C*	A*VC950714CXA*	23,600	17,200	15.0	12.5	4201782
	CA*F3642*6C*	A*VC950704CXA*	23,600	17,200	15.0	12.5	3607299

See Notes on Page 57.

AHRI RATINGS (CONT.)

OUTDOOR UNIT	INDOOR UNITS		COOLING CAPACITY (BTU/H)				AHRI #
	COILS & AIR HANDLERS	FURNACES/BLOWERS	TOTAL	SENSIBLE	SEER[1]	EER[2]	
SSX14 0241B* (cont.)	CA*F3642*6C*	A*VC90704CXA*	23,600	17,200	15.0	12.5	3607279
	CA*F3642*6C*	G*VC950704CXA*	23,600	17,200	15.0	12.5	3598243
	CA*F3642*6C*	G*V950704C**	23,600	17,200	15.0	12.5	3456859
	CA*F3642*6C*+EEP		24,000	17,500	14.0	12.0	3456860
	CA*F3642*6D*	A*VC81155CXA*	23,600	17,200	15.0	12.5	4588871
	CA*F3642*6D*	G*VC90704CXA*	23,600	17,200	15.0	12.5	4588742
	CA*F3642*6D*	G*VC81155CXA*	23,600	17,200	15.0	12.5	4392943
	CA*F3642*6D*	G*VC950714CXA*	23,600	17,200	15.0	12.5	4201785
	CA*F3642*6D*	A*VC950714CXA*	23,600	17,200	15.0	12.5	4201784
	CA*F3642*6D*	G*VC950704CXA*	23,600	17,200	15.0	12.5	3880014
	CA*F3642*6D*	G*V950704CXA*	23,600	17,200	15.0	12.5	3880013
	CA*F3642*6D*	A*VC950704CXA*	23,600	17,200	15.0	12.5	3880012
	CA*F3642*6D*	A*VC90704CXA*	23,600	17,200	15.0	12.5	3880011
	CA*F3642*6D*+EEP		24,000	17,500	14.0	12.0	3880052
	CA*F3743*6A*	G*V950704CXA*	23,600	17,200	15.0	12.5	4588743
	CA*F3743*6A*	G*VC950714CXA*	23,600	17,200	15.0	12.5	4201787
	CA*F3743*6A*	A*VC950714CXA*	23,600	17,200	15.0	12.5	4201786
	CA*F3743*6A*	A*VC950704CXA*	23,600	17,200	15.0	12.5	3858173
	CA*F3743*6A*	G*VC950704CXA*	23,600	17,200	15.0	12.5	3598244
	CA*F3743*6A*	G*V950704C**	23,600	17,200	15.0	12.5	3456861
	CA*F3743*6A*+EEP		24,000	17,500	14.0	12.0	3456862
	CA*F3743*6A*+EEP+TXV		24,000	17,500	14.5	12.2	3456863
	CA*F3743*6A*+TXV	G*VC90704CXA*	23,600	17,200	15.0	12.5	4588744
	CA*F3743*6A*+TXV	G*V950453BX**	23,600	17,200	15.0	12.5	4588747
	CA*F3743*6A*+TXV	G*VC950714CXA*	23,600	17,200	15.0	12.5	4588746
	CA*F3743*6A*+TXV	G*VC950704CXA*	23,600	17,200	15.0	12.5	4588745
	CA*F3743*6A*+TXV	A*VC950714CXA*	23,600	17,200	15.0	12.5	4201788
	CA*F3743*6A*+TXV	A*VC950704CXA*	23,600	17,200	15.0	12.5	3635258
	CA*F3743*6A*+TXV	A*VC950453BXA*	23,600	17,200	15.0	12.5	3635257
	CA*F3743*6A*+TXV	A*VC90704CXA*	23,600	17,200	15.0	12.5	3635255
	CA*F3743*6A*+TXV	G*VC950453BXA*	23,600	17,200	15.0	12.5	3598039
	CA*F3743*6A*+TXV	G*V950453B**	23,600	17,200	15.0	12.5	3487919
	CA*F3743*6D*	A*VC950704CXA*	23,600	17,200	15.0	12.5	4588872
	CA*F3743*6D*	G*VC950714CXA*	23,600	17,200	15.0	12.5	4415076
	CA*F3743*6D*	G*VC950704CXA*	23,600	17,200	15.0	12.5	4415075
	CA*F3743*6D*	A*VC950714CXA*	23,600	17,200	15.0	12.5	4415074
	CA*F3743*6D*+EEP		24,000	17,500	14.0	12.0	4415077
	CA*F3743*6D*+EEP+TXV		24,000	17,500	14.5	12.2	4415078
	CA*F3743*6D*+TXV	G*VC950714CXA*	23,600	17,200	15.0	12.5	4589801
	CA*F3743*6D*+TXV	G*VC950704CXA*	23,600	17,200	15.0	12.5	4589800
	CA*F3743*6D*+TXV	G*VC90704CXA*	23,600	17,200	15.0	12.5	4589799
	CA*F3743*6D*+TXV	A*VC950714CXA*	23,600	17,200	15.0	12.5	4415155
	CA*F3743*6D*+TXV	A*VC950704CXA*	23,600	17,200	15.0	12.5	4415100
	CA*F3743*6D*+TXV	A*VC950453BXA*	23,600	17,200	15.0	12.5	4415099
	CA*F3743*6D*+TXV	A*VC90704CXA*	23,600	17,200	15.0	12.5	4415098
	CA*F3743*6D*+TXV	G*VC950453BXA*	23,600	17,200	15.0	12.5	4415083
	CHPF3636B6B*	A*VC950714CXA*	23,600	17,200	15.0	12.5	4586422
	CHPF3636B6B*	G*VC950714CXA*	23,600	17,200	15.0	12.5	4201789
	CHPF3636B6C*	A*VC80704BXA*	23,600	17,200	14.5	12.2	4588873
	CHPF3636B6C*	G*VC90704CXA*	23,600	17,200	15.0	12.5	4588748
	CHPF3636B6C*	G*V950704CXA*	23,600	17,200	15.0	12.5	4588750
	CHPF3636B6C*	G*V950453BX**	23,600	17,200	15.0	12.5	4588749

See Notes on Page 57.

AHRI RATINGS (CONT.)

OUTDOOR UNIT	INDOOR UNITS		COOLING CAPACITY (BTU/H)				AHRI #
	COILS & AIR HANDLERS	FURNACES/BLOWERS	TOTAL	SENSIBLE	SEER[1]	EER[2]	
SSX14 0241B* (cont.)	CHPF3636B6C*	G*VC80704BXA*	23,600	17,200	14.5	12.2	4392944
	CHPF3636B6C*	G*VC950714CXA*	23,600	17,200	15.0	12.5	4201791
	CHPF3636B6C*	A*VC950714CXA*	23,600	17,200	15.0	12.5	4201790
	CHPF3636B6C*	G*E80703B**	23,600	17,200	14.5	12.2	3603197
	CHPF3636B6C*	G*E80704B**	23,600	17,200	14.5	12.2	3456870
	CHPF3636B6C*	A*VC950704CXA*	23,600	17,200	15.0	12.5	3607300
	CHPF3636B6C*	A*VC90704CXA*	23,600	17,200	15.0	12.5	3607281
	CHPF3636B6C*	A*VC950453BXA*	23,600	17,200	15.0	12.5	3607280
	CHPF3636B6C*	G*VC950704CXA*	23,600	17,200	15.0	12.5	3598246
	CHPF3636B6C*	G*VC950453BXA*	23,600	17,200	15.0	12.5	3598041
	CHPF3636B6C*	G*V950704C**	23,600	17,200	15.0	12.5	3456872
	CHPF3636B6C*	G*V950453B**	23,600	17,200	15.0	12.5	3456871
	CHPF3636B6C*+EEP		24,000	17,500	14.0	12.0	3456873
	CHPF3636B6C*+EEP+TXV		24,000	17,500	14.5	12.2	3456874
	CHPF3636B6C*	MBE1200**-1B*	24,000	17,500	15.0	12.5	3456875
	CHPF3636B6C*	MBVC1200**-1A*	24,000	17,500	15.0	12.5	3609468
	CHPF3642C6B*	A*VC950714CXA*	23,600	17,200	15.0	12.5	4586423
	CHPF3642C6B*	G*VC950714CXA*	23,600	17,200	15.0	12.5	4201792
	CHPF3642C6C*	A*VC81155CXA*	23,000	16,800	15.0	12.5	4588875
	CHPF3642C6C*	A*VC80905CXA*	23,000	16,800	15.0	12.5	4588874
	CHPF3642C6C*	G*VC90704CXA*	23,600	17,200	15.0	12.5	4588751
	CHPF3642C6C*	G*V950704CXA*	23,600	17,200	15.0	12.5	4588752
	CHPF3642C6C*	G*VC81155CXA*	23,000	16,800	15.0	12.5	4392946
	CHPF3642C6C*	G*VC80905CXA*	23,000	16,800	15.0	12.5	4392945
	CHPF3642C6C*	G*VC950714CXA*	23,600	17,200	15.0	12.5	4201794
	CHPF3642C6C*	A*VC950714CXA*	23,600	17,200	15.0	12.5	4201793
	CHPF3642C6C*	A*VC950704CXA*	23,600	17,200	15.0	12.5	3607301
	CHPF3642C6C*	A*VC90704CXA*	23,600	17,200	15.0	12.5	3607282
	CHPF3642C6C*	G*VC950704CXA*	23,600	17,200	15.0	12.5	3598248
	CHPF3642C6C*	G*V950704C**	23,600	17,200	15.0	12.5	3456877
	CSCF3036N6B*	A*VC81155CXA*	23,600	17,200	15.0	12.5	4588878
	CSCF3036N6B*	A*VC80905CXA*	23,600	17,200	15.0	12.5	4588877
	CSCF3036N6B*	A*VC80704BXA*	23,600	17,200	14.5	12.2	4588876
	CSCF3036N6B*	G*VC90704CXA*	23,600	17,200	14.5	12.2	4588753
	CSCF3036N6B*	G*V950704CXA*	23,600	17,200	14.5	12.2	4588755
	CSCF3036N6B*	G*V950453BX**	23,600	17,200	14.5	12.2	4588754
	CSCF3036N6B*	G*VC81155CXA*	23,600	17,200	15.0	12.5	4392949
	CSCF3036N6B*	G*VC80905CXA*	23,600	17,200	15.0	12.5	4392948
	CSCF3036N6B*	G*VC80704BXA*	23,600	17,200	14.5	12.2	4392947
	CSCF3036N6B*	G*VC950714CXA*	23,600	17,200	14.5	12.2	4201796
	CSCF3036N6B*	A*VC950714CXA*	23,600	17,200	14.5	12.2	4201795
	CSCF3036N6B*	G*E80703B**	23,600	17,200	14.5	12.2	3603198
	CSCF3036N6B*	G*E80704B**	23,600	17,200	14.5	12.2	3456878
	CSCF3036N6B*	A*VC950704CXA*	23,600	17,200	14.5	12.2	3607302
	CSCF3036N6B*	A*VC90704CXA*	23,600	17,200	14.5	12.2	3607284
	CSCF3036N6B*	A*VC950453BXA*	23,600	17,200	14.5	12.2	3607283
	CSCF3036N6B*	G*VC950704CXA*	23,600	17,200	14.5	12.2	3598249
	CSCF3036N6B*	G*VC950453BXA*	23,600	17,200	14.5	12.2	3598042
	CSCF3036N6B*	G*V950704C**	23,600	17,200	14.5	12.2	3456880
	CSCF3036N6B*	G*V950453B**	23,600	17,200	14.5	12.2	3456879

See Notes on Page 57.

AHRI RATINGS (CONT.)

OUTDOOR UNIT	INDOOR UNITS		COOLING CAPACITY (BTU/H)				AHRI #
	COILS & AIR HANDLERS	FURNACES/BLOWERS	TOTAL	SENSIBLE	SEER[1]	EER[2]	
SSX14 0241B* (cont.)	CSCF3036N6B*+EEP		23,600	17,200	14.0	12.0	3456881
	CSCF3642N6C*+EEP+TXV		24,000	17,500	14.5	12.2	3456882
	CT*F3636*6A*	A*VC950704CXA*	23,600	17,200	15.0	12.5	4588881
	CT*F3636*6A*	A*VC950453BXA*	23,600	17,200	15.0	12.5	4588880
	CT*F3636*6A*	A*VC90704CXA*	23,800	17,400	14.5	12.2	4588879
	CT*F3636*6A*	G*V950704CXA*	23,600	17,200	15.0	12.5	4588758
	CT*F3636*6A*	G*V950453BX**	23,600	17,200	15.0	12.5	4588757
	CT*F3636*6A*	G*V90704CX**	23,800	17,400	14.5	12.2	4588756
	CT*F3636*6A*	G*VC90704CXA*	23,800	17,400	14.5	12.2	3597652
	CT*F3636*6A*	A*VC950714CXA*	23,600	17,200	15.0	12.5	4586424
	CT*F3636*6A*	G*VC950714CXA*	23,600	17,200	15.0	12.5	4201797
	CT*F3636*6A*	G*E80703B**	23,600	17,200	15.0	12.5	3603207
	CT*F3636*6A*	G*E80704B**	23,600	17,200	15.0	12.5	3456883
	CT*F3636*6A*	G*VC950704CXA*	23,600	17,200	15.0	12.5	3598250
	CT*F3636*6A*	G*VC950453BXA*	23,600	17,200	15.0	12.5	3598043
	CT*F3636*6A*	G*V950704C**	23,600	17,200	15.0	12.5	3456886
	CT*F3636*6A*	G*V950453B**	23,600	17,200	15.0	12.5	3456885
	CT*F3636*6A*	G*V90704C**	23,800	17,400	14.5	12.2	3456884
	CT*F3636*6A*+EEP		24,000	17,500	14.0	12.0	3456887
	CT*F3636*6A*	MBE1200**-1B*	24,000	17,500	15.0	12.5	3456888
	CT*F3636*6A*	MBVC1200**-1A*	24,000	17,500	15.0	12.5	3609469
	CT*F3642*6A*	A*VC950714CXA*	23,600	17,200	15.0	12.5	4586425
	CT*F3642*6A*	G*VC950714CXA*	23,600	17,200	15.0	12.5	4201798
SSX14 0301A*	CA*F3642*6B*	A*VC950915DXA*	29,000	21,200	15.0	12.5	4594546
	CA*F3642*6B*	A*VC950714CXA*	28,800	21,000	15.0	12.5	4586426
	CA*F3642*6B*	G*VC950915DXA*	29,000	21,200	15.0	12.5	4201809
	CA*F3642*6B*	G*VC950714CXA*	28,800	21,000	15.0	12.5	4201800
	CA*F3642*6C*	A*VC950915DXA*	29,000	21,200	15.0	12.5	4594547
	CA*F3642*6C*	A*VC950714CXA*	28,800	21,000	15.0	12.5	4586427
	CA*F3642*6C*	G*VC950915DXA*	29,000	21,200	15.0	12.5	4201810
	CA*F3642*6C*	G*VC950714CXA*	28,800	21,000	15.0	12.5	4201801
	CA*F3642*6D*	A*VC950915DXA*	29,000	21,200	15.0	12.5	4594548
	CA*F3642*6D*	A*VC950714CXA*	28,800	21,000	15.0	12.5	4586428
	CA*F3642*6D*	G*VC950915DXA*	29,000	21,200	15.0	12.5	4201811
	CA*F3642*6D*	G*VC950714CXA*	28,800	21,000	15.0	12.5	4201802
	CA*F3743*6A*	A*VC950915DXA*	29,000	21,200	15.0	12.5	4594549
	CA*F3743*6A*	A*VC950714CXA*	28,800	21,000	15.0	12.5	4586429
	CA*F3743*6A*	G*VC950915DXA*	29,000	21,200	15.0	12.5	4201812
	CA*F3743*6A*	G*VC950714CXA*	28,800	21,000	15.0	12.5	4201803
	CHPF3642C6C*	A*VC950714CXA*	28,800	21,000	15.0	12.5	4586430
	CHPF3642C6C*	G*VC950714CXA*	28,800	21,000	15.0	12.5	4201804
	CHPF3642D6B*	A*VC950714CXA*	28,800	21,000	15.0	12.5	4586431
	CHPF3642D6B*	G*VC950714CXA*	28,800	21,000	15.0	12.5	4201805
	CHPF3642D6C*	A*VC950714CXA*	28,800	21,000	15.0	12.5	4586432
	CHPF3642D6C*	G*VC950714CXA*	28,800	21,000	15.0	12.5	4201806
	CSCF3642N6C*	A*VC950714CXA*	28,800	21,000	15.0	12.5	4586433
	CSCF3642N6C*	G*VC950714CXA*	28,800	21,000	15.0	12.5	4201807
	CT*F3642*6A*	A*VC950915DXA*	29,000	21,200	15.0	12.5	4594612
	CT*F3642*6A*	A*VC950714CXA*	28,800	21,000	15.0	12.5	4586434
	CT*F3642*6A*	G*VC950915DXA*	29,000	21,200	15.0	12.5	4201813
	CT*F3642*6A*	G*VC950714CXA*	28,800	21,000	15.0	12.5	4201808

See Notes on Page 57.

AHRI RATINGS (CONT.)

OUTDOOR UNIT	INDOOR UNITS		COOLING CAPACITY (BTU/H)				AHRI #
	COILS & AIR HANDLERS	FURNACES/BLOWERS	TOTAL	SENSIBLE	SEER[1]	EER[2]	
SSX14 0301B*	AEPF313716A*		28,800	21,000	15.0	12.5	3456892
	AR*F193116B*		28,800	21,000	14.0	12.0	3456893
	AR*F193116C*		28,800	21,000	14.0	12.0	4260516
	AR*F363616B*		28,000	20,400	13.5	11.8	3456894
	AR*F363616C*		28,000	20,400	13.5	11.8	4260510
	ASPF313716C*		29,000	21,200	15.0	12.5	4355449
	ASPF313716D*		29,000	21,200	15.0	12.5	4149268
	ASPF313716E*		29,000	21,200	15.0	12.5	4355456
	AT*F193116A*		28,800	21,000	14.0	12.0	3456897
	AT*F363616A*		28,000	20,400	13.5	11.8	3456898
	AVPTC313714A*		28,800	21,000	15.0	12.5	4431253
	AWUF31XX16A*		28,000	20,400	14.0	12.0	3634601
	AWUF31XX16A*+TXV		28,400	20,700	14.5	12.3	4055885
	AWUF32XX16A*		28,000	20,400	14.0	12.0	3629346
	AWUF32XX16A*+TXV		28,400	20,700	14.5	12.3	4055886
	CA*F3636*6C*	A*VC80704BXA*	28,000	20,400	14.5	12.3	4588882
	CA*F3636*6C*	G*VC950714CXA*	28,800	21,000	14.5	12.3	4588762
	CA*F3636*6C*	G*VC950704CXA*	28,800	21,000	14.5	12.3	4588761
	CA*F3636*6C*	G*VC950453BXA*	28,800	21,000	15.0	13.0	4588760
	CA*F3636*6C*	G*VC80704BXA*	28,000	20,400	14.5	12.3	4392950
	CA*F3636*6C*	A*VC950714CXA*	28,800	21,000	14.5	12.3	4201814
	CA*F3636*6C*	G*VC90704CXA*	28,800	21,000	14.5	12.3	4588759
	CA*F3636*6C*	A*VC950704CXA*	28,800	21,000	14.5	12.3	3635264
	CA*F3636*6C*	A*VC950453BXA*	28,800	21,000	15.0	13.0	3635263
	CA*F3636*6C*	A*VC90704CXA*	28,800	21,000	14.5	12.3	3635260
	CA*F3636*6C*+EEP+TXV		28,800	21,000	14.0	12.0	4214002
	CA*F3636*6C*	MBVC1200**-1A*	28,800	21,000	15.0	12.5	4559582
	CA*F3636*6C*+TXV	A*VC80704BXA*	28,000	20,400	15.0	12.5	4588883
	CA*F3636*6C*+TXV	G*VC80704BXA*	28,000	20,400	15.0	12.5	4392951
	CA*F3636*6D*	G*VC950714CXA*	28,800	21,000	14.5	12.3	4588766
	CA*F3636*6D*	G*VC950704CXA*	28,800	21,000	14.5	12.3	4588765
	CA*F3636*6D*	G*VC950453BXA*	28,800	21,000	15.0	12.8	4588764
	CA*F3636*6D*	A*VC950714CXA*	28,800	21,000	14.5	12.3	4392794
	CA*F3636*6D*	A*VC950704CXA*	28,800	21,000	14.5	12.3	4392793
	CA*F3636*6D*	A*VC950453BXA*	28,800	21,000	15.0	12.8	4392792
	CA*F3636*6D*	A*VC90704CXA*	28,800	21,000	14.5	12.3	4392791
	CA*F3636*6D*	G*VC90704CXA*	28,800	21,000	14.5	12.3	4588763
	CA*F3636*6D*+EEP+TXV		28,800	21,000	14.0	12.0	4392795
	CA*F3636*6D*	MBVC1200**-1A*	28,800	21,000	15.0	12.5	4559583
	CA*F3636*6D*+TXV	A*VC80704BXA*	28,000	20,400	15.0	12.5	4588884
	CA*F3636*6D*+TXV	G*VC80704BXA*	28,000	20,400	15.0	12.5	4559584
	CA*F3642*6B*	A*VC950915DXA*	29,000	21,200	15.0	12.5	4588885
	CA*F3642*6B*	A*VC950714CXA*	28,800	21,000	15.0	12.5	4586435
	CA*F3642*6B*	G*VC950915DXA*	29,000	21,200	15.0	12.5	4201831
	CA*F3642*6B*	G*VC950714CXA*	28,800	21,000	15.0	12.5	4201815
	CA*F3642*6C*	A*VC81155CXA*	28,800	21,000	15.0	12.5	4588887
	CA*F3642*6C*	A*VC80905CXA*	28,800	21,000	15.0	12.5	4588886
	CA*F3642*6C*	G*V951155DXA*	28,600	20,900	14.7	12.3	4588771
	CA*F3642*6C*	G*V950905DXA*	29,000	21,200	15.0	12.5	4588770
	CA*F3642*6C*	G*V950704CXA*	28,800	21,000	15.0	12.5	4588769
	CA*F3642*6C*	G*V90704CX**	28,800	21,000	14.2	11.8	4588768
	CA*F3642*6C*	G*VC81155CXA*	28,800	21,000	15.0	12.5	4392953

See Notes on Page 57.

AHRI RATINGS (CONT.)

OUTDOOR UNIT	INDOOR UNITS		COOLING CAPACITY (BTU/H)				AHRI #
	COILS & AIR HANDLERS	FURNACES/BLOWERS	TOTAL	SENSIBLE	SEER[1]	EER[2]	
SSX14 0301B* (cont.)	CA*F3642*6C*	G*VC80905CXA*	28,800	21,000	15.0	12.5	4392952
	CA*F3642*6C*	A*VC90905DXA*	28,800	21,000	15.0	13.0	4216683
	CA*F3642*6C*	G*VC950915DXA*	29,000	21,200	15.0	12.5	4201833
	CA*F3642*6C*	A*VC950915DXA*	29,000	21,200	15.0	12.5	4201832
	CA*F3642*6C*	G*VC950714CXA*	28,800	21,000	15.0	12.5	4201817
	CA*F3642*6C*	A*VC950714CXA*	28,800	21,000	15.0	12.5	4201816
	CA*F3642*6C*	A*VC950905CXA*	29,000	21,200	15.0	12.5	4201292
	CA*F3642*6C*	G*VC950905CXA*	29,000	21,200	15.0	12.5	4201291
	CA*F3642*6C*	G*VC90905DXA*	28,800	21,000	15.0	13.0	4588767
	CA*F3642*6C*	A*VC951155DXA*	28,600	20,900	14.7	12.3	3858180
	CA*F3642*6C*	A*VC950905DXA*	29,000	21,200	15.0	12.5	3858178
	CA*F3642*6C*	G*VC90704CXA*	28,800	21,000	14.2	11.8	3597704
	CA*F3642*6C*	A*VC90704CXA*	28,800	21,000	15.0	12.5	3607303
	CA*F3642*6C*	A*VC950704CXA*	28,800	21,000	15.0	12.5	3607285
	CA*F3642*6C*	G*VC951155DXA*	28,600	20,900	14.7	12.3	3598748
	CA*F3642*6C*	G*VC950905DXA*	29,000	21,200	15.0	12.5	3598521
	CA*F3642*6C*	G*VC950704CXA*	28,800	21,000	15.0	12.5	3598346
	CA*F3642*6C*	G*V951155D**	28,600	20,900	14.7	12.3	3456911
	CA*F3642*6C*	G*V950905D**	29,000	21,200	15.0	12.5	3456910
	CA*F3642*6C*	G*V950704C**	28,800	21,000	15.0	12.5	3456909
	CA*F3642*6C*	G*V90704C**	28,800	21,000	14.2	11.8	3456908
	CA*F3642*6C*+EEP		28,800	21,000	14.0	12.0	3456912
	CA*F3642*6C*+TXV	G*E80703B**	28,800	21,000	15.0	12.5	4559585
	CA*F3642*6C*+TXV	G*E80704B**	28,800	21,000	15.0	12.5	3606035
	CA*F3642*6C*+TXV	G*E81155C**	28,800	21,000	15.0	12.5	3456914
	CA*F3642*6C*+TXV	G*E80905C**	28,800	21,000	15.0	12.5	3456913
	CA*F3642*6D*	A*VC81155CXA*	28,800	21,000	15.0	12.5	4588889
	CA*F3642*6D*	A*VC80905CXA*	28,800	21,000	15.0	12.5	4588888
	CA*F3642*6D*	G*V90704CX**	28,800	21,000	14.2	11.8	4588772
	CA*F3642*6D*	G*VC81155CXA*	28,800	21,000	15.0	12.5	4392955
	CA*F3642*6D*	G*VC80905CXA*	28,800	21,000	15.0	12.5	4392954
	CA*F3642*6D*	G*VC950915DXA*	29,000	21,200	15.0	12.5	4201835
	CA*F3642*6D*	A*VC950915DXA*	29,000	21,200	15.0	12.5	4201834
	CA*F3642*6D*	G*VC950714CXA*	28,800	21,000	15.0	12.5	4201819
	CA*F3642*6D*	A*VC950714CXA*	28,800	21,000	15.0	12.5	4201818
	CA*F3642*6D*	G*VC950905CXA*	29,000	21,200	15.0	12.5	4201294
	CA*F3642*6D*	A*VC950905CXA*	29,000	21,200	15.0	12.5	4201293
	CA*F3642*6D*	G*VC951155DXA*	28,600	20,900	14.7	12.3	3880034
	CA*F3642*6D*	G*VC950905DXA*	29,000	21,200	15.0	12.5	3880033
	CA*F3642*6D*	G*VC950704CXA*	28,800	21,000	15.0	12.5	3880032
	CA*F3642*6D*	G*V951155DXA*	28,600	20,900	14.7	12.3	3880030
	CA*F3642*6D*	G*V950905DXA*	29,000	21,200	15.0	12.5	3880029
	CA*F3642*6D*	G*V950704CXA*	28,800	21,000	15.0	12.5	3880028
	CA*F3642*6D*	G*V90704C**	28,800	21,000	14.2	11.8	3880027
	CA*F3642*6D*	A*VC951155DXA*	28,600	20,900	14.7	12.3	3880026
	CA*F3642*6D*	A*VC950905DXA*	29,000	21,200	15.0	12.5	3880025
	CA*F3642*6D*	A*VC950704CXA*	28,800	21,000	15.0	12.5	3880024
	CA*F3642*6D*	A*VC90704CXA*	28,800	21,000	15.0	12.5	3880023
	CA*F3642*6D*	G*VC90704CXA*	28,800	21,000	14.2	11.8	3880031
	CA*F3642*6D*+EEP		28,800	21,000	14.0	12.0	4559586
	CA*F3642*6D*+TXV	G*E80703B**	28,800	21,000	15.0	12.5	4559587
	CA*F3642*6D*+TXV	G*E81155C**	28,800	21,000	15.0	12.5	3880140

See Notes on Page 57.

AHRI RATINGS (CONT.)

OUTDOOR UNIT	INDOOR UNITS		COOLING CAPACITY (BTU/H)				AHRI #
	COILS & AIR HANDLERS	FURNACES/BLOWERS	TOTAL	SENSIBLE	SEER[1]	EER[2]	
SSX14 0301B* (cont.)	CA*F3642*6D*+TXV	G*E80905C**	28,800	21,000	15.0	12.5	3880139
	CA*F3642*6D*+TXV	G*E80704B**	28,800	21,000	15.0	12.5	3880138
	CA*F3743*6A*	A*VC90704CXA*	28,800	21,000	14.2	11.8	4588890
	CA*F3743*6A*	G*V951155DXA*	28,600	20,900	14.7	12.3	4588777
	CA*F3743*6A*	G*V950905DXA*	29,000	21,200	15.0	12.5	4588776
	CA*F3743*6A*	G*V950704CXA*	28,800	21,000	15.0	12.5	4588775
	CA*F3743*6A*	G*V950453BX**	28,800	21,000	14.5	12.2	4588774
	CA*F3743*6A*	G*V90704CX**	28,800	21,000	14.2	11.8	4588773
	CA*F3743*6A*	G*VC950915DXA*	29,000	21,200	15.0	12.5	4201837
	CA*F3743*6A*	A*VC950915DXA*	29,000	21,200	15.0	12.5	4201836
	CA*F3743*6A*	G*VC950714CXA*	28,800	21,000	15.0	12.5	4201821
	CA*F3743*6A*	A*VC950714CXA*	28,800	21,000	15.0	12.5	4201820
	CA*F3743*6A*	A*VC950905CXA*	29,000	21,200	15.0	12.5	4201296
	CA*F3743*6A*	G*VC950905CXA*	29,000	21,200	15.0	12.5	4201295
	CA*F3743*6A*	A*VC951155DXA*	28,600	20,900	14.7	12.3	3858181
	CA*F3743*6A*	A*VC950905DXA*	29,000	21,200	15.0	12.5	3858179
	CA*F3743*6A*	A*VC950704CXA*	28,800	21,000	15.0	12.5	3858176
	CA*F3743*6A*	A*VC950453BXA*	28,800	21,000	14.5	12.2	3858174
	CA*F3743*6A*	G*VC90704CXA*	28,800	21,000	14.2	11.8	3597705
	CA*F3743*6A*	G*VC951155DXA*	28,600	20,900	14.7	12.3	3598749
	CA*F3743*6A*	G*VC950905DXA*	29,000	21,200	15.0	12.5	3598522
	CA*F3743*6A*	G*VC950704CXA*	28,800	21,000	15.0	12.5	3598347
	CA*F3743*6A*	G*VC950453BXA*	28,800	21,000	14.5	12.2	3598110
	CA*F3743*6A*	G*V951155D**	28,600	20,900	14.7	12.3	3456919
	CA*F3743*6A*	G*V950905D**	29,000	21,200	15.0	12.5	3456918
	CA*F3743*6A*	G*V950704C**	28,800	21,000	15.0	12.5	3456917
	CA*F3743*6A*	G*V950453B**	28,800	21,000	14.5	12.2	3456916
	CA*F3743*6A*	G*V90704C**	28,800	21,000	14.2	11.8	3456915
	CA*F3743*6A*+EEP+TXV		28,800	21,000	14.5	12.2	3456920
	CA*F3743*6A*+TXV	G*V950453BX**	28,800	21,000	15.0	12.5	4588783
	CA*F3743*6A*+TXV	G*VC950905DXA*	28,800	21,000	15.0	13.0	4588782
	CA*F3743*6A*+TXV	G*VC950714CXA*	28,800	21,000	15.0	12.5	4588781
	CA*F3743*6A*+TXV	G*VC950704CXA*	28,800	21,000	15.0	12.5	4588780
	CA*F3743*6A*+TXV	A*VC950905DXA*	28,800	21,000	15.0	13.0	4216680
	CA*F3743*6A*+TXV	A*VC90905DXA*	28,800	21,000	15.0	13.0	4216679
	CA*F3743*6A*+TXV	A*VC950714CXA*	28,800	21,000	15.0	12.5	4201822
	CA*F3743*6A*+TXV	G*VC90905DXA*	28,800	21,000	15.0	13.0	4588779
	CA*F3743*6A*+TXV	G*VC90704CXA*	28,800	21,000	15.0	12.5	4588778
	CA*F3743*6A*+TXV	A*VC950453BXA*	28,800	21,000	15.0	12.5	3858175
	CA*F3743*6A*+TXV	A*VC950704CXA*	28,800	21,000	15.0	12.5	3635265
	CA*F3743*6A*+TXV	A*VC90704CXA*	28,800	21,000	15.0	12.5	3635261
	CA*F3743*6A*+TXV	G*E81155C**	28,800	21,000	15.0	12.5	3456922
	CA*F3743*6A*+TXV	G*VC950453BXA*	28,800	21,000	15.0	12.5	3598111
	CA*F3743*6A*+TXV	G*E80905C**	28,800	21,000	15.0	12.5	3456921
	CA*F3743*6A*+TXV	G*V950453B**	28,800	21,000	15.0	12.5	3456923
	CA*F3743*6D*	A*VC90704CXA*	28,800	21,000	14.2	11.8	4588891
	CA*F3743*6D*	G*VC950915DXA*	29,000	21,200	15.0	12.5	4415160
	CA*F3743*6D*	A*VC950915DXA*	29,000	21,200	15.0	12.5	4415159
	CA*F3743*6D*	G*VC950714CXA*	28,800	21,000	15.0	12.5	4415157
	CA*F3743*6D*	A*VC950714CXA*	28,800	21,000	15.0	12.5	4415156
	CA*F3743*6D*	A*VC950905CXA*	29,000	21,200	15.0	12.5	4415143
	CA*F3743*6D*	G*VC950905CXA*	29,000	21,200	15.0	12.5	4415142

See Notes on Page 57.

AHRI RATINGS (CONT.)

OUTDOOR UNIT	INDOOR UNITS		COOLING CAPACITY (BTU/H)				AHRI #
	COILS & AIR HANDLERS	FURNACES/BLOWERS	TOTAL	SENSIBLE	SEER[1]	EER[2]	
SSX14 0301B* (cont.)	CA*F3743*6D*	A*VC951155DXA*	28,600	20,900	14.7	12.3	4415136
	CA*F3743*6D*	A*VC950905DXA*	29,000	21,200	15.0	12.5	4415135
	CA*F3743*6D*	A*VC950704CXA*	28,800	21,000	15.0	12.5	4415134
	CA*F3743*6D*	A*VC950453BXA*	28,800	21,000	14.5	12.2	4415132
	CA*F3743*6D*	G*VC951155DXA*	28,600	20,900	14.7	12.3	4415090
	CA*F3743*6D*	G*VC950905DXA*	29,000	21,200	15.0	12.5	4415089
	CA*F3743*6D*	G*VC950704CXA*	28,800	21,000	15.0	12.5	4415087
	CA*F3743*6D*	G*VC950453BXA*	28,800	21,000	14.5	12.2	4415084
	CA*F3743*6D*	G*VC90704CXA*	28,800	21,000	14.2	11.8	4415082
	CA*F3743*6D*+EEP+TXV		28,800	21,000	14.5	12.2	4415079
	CA*F3743*6D*+TXV	G*VC950905DXA*	28,800	21,000	15.0	13.0	4589806
	CA*F3743*6D*+TXV	G*VC950714CXA*	28,800	21,000	15.0	12.5	4589805
	CA*F3743*6D*+TXV	G*VC950704CXA*	28,800	21,000	15.0	12.5	4589804
	CA*F3743*6D*+TXV	G*VC90905DXA*	28,800	21,000	15.0	13.0	4589803
	CA*F3743*6D*+TXV	A*VC950905DXA*	28,800	21,000	15.0	13.0	4415178
	CA*F3743*6D*+TXV	A*VC90905DXA*	28,800	21,000	15.0	13.0	4415177
	CA*F3743*6D*+TXV	A*VC950714CXA*	28,800	21,000	15.0	12.5	4415158
	CA*F3743*6D*+TXV	A*VC950453BXA*	28,800	21,000	15.0	12.5	4415133
	CA*F3743*6D*+TXV	A*VC950704CXA*	28,800	21,000	15.0	12.5	4415102
	CA*F3743*6D*+TXV	A*VC90704CXA*	28,800	21,000	15.0	12.5	4415101
	CA*F3743*6D*+TXV	G*VC90704CXA*	28,800	21,000	15.0	12.5	4589802
	CA*F3743*6D*+TXV	G*VC950453BXA*	28,800	21,000	15.0	12.5	4415085
	CA*F3743*6D*+TXV	G*E81155C**	28,800	21,000	15.0	12.5	4415081
	CA*F3743*6D*+TXV	G*E80905C**	28,800	21,000	15.0	12.5	4415080
	CA*F4860*6B*	G*VC950915DXA*	28,800	21,000	15.0	13.0	4588787
	CA*F4860*6B*	G*VC950905DXA*	28,800	21,000	15.0	13.0	4588786
	CA*F4860*6B*	G*VC950905CXA*	28,800	21,000	15.0	13.0	4588785
	CA*F4860*6B*	A*VC950915DXA*	28,800	21,000	15.0	13.0	4201838
	CA*F4860*6B*	A*VC950905CXA*	28,800	21,000	15.0	13.0	4201297
	CA*F4860*6B*	G*VC90905DXA*	28,800	21,000	15.0	13.0	4588784
	CA*F4860*6B*	A*VC950905DXA*	28,800	21,000	15.0	13.0	3635266
	CA*F4860*6B*	A*VC90905DXA*	28,800	21,000	15.0	13.0	3635262
	CA*F4860*6D*	G*VC950915DXA*	28,800	21,000	15.0	13.0	4588791
	CA*F4860*6D*	G*VC950905DXA*	28,800	21,000	15.0	13.0	4588790
	CA*F4860*6D*	G*VC950905CXA*	28,800	21,000	15.0	13.0	4588789
	CA*F4860*6D*	G*VC90905DXA*	28,800	21,000	15.0	13.0	4588788
	CA*F4860*6D*	A*VC950915DXA*	28,800	21,000	15.0	13.0	4201839
	CA*F4860*6D*	A*VC950905CXA*	28,800	21,000	15.0	13.0	4201298
	CA*F4860*6D*	A*VC950905DXA*	28,800	21,000	15.0	13.0	3880201
	CA*F4860*6D*	A*VC90905DXA*	28,800	21,000	15.0	13.0	3880200
	CHPF3636B6C*	G*V950453BX**	28,800	21,000	15.0	12.5	4588792
	CHPF3636B6C*	A*VC950453BXA*	28,800	21,000	15.0	12.5	3607293
	CHPF3636B6C*	G*VC950453BXA*	28,800	21,000	15.0	12.5	3598113
	CHPF3636B6C*	G*V950453B**	28,800	21,000	15.0	12.5	3456927
	CHPF3636B6C*+EEP		28,800	21,000	14.0	12.0	3456928
	CHPF3636B6C*	MBE1200**-1B*	28,800	21,000	15.0	12.5	3456929
	CHPF3636B6C*	MBVC1200**-1A*	28,800	21,000	15.0	12.5	3609470
	CHPF3642C6C*	A*VC950905DXA*	29,000	21,200	15.0	12.5	4588895
	CHPF3642C6C*	A*VC81155CXA*	28,800	21,000	15.0	12.5	4588894
	CHPF3642C6C*	A*VC80905CXA*	28,800	21,000	15.0	12.5	4588893
	CHPF3642C6C*	A*VC80704BX*	28,800	21,000	15.0	13.0	4588892
	CHPF3642C6C*	G*V950704CXA*	28,800	21,000	15.0	12.5	4588794

See Notes on Page 57.

AHRI RATINGS (CONT.)

OUTDOOR UNIT	INDOOR UNITS		COOLING CAPACITY (BTU/H)				AHRI #
	COILS & AIR HANDLERS	FURNACES/BLOWERS	TOTAL	SENSIBLE	SEER[1]	EER[2]	
SSX14 0301B* (cont.)	CHPF3642C6C*	G*VC90704CXA*	28,800	21,000	15.0	12.5	4588793
	CHPF3642C6C*	G*VC81155CXA*	28,800	21,000	15.0	12.5	4392958
	CHPF3642C6C*	G*VC80905CXA*	28,800	21,000	15.0	12.5	4392957
	CHPF3642C6C*	G*VC80704BX*	28,800	21,000	15.0	13.0	4392956
	CHPF3642C6C*	G*VC950905DXA*	29,000	21,200	15.0	12.5	4216684
	CHPF3642C6C*	G*VC80704BXA*	28,800	21,000	15.0	13.0	4216682
	CHPF3642C6C*	A*VC80704BXA*	28,800	21,000	15.0	13.0	4216681
	CHPF3642C6C*	G*VC950714CXA*	28,800	21,000	15.0	12.5	4201824
	CHPF3642C6C*	A*VC950714CXA*	28,800	21,000	15.0	12.5	4201823
	CHPF3642C6C*	A*VC950704CXA*	28,800	21,000	15.0	12.5	3607304
	CHPF3642C6C*	A*VC90704CXA*	28,800	21,000	15.0	12.5	3607286
	CHPF3642C6C*	G*VC950704CXA*	28,800	21,000	15.0	12.5	3598348
	CHPF3642C6C*	G*V950704C**	28,800	21,000	15.0	12.5	3456930
	CHPF3642C6C*+EEP+TXV		28,800	21,000	14.5	12.2	4588795
	CHPF3642C6C+EEP+TXV		28,800	21,000	14.5	12.2	3483078
	CHPF3642D6B*	A*VC950714CXA*	28,800	21,000	15.0	12.5	4586436
	CHPF3642D6B*	G*VC950714CXA*	28,800	21,000	15.0	12.5	4201825
	CHPF3642D6C*	G*V950704CXA*	28,800	21,000	15.0	12.5	4588796
	CHPF3642D6C*	G*VC950714CXA*	28,800	21,000	15.0	12.5	4201827
	CHPF3642D6C*	A*VC950714CXA*	28,800	21,000	15.0	12.5	4201826
	CHPF3642D6C*	A*VC950704CXA*	28,800	21,000	15.0	12.5	3858177
	CHPF3642D6C*	G*VC950704CXA*	28,800	21,000	15.0	12.5	3598350
	CHPF3642D6C*	G*V950704C**	28,800	21,000	15.0	12.5	3456935
	CHPF3642D6C*+EEP		28,800	21,000	14.0	12.0	3456936
	CHPF3642D6C*+TXV	G*E81155C**	28,800	21,000	15.0	12.5	3456938
	CHPF3642D6C*+TXV	G*E80905C**	28,800	21,000	15.0	12.5	3456937
	CSCF3642N6C*	A*VC81155CXA*	28,800	21,000	15.0	12.5	4588898
	CSCF3642N6C*	A*VC80905CXA*	28,800	21,000	15.0	12.5	4588897
	CSCF3642N6C*	A*VC80704BXA*	28,800	21,000	15.0	13.0	4588896
	CSCF3642N6C*	G*V950704CXA*	28,800	21,000	15.0	12.5	4588798
	CSCF3642N6C*	G*VC90704CXA*	28,800	21,000	15.0	12.5	4588797
	CSCF3642N6C*	G*VC81155CXA*	28,800	21,000	15.0	12.5	4392961
	CSCF3642N6C*	G*VC80905CXA*	28,800	21,000	15.0	12.5	4392960
	CSCF3642N6C*	G*VC80704BXA*	28,800	21,000	15.0	13.0	4392959
	CSCF3642N6C*	G*VC950714CXA*	28,800	21,000	15.0	12.5	4201829
	CSCF3642N6C*	A*VC950714CXA*	28,800	21,000	15.0	12.5	4201828
	CSCF3642N6C*	A*VC950704CXA*	28,800	21,000	15.0	12.5	3607305
	CSCF3642N6C*	A*VC90704CXA*	28,800	21,000	15.0	12.5	3607287
	CSCF3642N6C*	G*E80703B**	28,000	20,400	14.5	12.5	3603208
	CSCF3642N6C*	G*E80704B**	28,000	20,400	14.5	12.5	3456939
	CSCF3642N6C*	G*VC950704CXA*	28,800	21,000	15.0	12.5	3598351
	CSCF3642N6C*	G*V950704C**	28,800	21,000	15.0	12.5	3456940
	CSCF3642N6C*+EEP		28,800	21,000	14.0	12.0	3456941
	CSCF3642N6C*+EEP+TXV		28,800	21,000	14.5	12.2	3456942
	CSCF3642N6C*+TXV	G*E81155C**	28,800	21,000	15.0	12.5	3456944
	CSCF3642N6C*+TXV	G*E80905C**	28,800	21,000	15.0	12.5	3456943
	CT*F3636*6A*+EEP		27,000	19,700	13.5	11.8	3456945
	CT*F3636*6A*	MBE1200**-1B*	28,800	21,000	15.0	12.5	3456946
	CT*F3636*6A*	MBVC1200**-1A*	28,800	21,000	15.0	12.5	3609471
	CT*F3642*6A*	A*VC950915DXA*	29,000	21,200	15.0	12.5	4588899
	CT*F3642*6A*	A*VC950714CXA*	28,800	21,000	15.0	12.5	4586437
	CT*F3642*6A*	G*VC950915DXA*	29,000	21,200	15.0	12.5	4201840
	CT*F3642*6A*	G*VC950714CXA*	28,800	21,000	15.0	12.5	4201830

See Notes on Page 57.

AHRI RATINGS (CONT.)

OUTDOOR UNIT	INDOOR UNITS		COOLING CAPACITY (BTU/H)				AHRI #
	COILS & AIR HANDLERS	FURNACES/BLOWERS	TOTAL	SENSIBLE	SEER[1]	EER[2]	
SSX14 0361A*	AEPF426016C*		34,600	24,600	15.0	13.0	1492512
	AR*F363616B*		35,000	24,900	13.5	11.8	1492513
	AR*F374316B*		35,000	24,900	14.0	12.0	1492514
	ASPF426016B*		34,600	24,600	15.0	12.5	1492515
	AT*F363616A*		35,000	24,900	13.5	11.8	1483516
	AT*F374316A*		35,000	24,900	14.0	12.0	1483483
	CA*F3636*6B*	A*V80704B**	34,000	24,100	14.5	12.0	3185939
	CA*F3636*6B*	G*E80704B**	34,000	24,100	14.5	12.2	1412450
	CA*F3636*6B*+EEP		33,000	23,400	13.5	11.5	1412484
	CA*F3642*6B*	G*V90704C**	34,600	24,600	14.5	12.2	1347133
	CA*F3642*6B*	G*V90905D**	34,600	24,600	15.0	12.5	1347134
	CA*F3642*6B*+EEP		34,600	24,600	14.0	12.0	1347135
	CA*F3743*6A*	G*V90704C**	34,600	24,600	14.5	12.2	3000050
	CA*F3743*6A*	G*V90905D**	34,600	24,600	15.0	12.5	3000674
	CA*F3743*6A*+EEP		34,600	24,600	14.0	12.0	3000675
	CA*F3743*6A*+EEP+TXV		34,600	24,600	14.5	12.2	3262587
	CA*F4860*6B*	G*E80905C**	34,600	24,600	15.0	12.5	3185940
	CA*F4860*6B*	G*E81155C**	34,600	24,600	15.0	12.5	1346628
	CA*F4860*6B*	G*V950704C**	34,600	24,600	14.5	12.2	1346631
	CA*F4860*6B*	G*V950905D**	34,600	24,600	15.0	12.5	1346632
	CA*F4860*6B*	G*V951155D**	34,600	24,600	14.5	12.2	1346633
	CA*F4860*6B*+EEP		35,000	24,900	14.0	12.0	1347136
	CA*F4860*6B*	MBE1600**-1	35,000	24,900	14.5	12.2	1346634
	CA*F4860*6B*+TXV	G*V950704C**	34,600	24,600	15.0	12.5	3298231
	CHPF3636B6B*+EEP		34,000	24,100	14.0	12.0	1412457
	CHPF3636B6C*+EEP		34,000	24,100	14.0	12.0	3300052
	CHPF3642C6B*	G*E80905C**	34,600	24,600	15.0	12.5	3060291
	CHPF3642C6B*	G*E81155C**	34,600	24,600	15.0	12.5	1347549
	CHPF3642C6C*	G*E80905C**	34,600	24,600	15.0	12.5	3300057
	CHPF3642C6C*	G*E81155C**	34,600	24,600	15.0	12.5	3300053
	CHPF3642C6C*	G*V950704C**	34,600	24,600	14.5	12.2	3300056
	CHPF3642D6B*	G*V950704C**	34,600	24,600	14.5	12.2	1330599
	CHPF3642D6B*	G*V951155D**	34,600	24,600	15.0	12.2	1330522
	CHPF3642D6B*+EEP		35,000	24,900	14.0	12.0	1330628
	CHPF3642D6B*	MBE2000**-1A*	35,000	24,900	15.0	12.5	1330600
	CHPF3642D6C*	G*V950704C**	34,600	24,600	14.5	12.2	3300060
	CHPF3642D6C*	G*V951155D**	34,600	24,600	15.0	12.2	3300061
	CHPF3642D6C*+EEP		35,000	24,900	14.0	12.0	3300062
	CHPF3642D6C*	MBE2000**-1B*	35,000	24,900	15.0	12.5	3300159
	CHPF3743D6A*	G*V950905D**	34,600	24,600	15.0	12.2	3388875
	CHPF3743D6A*+EEP+TXV		34,600	24,600	14.5	12.2	3262617
	CHPF3743D6B*+EEP+TXV		34,600	24,600	14.5	12.2	3300063
	CSCF3642N6C*+EEP		35,000	24,900	14.0	12.0	1296695
	CSCF4860N6C*	G*E81155C**	34,600	24,600	15.0	12.5	1296820
	CSCF4860N6C*	G*V950704C**	34,600	24,600	14.5	12.2	1296823
	CSCF4860N6C*	G*V950905D**	34,600	24,600	14.5	12.2	1296824
	CSCF4860N6C*	G*V951155D**	34,600	24,600	14.5	12.2	1296825
	CSCF4860N6C*+EEP+TXV		35,000	24,900	14.5	12.2	3262603
	CT*F3636*6A*	G*E80704B**	34,000	24,100	14.5	12.2	1449880
	CT*F3636*6A*+EEP		33,000	23,400	13.5	11.5	1449881
	CT*F3642*6A*	G*V90704C**	34,600	24,600	14.5	12.2	1449882
	CT*F3642*6A*	G*V90905D**	34,600	24,600	15.0	12.5	1449883

See Notes on Page 57.

AHRI RATINGS (CONT.)

OUTDOOR UNIT	INDOOR UNITS		COOLING CAPACITY (BTU/H)				AHRI #
	COILS & AIR HANDLERS	FURNACES/BLOWERS	TOTAL	SENSIBLE	SEER[1]	EER[2]	
SSX14 0361A* (cont.)	CT*F3642*6A*+EEP		34,600	24,600	14.0	12.0	1487081
	CT*F4860*6A*	G*E81155C**	34,600	24,600	15.0	12.5	1449884
	CT*F4860*6A*	G*V950704C**	34,600	24,600	14.5	12.2	1449887
	CT*F4860*6A*	G*V950905D**	34,600	24,600	15.0	12.5	1449888
	CT*F4860*6A*	G*V951155D**	34,600	24,600	14.5	12.2	1449889
	CT*F4860*6A*+EEP		35,000	24,900	14.0	12.0	1449890
	CT*F4860*6A*	MBE1600**-1	35,000	24,900	14.5	12.2	1449891
SSX14 0361B*	AEPF313716A*		34,000	24,100	14.5	12.0	3629501
	AEPF426016C*		35,000	24,900	15.0	13.0	3629502
	AR*F363616B*		33,000	23,400	13.5	11.5	3629503
	AR*F363616C*		33,000	23,400	13.5	11.5	4260511
	AR*F374316B*		35,000	24,900	14.0	12.0	3629504
	AR*F374316C*		35,000	24,900	14.0	12.0	4358265
	ASPF426016B*		34,600	24,600	15.0	12.5	4204954
	ASPF426016C*		34,600	24,600	15.0	12.5	4358302
	ASPF426016D*		34,600	24,600	15.0	12.5	4204955
	ASPF426016E*		34,600	24,600	15.0	12.5	4358303
	AT*F363616A*		33,000	23,400	13.5	11.5	3629505
	AT*F374316A*		35,000	24,900	14.0	12.0	3629506
	AVPTC313714A*		34,000	24,100	14.5	12.0	4431258
	AVPTC426014A*		35,000	24,900	15.0	13.0	4431261
	AWUF37XX16B*+TXV		33,000	23,400	14.5	12.2	3897191
	CA*F3636*6C*+EEP+TXV		33,000	23,400	14.0	11.8	4214005
	CA*F3636*6D*+EEP+TXV		33,000	23,400	14.0	11.8	4392796
	CA*F3642*6C*	A*VC950704CXA*	34,600	24,600	14.5	12.2	4588902
	CA*F3642*6C*	A*VC90905DXA*	34,600	24,600	15.0	12.5	4588901
	CA*F3642*6C*	A*VC90704CXA*	34,600	24,600	14.5	12.2	4588900
	CA*F3642*6C*	G*V90905DX**	34,600	24,600	15.0	12.5	4588800
	CA*F3642*6C*	G*V90704CX**	34,600	24,600	14.5	12.2	4588799
	CA*F3642*6C*	G*VC950704CXA*	34,600	24,600	14.5	12.2	4216688
	CA*F3642*6C*	A*VC950905CXA*	34,600	24,600	15.0	12.5	4201309
	CA*F3642*6C*	G*VC950905CXA*	34,600	24,600	15.0	12.5	4201308
	CA*F3642*6C*	G*V90905D**	34,600	24,600	15.0	12.5	3629465
	CA*F3642*6C*	G*V90704C**	34,600	24,600	14.5	12.2	3629462
	CA*F3642*6C*	G*VC90905DXA*	34,600	24,600	15.0	12.5	3630184
	CA*F3642*6C*	G*VC90704CXA*	34,600	24,600	14.5	12.2	3630183
	CA*F3642*6C*+EEP		34,600	24,600	14.0	12.0	3629507
	CA*F3642*6C*+TXV	G*V90905DX**	34,600	24,600	15.0	12.5	4588801
	CA*F3642*6C*+TXV	A*VC950905CXA*	34,600	24,600	15.0	12.5	4201311
	CA*F3642*6C*+TXV	G*VC950905CXA*	34,600	24,600	15.0	12.5	4201310
	CA*F3642*6C*+TXV	G*V90905D**	34,600	24,600	15.0	12.5	3629466
	CA*F3642*6D*	A*VC90905DXA*	34,600	24,600	15.0	12.5	4588904
	CA*F3642*6D*	A*VC90704CXA*	34,600	24,600	14.5	12.2	4588903
	CA*F3642*6D*	G*V90905DX**	34,600	24,600	15.0	12.5	4588803
	CA*F3642*6D*	G*V90704CX**	34,600	24,600	14.5	12.2	4588802
	CA*F3642*6D*	G*VC950704CXA*	34,600	24,600	14.5	12.2	4588198
	CA*F3642*6D*	A*VC950905CXA*	34,600	24,600	15.0	12.5	4201313
	CA*F3642*6D*	G*VC950905CXA*	34,600	24,600	15.0	12.5	4201312
	CA*F3642*6D*	G*V90905D**	34,600	24,600	15.0	12.5	3880040
	CA*F3642*6D*	G*V90704C**	34,600	24,600	14.5	12.2	3880039
	CA*F3642*6D*	G*VC90905DXA*	34,600	24,600	15.0	12.5	3880042
	CA*F3642*6D*	G*VC90704CXA*	34,600	24,600	14.5	12.2	3880041

See Notes on Page 57.

AHRI RATINGS (CONT.)

OUTDOOR UNIT	INDOOR UNITS		COOLING CAPACITY (BTU/H)				AHRI #
	COILS & AIR HANDLERS	FURNACES/BLOWERS	TOTAL	SENSIBLE	SEER[1]	EER[2]	
SSX14 0361B* (cont.)	CA*F3642*6D*+EEP		34,600	24,600	14.0	12.0	4588188
	CA*F3642*6D*+TXV	G*V90905DX**	34,600	24,600	15.0	12.5	4588804
	CA*F3642*6D*+TXV	A*VC950905CXA*	34,600	24,600	15.0	12.5	4201315
	CA*F3642*6D*+TXV	G*VC950905CXA*	34,600	24,600	15.0	12.5	4201314
	CA*F3642*6D*+TXV	G*V90905D**	34,600	24,600	15.0	12.5	3880143
	CA*F3743*6A*	A*VC90905DXA*	34,600	24,600	15.0	12.5	4588906
	CA*F3743*6A*	A*VC90704CXA*	34,600	24,600	14.5	12.2	4588905
	CA*F3743*6A*	G*V90905DX**	34,600	24,600	15.0	12.5	4588806
	CA*F3743*6A*	G*V90704CX**	34,600	24,600	14.5	12.2	4588805
	CA*F3743*6A*	A*VC950905CXA*	34,600	24,600	15.0	12.5	4201317
	CA*F3743*6A*	G*VC950905CXA*	34,600	24,600	15.0	12.5	4201316
	CA*F3743*6A*	G*V90905D**	34,600	24,600	15.0	12.5	3629467
	CA*F3743*6A*	G*V90704C**	34,600	24,600	14.5	12.2	3629463
	CA*F3743*6A*	G*VC90905DXA*	34,600	24,600	15.0	12.5	3629486
	CA*F3743*6A*	G*VC90704CXA*	34,600	24,600	14.5	12.2	3629484
	CA*F3743*6A*+EEP		34,600	24,600	14.0	12.0	3629508
	CA*F3743*6A*+EEP+TXV		34,600	24,600	14.5	12.2	3629509
	CA*F3743*6A*+TXV	G*V951155DXA*	34,600	24,600	15.0	12.5	4588808
	CA*F3743*6A*+TXV	G*V950905DXA*	34,600	24,600	15.0	12.5	4588807
	CA*F3743*6A*+TXV	G*VC950915DXA*	34,600	24,600	15.0	12.5	4201871
	CA*F3743*6A*+TXV	A*VC950915DXA*	34,600	24,600	15.0	12.5	4201870
	CA*F3743*6A*+TXV	A*VC950905CXA*	34,600	24,600	15.0	12.5	4201319
	CA*F3743*6A*+TXV	G*VC950905CXA*	34,600	24,600	15.0	12.5	4201318
	CA*F3743*6A*+TXV	A*VC951155DXA*	34,600	24,600	15.0	12.5	3858187
	CA*F3743*6A*+TXV	A*VC950905DXA*	34,600	24,600	15.0	12.5	3858185
	CA*F3743*6A*+TXV	G*VC951155DXA*	34,600	24,600	15.0	12.5	3629496
	CA*F3743*6A*+TXV	G*VC950905DXA*	34,600	24,600	15.0	12.5	3629493
	CA*F3743*6A*+TXV	G*V951155D**	34,600	24,600	15.0	12.5	3629479
	CA*F3743*6A*+TXV	G*V950905D**	34,600	24,600	15.0	12.5	3629475
	CA*F3743*6D*	A*VC90905DXA*	34,600	24,600	15.0	12.5	4588908
	CA*F3743*6D*	A*VC90704CXA*	34,600	24,600	14.5	12.2	4588907
	CA*F3743*6D*	A*VC950905CXA*	34,600	24,600	15.0	12.5	4415145
	CA*F3743*6D*	G*VC950905CXA*	34,600	24,600	15.0	12.5	4415144
	CA*F3743*6D*	G*VC90905DXA*	34,600	24,600	15.0	12.5	4415092
	CA*F3743*6D*	G*VC90704CXA*	34,600	24,600	14.5	12.2	4415091
	CA*F3743*6D*+EEP		34,600	24,600	14.0	12.0	4415095
	CA*F3743*6D*+EEP+TXV		34,600	24,600	14.5	12.2	4415096
	CA*F3743*6D*+TXV	G*VC950915DXA*	34,600	24,600	15.0	12.5	4415162
	CA*F3743*6D*+TXV	A*VC950915DXA*	34,600	24,600	15.0	12.5	4415161
	CA*F3743*6D*+TXV	A*VC950905CXA*	34,600	24,600	15.0	12.5	4415147
	CA*F3743*6D*+TXV	G*VC950905CXA*	34,600	24,600	15.0	12.5	4415146
	CA*F3743*6D*+TXV	A*VC951155DXA*	34,600	24,600	15.0	12.5	4415138
	CA*F3743*6D*+TXV	A*VC950905DXA*	34,600	24,600	15.0	12.5	4415137
	CA*F3743*6D*+TXV	G*VC951155DXA*	34,600	24,600	15.0	12.5	4415094
	CA*F3743*6D*+TXV	G*VC950905DXA*	34,600	24,600	15.0	12.5	4415093
	CA*F4860*6B*	A*VC81155CXA*	34,600	24,600	14.5	12.5	4588910
	CA*F4860*6B*	A*VC80905CXA*	34,600	24,600	14.5	12.5	4588909
	CA*F4860*6B*	G*V951155DXA*	34,600	24,600	14.5	12.2	4588811
	CA*F4860*6B*	G*V950905DXA*	34,600	24,600	15.0	12.5	4588810
	CA*F4860*6B*	G*V950704CXA*	34,600	24,600	14.5	12.2	4588809
	CA*F4860*6B*	G*VC81155CXA*	34,600	24,600	14.5	12.5	4392963
	CA*F4860*6B*	G*VC80905CXA*	34,600	24,600	14.5	12.5	4392962

See Notes on Page 57.

AHRI RATINGS (CONT.)

OUTDOOR UNIT	INDOOR UNITS		COOLING CAPACITY (BTU/H)				AHRI #
	COILS & AIR HANDLERS	FURNACES/BLOWERS	TOTAL	SENSIBLE	SEER[1]	EER[2]	
SSX14 0361B* (cont.)	CA*F4860*6B*	G*VC950915DXA*	34,600	24,600	15.0	12.5	4201873
	CA*F4860*6B*	A*VC950915DXA*	34,600	24,600	15.0	12.5	4201872
	CA*F4860*6B*	G*VC950714CXA*	34,600	24,600	14.5	12.2	4201859
	CA*F4860*6B*	A*VC950714CXA*	34,600	24,600	14.5	12.2	4201858
	CA*F4860*6B*	A*VC950905CXA*	34,600	24,600	15.0	12.5	4201321
	CA*F4860*6B*	G*VC950905CXA*	34,600	24,600	15.0	12.5	4201320
	CA*F4860*6B*	A*VC951155DXA*	34,600	24,600	14.5	12.2	3858188
	CA*F4860*6B*	A*VC950905DXA*	34,600	24,600	15.0	12.5	3858186
	CA*F4860*6B*	A*VC950704CXA*	34,600	24,600	14.5	12.2	3858182
	CA*F4860*6B*	G*VC951155DXA*	34,600	24,600	14.5	12.2	3629497
	CA*F4860*6B*	G*VC950905DXA*	34,600	24,600	15.0	12.5	3629494
	CA*F4860*6B*	G*VC950704CXA*	34,600	24,600	14.5	12.2	3629488
	CA*F4860*6B*	G*V951155D**	34,600	24,600	14.5	12.2	3629480
	CA*F4860*6B*	G*V950905D**	34,600	24,600	15.0	12.5	3629476
	CA*F4860*6B*	G*V950704C**	34,600	24,600	14.5	12.2	3629469
	CA*F4860*6B*	G*E81155C**	34,600	24,600	15.0	12.5	3629458
	CA*F4860*6B*	G*E80905C**	34,600	24,600	15.0	12.5	3629456
	CA*F4860*6B*+EEP		35,000	24,900	14.0	12.0	3629510
	CA*F4860*6B*+TXV	A*VC81155CXA*	34,600	24,600	15.0	12.5	4588911
	CA*F4860*6B*+TXV	G*V950704CXA*	34,600	24,600	15.0	12.5	4588812
	CA*F4860*6B*+TXV	G*VC81155CXA*	34,600	24,600	15.0	12.5	4392968
	CA*F4860*6B*+TXV	G*VC80905CXA*	34,600	24,600	15.0	12.5	4392967
	CA*F4860*6B*+TXV	A*VC80905CXA*	34,600	24,600	15.0	12.5	4392966
	CA*F4860*6B*+TXV	G*VC950714CXA*	34,600	24,600	15.0	12.5	4201861
	CA*F4860*6B*+TXV	A*VC950714CXA*	34,600	24,600	15.0	12.5	4201860
	CA*F4860*6B*+TXV	A*VC950704CXA*	34,600	24,600	15.0	12.5	3858183
	CA*F4860*6B*+TXV	G*VC950704CXA*	34,600	24,600	15.0	12.5	3629489
	CA*F4860*6B*+TXV	G*V950704C**	34,600	24,600	15.0	12.5	3629470
	CA*F4860*6D*	A*VC81155CXA*	34,600	24,600	14.5	12.5	4588913
	CA*F4860*6D*	A*VC80905CXA*	34,600	24,600	14.5	12.5	4588912
	CA*F4860*6D*	G*VC81155CXA*	34,600	24,600	14.5	12.5	4392965
	CA*F4860*6D*	G*VC80905CXA*	34,600	24,600	14.5	12.5	4392964
	CA*F4860*6D*	G*VC950915DXA*	34,600	24,600	15.0	12.5	4201875
	CA*F4860*6D*	A*VC950915DXA*	34,600	24,600	15.0	12.5	4201874
	CA*F4860*6D*	G*VC950714CXA*	34,600	24,600	14.5	12.2	4201863
	CA*F4860*6D*	A*VC950714CXA*	34,600	24,600	14.5	12.2	4201862
	CA*F4860*6D*	G*VC950905CXA*	34,600	24,600	15.0	12.5	4201323
	CA*F4860*6D*	A*VC950905CXA*	34,600	24,600	15.0	12.5	4201322
	CA*F4860*6D*	G*VC951155DXA*	34,600	24,600	14.5	12.2	3880220
	CA*F4860*6D*	G*VC950905DXA*	34,600	24,600	15.0	12.5	3880219
	CA*F4860*6D*	G*VC950704CXA*	34,600	24,600	14.5	12.2	3880218
	CA*F4860*6D*	G*V951155DXA*	34,600	24,600	14.5	12.2	3880217
	CA*F4860*6D*	G*V950905DXA*	34,600	24,600	15.0	12.5	3880216
	CA*F4860*6D*	G*V950704CXA*	34,600	24,600	14.5	12.2	3880215
	CA*F4860*6D*	A*VC951155DXA*	34,600	24,600	14.5	12.2	3880212
	CA*F4860*6D*	A*VC950905DXA*	34,600	24,600	15.0	12.5	3880211
	CA*F4860*6D*	A*VC950704CXA*	34,600	24,600	14.5	12.2	3880210
	CA*F4860*6D*	G*E81155C**	34,600	24,600	15.0	12.5	3880214
	CA*F4860*6D*	G*E80905C**	34,600	24,600	15.0	12.5	3880213
	CA*F4860*6D*+EEP		35,000	24,900	14.0	12.0	3880272
	CA*F4860*6D*+TXV	A*VC81155CXA*	34,600	24,600	15.0	12.5	4588914
	CA*F4860*6D*+TXV	G*VC81155CXA*	34,600	24,600	15.0	12.5	4392969

See Notes on Page 57.

AHRI RATINGS (CONT.)

OUTDOOR UNIT	INDOOR UNITS		COOLING CAPACITY (BTU/H)				AHRI #
	COILS & AIR HANDLERS	FURNACES/BLOWERS	TOTAL	SENSIBLE	SEER[1]	EER[2]	
SSX14 0361B* (cont.)	CA*F4860*6D*+TXV	G*VC80905CXA*	34,600	24,600	15.0	12.5	4254044
	CA*F4860*6D*+TXV	A*VC80905CXA*	34,600	24,600	15.0	12.5	4254043
	CA*F4860*6D*+TXV	G*VC950714CXA*	34,600	24,600	15.0	12.5	4201865
	CA*F4860*6D*+TXV	A*VC950714CXA*	34,600	24,600	15.0	12.5	4201864
	CA*F4860*6D*+TXV	G*VC950704CXA*	34,600	24,600	15.0	12.5	3880503
	CA*F4860*6D*+TXV	G*V950704CXA*	34,600	24,600	15.0	12.5	3880502
	CA*F4860*6D*+TXV	A*VC950704CXA*	34,600	24,600	15.0	12.5	3880501
	CHPF3642C6C*	A*VC81155CXA*	34,600	24,600	14.5	12.2	4588916
	CHPF3642C6C*	A*VC80905CXA*	34,600	24,600	14.5	12.2	4588915
	CHPF3642C6C*	G*V950704CXA*	34,600	24,600	14.5	12.2	4588813
	CHPF3642C6C*	G*VC81155CXA*	34,600	24,600	14.5	12.2	4392971
	CHPF3642C6C*	G*VC80905CXA*	34,600	24,600	14.5	12.2	4392970
	CHPF3642C6C*	G*VC950714CXA*	34,600	24,600	14.5	12.2	4201867
	CHPF3642C6C*	A*VC950714CXA*	34,600	24,600	14.5	12.2	4201866
	CHPF3642C6C*	A*VC950704CXA*	34,600	24,600	14.5	12.2	3858184
	CHPF3642C6C*	G*VC950704CXA*	34,600	24,600	14.5	12.2	3629490
	CHPF3642C6C*	G*V950704C**	34,600	24,600	14.5	12.2	3629471
	CHPF3642C6C*	G*E81155C**	34,600	24,600	15.0	12.5	3629459
	CHPF3642C6C*	G*E80905C**	34,600	24,600	15.0	12.5	3629457
	CHPF3642C6C*+EEP		34,600	24,600	14.0	12.0	4392972
	CHPF3642C6C*+TXV	G*VC950714CXA*	34,600	24,600	15.0	12.2	4588207
	CHPF3642C6C*+TXV	G*VC81155CXA*	34,600	24,600	15.0	12.2	4588201
	CHPF3642C6C*+TXV	G*VC950704CXA*	34,600	24,600	15.0	12.2	4588190
	CHPF3642D6C*	A*VC80704BXA*	34,600	24,600	14.5	12.2	4588917
	CHPF3642D6C*	G*V951155DXA*	34,600	24,600	15.0	12.2	4588815
	CHPF3642D6C*	G*V950704CXA*	34,600	24,600	14.5	12.2	4588814
	CHPF3642D6C*	G*VC80704BXA*	34,600	24,600	14.5	12.2	4392973
	CHPF3642D6C*	A*VC951155DXA*	34,600	24,600	15.0	12.2	3858189
	CHPF3642D6C*	G*VC951155DXA*	34,600	24,600	15.0	12.2	3629498
	CHPF3642D6C*	G*V951155D**	34,600	24,600	15.0	12.2	3629481
	CHPF3642D6C*	G*V950704C**	34,600	24,600	14.5	12.2	3629472
	CHPF3642D6C*+EEP		34,600	24,600	14.0	12.0	3706349
	CHPF3642D6C*	MBE2000**-1B*	35,000	24,900	15.0	12.5	3629511
	CHPF3642D6C*	MBVC2000**-1A*	35,000	24,900	15.0	12.5	4559622
	CHPF3743D6B*	A*VC950905CXA*	34,400	24,400	14.5	12.2	4588918
	CHPF3743D6B*	G*VC950905CXA*	34,400	24,400	14.5	12.2	4216687
	CHPF3743D6B*+EEP+TXV		34,600	24,600	14.5	12.2	4216686
	CSCF3642N6C*	A*VC80704BXA*	34,600	24,600	14.5	12.2	4588919
	CSCF3642N6C*	G*VC80704BXA*	34,600	24,600	14.5	12.2	4392974
	CSCF4860N6C*	A*VC951155DXA*	34,600	24,600	14.5	12.2	4588923
	CSCF4860N6C*	A*VC950704CXA*	34,600	24,600	14.5	12.2	4588922
	CSCF4860N6C*	A*VC81155CXA*	34,600	24,600	14.5	12.2	4588921
	CSCF4860N6C*	A*VC80905CXA*	34,600	24,600	14.5	12.2	4588920
	CSCF4860N6C*	G*V951155DXA*	34,600	24,600	14.5	12.2	4588819
	CSCF4860N6C*	G*V950905DXA*	34,600	24,600	14.5	12.2	4588818
	CSCF4860N6C*	G*V950704CXA*	34,600	24,600	14.5	12.2	4588817
	CSCF4860N6C*	G*VC950915CXA*	34,400	24,400	14.5	12.2	4588816
	CSCF4860N6C*	A*VC950714CXA*	34,600	24,600	14.5	12.2	4586438
	CSCF4860N6C*	G*VC81155CXA*	34,600	24,600	14.5	12.2	4392976
	CSCF4860N6C*	G*VC80905CXA*	34,600	24,600	14.5	12.2	4392975
	CSCF4860N6C*	G*VC950714CXA*	34,600	24,600	14.5	12.2	4201868
	CSCF4860N6C*	A*VC950915CXA*	34,400	24,400	14.5	12.2	4201324

See Notes on Page 57.

AHRI RATINGS (CONT.)

OUTDOOR UNIT	INDOOR UNITS		COOLING CAPACITY (BTU/H)				AHRI #
	COILS & AIR HANDLERS	FURNACES/BLOWERS	TOTAL	SENSIBLE	SEER[1]	EER[2]	
SSX14 0421B*	CSCF4860N6C*	G*VC951155DXA*	34,600	24,600	14.5	12.2	3629499
	CSCF4860N6C*	G*VC950704CXA*	34,600	24,600	14.5	12.2	3629491
	CSCF4860N6C*	G*V951155D**	34,600	24,600	14.5	12.2	3629482
	CSCF4860N6C*	G*V950905D**	34,600	24,600	14.5	12.2	3629477
	CSCF4860N6C*	G*V950704C**	34,600	24,600	14.5	12.2	3629473
	CSCF4860N6C*	G*E81155C**	34,600	24,600	15.0	12.5	3629460
	CSCF4860N6C*+EEP		34,600	24,600	14.0	12.0	4588189
	CSCF4860N6C*+EEP+TXV		35,000	24,900	14.5	12.2	3629513
	CSCF4860N6C*+TXV	G*VC950714CXA*	34,600	24,600	15.0	12.2	4588208
	CSCF4860N6C*+TXV	G*VC950704CXA*	34,600	24,600	15.0	12.2	4588187
	CT*F4860*6A*	A*VC950915DXA*	34,600	24,600	15.0	12.5	4588924
	CT*F4860*6A*	A*VC950714CXA*	34,600	24,600	14.5	12.2	4586439
	CT*F4860*6A*	G*VC950915DXA*	34,600	24,600	15.0	12.5	4201876
	CT*F4860*6A*	G*VC950714CXA*	34,600	24,600	14.5	12.2	4201869
	CA*F3743*6A*+TXV	G*VC950915DXA*	40,000	28,400	14.5	12.2	4201896
	CA*F3743*6A*+TXV	A*VC950915DXA*	40,000	28,400	14.5	12.2	4201895
	CA*F3743*6D*+TXV	G*VC950915DXA*	40,000	28,400	14.5	12.2	4415164
	CA*F3743*6D*+TXV	A*VC950915DXA*	40,000	28,400	14.5	12.2	4415163
	CA*F4860*6B*	G*VC950915DXA*	40,000	28,400	15.0	12.5	4201898
	CA*F4860*6B*	A*VC950915DXA*	40,000	28,400	15.0	12.5	4201897
	CA*F4860*6B*	G*VC950714CXA*	39,500	28,000	14.0	12.0	4201886
	CA*F4860*6B*	A*VC950714CXA*	39,500	28,000	14.0	12.0	4201885
	CA*F4860*6D*	G*VC950915DXA*	40,000	28,400	15.0	12.5	4201900
	CA*F4860*6D*	A*VC950915DXA*	40,000	28,400	15.0	12.5	4201899
	CA*F4860*6D*	G*VC950714CXA*	39,500	28,000	14.0	12.0	4201888
	CA*F4860*6D*	A*VC950714CXA*	39,500	28,000	14.0	12.0	4201887
	CHPF4860D6C*	A*VC950915DXA*	40,000	28,400	15.0	12.5	4594613
	CHPF4860D6C*	A*VC950714CXA*	40,000	28,400	14.0	12.0	4586440
	CHPF4860D6C*	G*VC950915DXA*	40,000	28,400	15.0	12.5	4201901
	CHPF4860D6C*	G*VC950714CXA*	40,000	28,400	14.0	12.0	4201889
	CHPF4860D6D*	G*VC950915DXA*	40,000	28,400	15.0	12.5	4201903
	CHPF4860D6D*	A*VC950915DXA*	40,000	28,400	15.0	12.5	4201902
	CHPF4860D6D*	G*VC950714CXA*	40,000	28,400	14.0	12.0	4201891
	CHPF4860D6D*	A*VC950714CXA*	40,000	28,400	14.0	12.0	4201890
	CSCF4860N6C*	G*VC950915DXA*	40,000	28,400	15.0	12.5	4201905
	CSCF4860N6C*	A*VC950915DXA*	40,000	28,400	15.0	12.5	4201904
	CSCF4860N6C*	G*VC950714CXA*	40,000	28,400	14.0	12.0	4201893
	CSCF4860N6C*	A*VC950714CXA*	40,000	28,400	14.0	12.0	4201892
	CT*F4860*6A*	A*VC950915DXA*	40,000	28,400	15.0	12.5	4594614
	CT*F4860*6A*	A*VC950714CXA*	39,500	28,000	14.0	12.0	4586441
	CT*F4860*6A*	G*VC950915DXA*	40,000	28,400	15.0	12.5	4201906
	CT*F4860*6A*	G*VC950714CXA*	39,500	28,000	14.0	12.0	4201894
SSX14 0421C*	AEPF426016C*		40,000	28,400	15.0	12.5	3698205
	AR*F374316B*		40,000	28,400	14.5	12.2	3698206
	AR*F374316C*		40,000	28,400	14.5	12.2	4358304
	AR*F486016C*		40,000	28,400	14.5	12.2	4585884
	ASPF426016B*		40,000	28,400	15.0	12.5	3698207
	ASPF426016C*		40,000	28,400	15.0	12.5	4358305
	ASPF426016D*		40,000	28,400	15.0	12.5	4149270
	ASPF426016E*		40,000	28,400	15.0	12.5	4358306
	AVPTC426014A*		40,000	28,400	15.0	12.5	4431268
	CA*F3743*6A*+EEP+TXV		40,000	28,400	14.5	12.2	4216689

See Notes on Page 57.

AHRI RATINGS (CONT.)

OUTDOOR UNIT	INDOOR UNITS		COOLING CAPACITY (BTU/H)				AHRI #
	COILS & AIR HANDLERS	FURNACES/BLOWERS	TOTAL	SENSIBLE	SEER[1]	EER[2]	
SSX14 0421C* (cont.)	CA*F3743*6A*+TXV	G*VC950915DXA*	40,000	28,400	14.5	12.2	4201915
	CA*F3743*6A*+TXV	A*VC950915DXA*	40,000	28,400	14.5	12.2	4201914
	CA*F3743*6A*+TXV	A*VC950905CXA*	40,000	28,400	14.5	12.2	4201343
	CA*F3743*6A*+TXV	G*VC950905CXA*	40,000	28,400	14.5	12.2	4201342
	CA*F3743*6A*+TXV	A*VC951155DXA*	40,000	28,400	14.5	12.2	3858191
	CA*F3743*6A*+TXV	A*VC950905DXA*	40,000	28,400	14.5	12.2	3858190
	CA*F3743*6A*+TXV	G*VC951155DXA*	40,000	28,400	14.5	12.2	3698211
	CA*F3743*6A*+TXV	G*VC950905DXA*	40,000	28,400	14.5	12.2	3698210
	CA*F3743*6A*+TXV	G*V951155DXA*	40,000	28,400	14.5	12.2	3698209
	CA*F3743*6A*+TXV	G*V950905DXA*	40,000	28,400	14.5	12.2	3698208
	CA*F3743*6D*+EEP+TXV		40,000	28,400	14.5	12.2	4415179
	CA*F3743*6D*+TXV	G*VC950915DXA*	40,000	28,400	14.5	12.2	4415166
	CA*F3743*6D*+TXV	A*VC950915DXA*	40,000	28,400	14.5	12.2	4415165
	CA*F3743*6D*+TXV	A*VC950905CXA*	40,000	28,400	14.5	12.2	4415149
	CA*F3743*6D*+TXV	G*VC950905CXA*	40,000	28,400	14.5	12.2	4415148
	CA*F3743*6D*+TXV	A*VC951155DXA*	40,000	28,400	14.5	12.2	4415140
	CA*F3743*6D*+TXV	A*VC950905DXA*	40,000	28,400	14.5	12.2	4415139
	CA*F3743*6D*+TXV	G*VC951155DXA*	40,000	28,400	14.5	12.2	4415110
	CA*F3743*6D*+TXV	G*VC950905DXA*	40,000	28,400	14.5	12.2	4415109
	CA*F4860*6B*	A*VC81155CXA*	39,500	28,000	14.0	12.0	4588926
	CA*F4860*6B*	A*VC80905CXA*	39,500	28,000	14.0	12.0	4588925
	CA*F4860*6B*	G*VC81155CXA*	39,500	28,000	14.0	12.0	4392978
	CA*F4860*6B*	G*VC80905CXA*	39,500	28,000	14.0	12.0	4392977
	CA*F4860*6B*	G*VC950915DXA*	40,000	28,400	14.7	12.5	4201917
	CA*F4860*6B*	A*VC950915DXA*	40,000	28,400	14.7	12.5	4201916
	CA*F4860*6B*	G*VC950714CXA*	40,000	28,400	14.0	12.0	4201908
	CA*F4860*6B*	A*VC950714CXA*	40,000	28,400	14.0	12.0	4201907
	CA*F4860*6B*	A*VC950905CXA*	40,000	28,400	14.7	12.5	4201345
	CA*F4860*6B*	G*VC950905CXA*	40,000	28,400	14.7	12.5	4201344
	CA*F4860*6B*	A*VC951155DXA*	40,000	28,400	14.7	12.5	3858194
	CA*F4860*6B*	A*VC950905DXA*	40,000	28,400	14.7	12.5	3858193
	CA*F4860*6B*	A*VC950704CXA*	40,000	28,400	14.0	12.0	3858192
	CA*F4860*6B*	G*VC951155DXA*	40,000	28,400	14.7	12.5	3698217
	CA*F4860*6B*	G*VC950905DXA*	40,000	28,400	14.7	12.5	3698216
	CA*F4860*6B*	G*VC950704CXA*	40,000	28,400	14.0	12.0	3698215
	CA*F4860*6B*	G*V951155DXA*	40,000	28,400	14.7	12.5	3698214
	CA*F4860*6B*	G*V950905DXA*	40,000	28,400	14.7	12.5	3698213
	CA*F4860*6B*	G*V950704CXA*	40,000	28,400	14.0	12.0	3698212
	CA*F4860*6B*+EEP		40,000	28,400	14.0	12.0	3698218
	CA*F4860*6B*	MBE2000**-1B*	40,000	28,400	15.0	12.5	3706348
	CA*F4860*6B*	MBVC2000**-1A*	40,000	28,400	15.0	12.5	3698219
	CA*F4860*6D*	A*VC81155CXA*	39,500	28,000	14.0	12.0	4588928
	CA*F4860*6D*	A*VC80905CXA*	39,500	28,000	14.0	12.0	4588927
	CA*F4860*6D*	G*VC81155CXA*	39,500	28,000	14.0	12.0	4392980
	CA*F4860*6D*	G*VC80905CXA*	39,500	28,000	14.0	12.0	4392979
	CA*F4860*6D*	G*VC950915DXA*	40,000	28,400	14.7	12.5	4201919
	CA*F4860*6D*	A*VC950915DXA*	40,000	28,400	14.7	12.5	4201918
	CA*F4860*6D*	G*VC950714CXA*	40,000	28,400	14.0	12.0	4201910
	CA*F4860*6D*	A*VC950714CXA*	40,000	28,400	14.0	12.0	4201909
	CA*F4860*6D*	G*VC950905CXA*	40,000	28,400	14.7	12.5	4201347
	CA*F4860*6D*	A*VC950905CXA*	40,000	28,400	14.7	12.5	4201346
	CA*F4860*6D*	G*VC951155DXA*	40,000	28,400	14.7	12.5	3880246

See Notes on Page 57.

AHRI RATINGS (CONT.)

OUTDOOR UNIT	INDOOR UNITS		COOLING CAPACITY (BTU/H)				AHRI #
	COILS & AIR HANDLERS	FURNACES/BLOWERS	TOTAL	SENSIBLE	SEER[1]	EER[2]	
SSX14 0421C* (cont.)	CA*F4860*6D*	G*VC950905DXA*	40,000	28,400	14.7	12.5	3880245
	CA*F4860*6D*	G*VC950704CXA*	40,000	28,400	14.0	12.0	3880244
	CA*F4860*6D*	G*V951155DXA*	40,000	28,400	14.7	12.5	3880243
	CA*F4860*6D*	G*V950905DXA*	40,000	28,400	14.7	12.5	3880242
	CA*F4860*6D*	G*V950704CXA*	40,000	28,400	14.0	12.0	3880241
	CA*F4860*6D*	A*VC951155DXA*	40,000	28,400	14.7	12.5	3880240
	CA*F4860*6D*	A*VC950905DXA*	40,000	28,400	14.7	12.5	3880239
	CA*F4860*6D*	A*VC950704CXA*	40,000	28,400	14.0	12.0	3880238
	CA*F4860*6D*+EEP		40,000	28,400	14.0	12.0	4392983
	CA*F4860*6D*	MBE2000**-1B*	40,000	28,400	15.0	12.5	3880297
	CA*F4860*6D*	MBVC2000**-1A*	40,000	28,400	15.0	12.5	3880329
	CA*F4961*6A*+EEP		40,000	28,400	14.5	12.2	3698220
	CA*F4961*6D*+EEP		40,000	28,400	14.5	12.2	4431653
	CHPF3743D6B*+EEP+TXV		40,000	28,400	14.5	12.2	3698221
	CHPF4860D6D*	A*VC81155CXA*	39,500	28,000	14.0	12.0	4588930
	CHPF4860D6D*	A*VC80905CXA*	39,500	28,000	14.0	12.0	4588929
	CHPF4860D6D*	G*VC81155CXA*	39,500	28,000	14.0	12.0	4392985
	CHPF4860D6D*	G*VC80905CXA*	39,500	28,000	14.0	12.0	4392984
	CHPF4860D6D*	G*VC950915DXA*	40,000	28,400	15.0	12.5	4201921
	CHPF4860D6D*	A*VC950915DXA*	40,000	28,400	15.0	12.5	4201920
	CHPF4860D6D*	G*VC950714CXA*	40,000	28,400	14.0	12.0	4201912
	CHPF4860D6D*	A*VC950714CXA*	40,000	28,400	14.0	12.0	4201911
	CHPF4860D6D*	A*VC950905CXA*	40,000	28,400	15.0	12.5	4201349
	CHPF4860D6D*	G*VC950905CXA*	40,000	28,400	15.0	12.5	4201348
	CHPF4860D6D*	A*VC951155DXA*	40,000	28,400	15.0	12.5	3858197
	CHPF4860D6D*	A*VC950905DXA*	40,000	28,400	15.0	12.5	3858196
	CHPF4860D6D*	A*VC950704CXA*	40,000	28,400	14.0	12.0	3858195
	CHPF4860D6D*	G*VC951155DXA*	40,000	28,400	15.0	12.5	3706345
	CHPF4860D6D*	G*V951155DXA*	40,000	28,400	15.0	12.5	3706344
	CHPF4860D6D*	G*VC950905DXA*	40,000	28,400	15.0	12.5	3698225
	CHPF4860D6D*	G*VC950704CXA*	40,000	28,400	14.0	12.0	3698224
	CHPF4860D6D*	G*V950905DXA*	40,000	28,400	15.0	12.5	3698223
	CHPF4860D6D*	G*V950704CXA*	40,000	28,400	14.0	12.0	3698222
	CHPF4860D6D*+EEP		40,000	28,400	14.0	12.0	3698226
	CHPF4860D6D*	MBE2000**-1B*	40,000	28,400	15.0	12.5	3698227
	CHPF4860D6D*	MBVC2000**-1A*	40,000	28,400	15.0	12.5	3698228
	CSCF4860N6C*	A*VC951155DXA*	40,000	28,400	15.0	12.5	4588937
	CSCF4860N6C*	A*VC950915DXA*	40,000	28,400	15.0	12.5	4588936
	CSCF4860N6C*	A*VC950905DXA*	40,000	28,400	15.0	12.5	4588935
	CSCF4860N6C*	A*VC950905CXA*	40,000	28,400	15.0	12.5	4588934
	CSCF4860N6C*	A*VC950704CXA*	40,000	28,400	14.5	12.2	4588933
	CSCF4860N6C*	A*VC81155CXA*	39,500	28,000	14.0	12.0	4588932
	CSCF4860N6C*	A*VC80905CXA*	39,500	28,000	14.0	12.0	4588931
	CSCF4860N6C*	A*VC950714CXA*	40,000	28,400	14.5	12.2	4586442
	CSCF4860N6C*	G*VC81155CXA*	39,500	28,000	14.0	12.0	4392982
	CSCF4860N6C*	G*VC80905CXA*	39,500	28,000	14.0	12.0	4392981
	CSCF4860N6C*	G*VC950915DXA*	40,000	28,400	15.0	12.5	4201922
	CSCF4860N6C*	G*VC950714CXA*	40,000	28,400	14.5	12.2	4201913
	CSCF4860N6C*	G*VC950905CXA*	40,000	28,400	15.0	12.5	4201350
	CSCF4860N6C*	G*VC951155DXA*	40,000	28,400	15.0	12.5	3706347
	CSCF4860N6C*	G*V951155DXA*	40,000	28,400	15.0	12.5	3706346
	CSCF4860N6C*	G*VC950905DXA*	40,000	28,400	15.0	12.5	3698232

See Notes on Page 57.

AHRI RATINGS (CONT.)

OUTDOOR UNIT	INDOOR UNITS		COOLING CAPACITY (BTU/H)				AHRI #
	COILS & AIR HANDLERS	FURNACES/BLOWERS	TOTAL	SENSIBLE	SEER[1]	EER[2]	
SSX14 0421C* (cont.)	CSCF4860N6C*	G*VC950704CXA*	40,000	28,400	14.5	12.2	3698231
	CSCF4860N6C*	G*V950905DXA*	40,000	28,400	15.0	12.5	3698230
	CSCF4860N6C*	G*V950704CXA*	40,000	28,400	14.5	12.2	3698229
	CSCF4860N6C*+EEP		40,000	28,400	14.0	12.0	3698233
	CSCF4860N6C*+EEP+TXV		40,000	28,400	14.5	12.2	3698234
	CSCF4860N6C*	MBE2000**-1B*	40,000	28,400	15.0	12.5	3698235
	CSCF4860N6C*	MBVC2000**-1A*	40,000	28,400	15.0	12.5	3698236
SSX14 0481A*	ADPF486016B*		45,000	32,000	13.5	11.5	3060290
	ADPF486016C*		45,000	32,000	13.5	11.5	4358266
	AEPF426016C*		46,000	32,700	14.5	12.2	1492522
	AR*F374316B*		46,000	32,700	14.0	12.0	1492523
	AR*F374316C*		46,000	32,700	14.0	12.0	4358307
	AR*F486016B*		45,000	32,000	14.0	12.0	1492524
	AR*F486016C*		45,000	32,000	14.0	12.0	3896056
	AR*F496116A*		45,000	32,000	14.0	12.0	3018290
	AR*F496116C*		45,000	32,000	14.0	12.0	4358267
	ASPF426016B*		47,000	33,400	15.0	12.5	1492525
	ASPF426016B*+TXV		46,000	32,700	15.0	12.0	1492526
	ASPF426016C*		47,000	33,400	15.0	12.5	4358308
	ASPF426016C*+TXV		46,000	32,700	15.0	12.0	4358309
	ASPF426016D*		47,000	33,400	15.0	12.5	4149271
	ASPF426016D*+TXV		46,000	32,700	15.0	12.0	4149272
	ASPF426016E*		47,000	33,400	15.0	12.5	4358310
	ASPF426016E*+TXV		46,000	32,700	15.0	12.0	4358311
	AT*F374316A*		46,000	32,700	14.0	12.0	1483485
	AVPTC426014A*		46,000	32,700	14.5	12.2	4431275
	CA*F4860*6B*	G*VC80905CXA*	46,000	32,700	15.0	13.0	4392986
	CA*F4860*6B*	G*VC950915DXA*	45,500	32,300	15.0	12.5	4201924
	CA*F4860*6B*	A*VC950915DXA*	45,500	32,300	15.0	12.5	4201923
	CA*F4860*6B*	G*VC950905CXA*	45,500	32,300	15.0	12.5	4201352
	CA*F4860*6B*	A*VC950905CXA*	45,500	32,300	15.0	12.5	4201351
	CA*F4860*6B*	A*VC951155DXA*	45,500	32,300	15.0	12.5	3858199
	CA*F4860*6B*	MBVC2000**-1A*	46,000	32,700	15.0	13.0	3609481
	CA*F4860*6B*	G*VC951155DXA*	45,500	32,300	15.0	12.5	3598906
	CA*F4860*6B*	G*VC950905DXA*	45,500	32,300	15.0	12.5	3598674
	CA*F4860*6B*	A*VC950905DXA*	45,500	32,300	15.0	12.5	3597574
	CA*F4860*6B*	A*VC90905DXA*	45,500	32,300	15.0	12.5	3597501
	CA*F4860*6B*	A*V90905D**	45,500	32,300	15.0	12.5	3062078
	CA*F4860*6B*	G*V951155D**	45,500	32,300	15.0	12.5	1346654
	CA*F4860*6B*	G*V950905D**	45,500	32,300	15.0	12.5	1346653
	CA*F4860*6B*+EEP		46,000	32,700	14.0	12.0	1347139
	CA*F4860*6B*+TXV	G*E81155C**	46,000	32,700	14.5	12.0	1347140
	CA*F4860*6B*+TXV	G*E80905C**	45,500	32,300	14.5	12.0	1346656
	CA*F4860*6D*	G*VC80905CXA*	46,000	32,700	15.0	13.0	4392987
	CA*F4860*6D*	G*VC950915DXA*	45,500	32,300	15.0	12.5	4201926
	CA*F4860*6D*	A*VC950915DXA*	45,500	32,300	15.0	12.5	4201925
	CA*F4860*6D*	G*VC950905CXA*	45,500	32,300	15.0	12.5	4201354
	CA*F4860*6D*	A*VC950905CXA*	45,500	32,300	15.0	12.5	4201353
	CA*F4860*6D*	MBE2000**-1B*	46,000	32,700	15.0	13.0	3880286
	CA*F4860*6D*	G*VC951155DXA*	45,500	32,300	15.0	12.5	3880254
	CA*F4860*6D*	G*VC950905DXA*	45,500	32,300	15.0	12.5	3880253
	CA*F4860*6D*	G*V951155DXA*	45,500	32,300	15.0	12.5	3880252

See Notes on Page 57.

AHRI RATINGS (CONT.)

OUTDOOR UNIT	INDOOR UNITS		COOLING CAPACITY (BTU/H)				AHRI #
	COILS & AIR HANDLERS	FURNACES/BLOWERS	TOTAL	SENSIBLE	SEER[1]	EER[2]	
SSX14 0481A* (cont.)	CA*F4860*6D*	G*V950905DXA*	45,500	32,300	15.0	12.5	3880251
	CA*F4860*6D*	A*VC951155DXA*	45,500	32,300	15.0	12.5	3880250
	CA*F4860*6D*	A*VC950905DXA*	45,500	32,300	15.0	12.5	3880249
	CA*F4860*6D*	A*VC90905DXA*	45,500	32,300	15.0	12.5	3880248
	CA*F4860*6D*	A*V90905DX**	45,500	32,300	15.0	12.5	3880247
	CA*F4860*6D*	MBVC2000**-1A*	46,000	32,700	15.0	13.0	3880330
	CA*F4860*6D*+EEP		46,000	32,700	14.0	12.0	4585895
	CA*F4860*6D*+TXV	G*E81155C**	46,000	32,700	14.5	12.0	3880506
	CA*F4860*6D*+TXV	G*E80905C**	45,500	32,300	14.5	12.0	3880505
	CA*F4961*6A*+EEP+TXV		46,000	32,700	14.5	12.0	3345703
	CA*F4961*6D*+EEP+TXV		46,000	32,700	14.5	12.0	4431654
	CHPF4860D6C*	A*VC950915DXA*	45,500	32,300	15.0	12.5	4594615
	CHPF4860D6C*	G*VC950915DXA*	45,500	32,300	15.0	12.5	4201927
	CHPF4860D6D*	G*VC81155CXA*	46,000	32,700	15.0	12.5	4392988
	CHPF4860D6D*	G*VC950915DXA*	45,500	32,300	15.0	12.5	4201929
	CHPF4860D6D*	A*VC950915DXA*	45,500	32,300	15.0	12.5	4201928
	CHPF4860D6D*	A*VC950905CXA*	45,500	32,300	15.0	12.5	4201357
	CHPF4860D6D*	G*VC950905CXA*	45,500	32,300	15.0	12.5	4201356
	CHPF4860D6D*	A*VC951155DXA*	45,500	32,300	15.0	12.5	3858200
	CHPF4860D6D*	A*VC950905DXA*	45,500	32,300	15.0	12.5	3858198
	CHPF4860D6D*	MBVC2000**-1A*	46,000	32,700	15.5	13.0	3609483
	CHPF4860D6D*	G*VC951155DXA*	45,500	32,300	15.0	12.5	3598909
	CHPF4860D6D*	G*VC950905DXA*	45,500	32,300	15.0	12.5	3598677
	CHPF4860D6D*	G*VC90905DXA*	45,500	32,300	15.0	12.5	3597861
	CHPF4860D6D*	MBE2000**-1B*	46,000	32,700	15.5	13.0	3300161
	CHPF4860D6D*	G*V951155D**	45,500	32,300	15.0	12.5	3300074
	CHPF4860D6D*	G*V950905D**	45,500	32,300	15.0	12.5	3300073
	CHPF4860D6D*	G*V90905D**	45,500	32,300	15.0	12.5	3300072
	CHPF4860D6D*+EEP		46,000	32,700	14.0	12.0	3300075
	CHPF4860D6D*+EEP+TXV		46,000	32,700	14.5	12.0	3367402
	CHPF4860D6D*+TXV	G*VC80905CXA*	45,500	32,300	14.5	12.3	4392989
	CHPF4860D6D*+TXV	G*E81155C**	45,500	32,300	14.5	12.0	3300077
	CHPF4860D6D*+TXV	G*E80905C**	45,500	32,300	14.5	12.0	3300076
	CSCF4860N6C*	A*VC950915DXA*	45,500	32,300	14.5	12.3	4594616
	CSCF4860N6C*	G*VC950915DXA*	45,500	32,300	14.5	12.3	4201930
	CSCF4860N6C*	G*VC950905CXA*	45,500	32,300	14.5	12.3	4201358
	CSCF4860N6C*	G*VC951155DXA*	45,500	32,300	14.5	12.3	3598911
	CSCF4860N6C*	G*VC950905DXA*	45,500	32,300	14.5	12.3	3598679
	CSCF4860N6C*	G*V951155D**	45,500	32,300	14.5	12.3	1296839
	CSCF4860N6C*	G*V950905D**	45,500	32,300	14.5	12.3	1296838
	CSCF4860N6C*+EEP		46,000	32,700	14.0	12.0	1296840
	CT*F4860*6A*	A*VC950915DXA*	45,500	32,300	15.0	12.5	4594617
	CT*F4860*6A*	G*VC950915DXA*	45,500	32,300	15.0	12.5	4201931
SSX14 0481B*	ADPF486016B*		45,000	32,000	13.5	11.5	4323047
	ADPF486016C*		45,000	32,000	13.5	11.5	4588820
	AEPF426016C*		46,000	32,700	14.5	12.2	4323048
	AR*F374316B*		45,500	32,300	14.0	12.0	4323049
	AR*F374316C*		45,500	32,300	14.0	12.0	4559588
	AR*F486016B*		45,000	32,000	14.0	12.0	4588821
	AR*F486016C*		45,000	32,000	14.0	12.0	4323050
	AR*F496116A*		45,000	32,000	14.0	12.0	4323051
	AR*F496116C*		45,000	32,000	14.0	12.0	4588822

See Notes on Page 57.

AHRI RATINGS (CONT.)

OUTDOOR UNIT	INDOOR UNITS		COOLING CAPACITY (BTU/H)				AHRI #
	COILS & AIR HANDLERS	FURNACES/BLOWERS	TOTAL	SENSIBLE	SEER[1]	EER[2]	
SSX14 0481B* (cont.)	ASPF426016B*		47,000	33,400	15.0	12.5	4323052
	ASPF426016B*+TXV		46,000	32,700	15.0	12.0	4588823
	ASPF426016C*		47,000	33,400	15.0	12.5	4588824
	ASPF426016C*+TXV		46,000	32,700	15.0	12.0	4588825
	ASPF426016D*		47,000	33,400	15.0	12.5	4323053
	AT*F374316A*		46,000	32,700	14.0	12.0	4588826
	AVPTC426014A*		46,000	32,700	14.5	12.2	4431276
	CA*F4860*6B*	A*VC951155DXA*	45,500	32,300	15.0	12.5	4588940
	CA*F4860*6B*	A*VC950905DXA*	45,500	32,300	15.0	12.5	4588939
	CA*F4860*6B*	A*VC90905DXA*	45,500	32,300	15.0	12.5	4588938
	CA*F4860*6B*	MBE2000**-1B*	46,000	32,700	15.0	13.0	4588834
	CA*F4860*6B*	G*V951155DXA*	45,500	32,300	15.0	12.5	4588832
	CA*F4860*6B*	G*V950905DXA*	45,500	32,300	15.0	12.5	4588831
	CA*F4860*6B*	G*VC951155DXA*	45,500	32,300	15.0	12.5	4588830
	CA*F4860*6B*	G*VC950905DXA*	45,500	32,300	15.0	12.5	4588829
	CA*F4860*6B*	A*V90905DX**	45,500	32,300	15.0	12.5	4588827
	CA*F4860*6B*	MBVC2000**-1A*	46,000	32,700	15.0	13.0	4559589
	CA*F4860*6B*	G*VC90905DXA*	45,500	32,300	15.0	12.5	4588828
	CA*F4860*6B*+EEP		46,000	32,700	14.0	12.0	4588833
	CA*F4860*6B*+TXV	G*E81155C**	46,000	32,700	14.5	12.0	4588836
	CA*F4860*6B*+TXV	G*E80905C**	45,500	32,300	14.5	12.0	4588835
	CA*F4860*6D*	A*VC90905DXA*	45,500	32,300	15.0	12.5	4588941
	CA*F4860*6D*	G*V951155DXA*	45,500	32,300	15.0	12.5	4588840
	CA*F4860*6D*	G*V950905DXA*	45,500	32,300	15.0	12.5	4588839
	CA*F4860*6D*	A*V90905DX**	45,500	32,300	15.0	12.5	4588837
	CA*F4860*6D*	G*VC950915DXA*	45,500	32,300	15.0	12.5	4342769
	CA*F4860*6D*	A*VC950915DXA*	45,500	32,300	15.0	12.5	4342767
	CA*F4860*6D*	MBE2000**-1B*	46,000	32,700	15.0	13.0	4323062
	CA*F4860*6D*	G*VC951155DXA*	45,500	32,300	15.0	12.5	4323059
	CA*F4860*6D*	G*VC950905DXA*	45,500	32,300	15.0	12.5	4323058
	CA*F4860*6D*	G*VC950905CXA*	45,500	32,300	15.0	12.5	4323057
	CA*F4860*6D*	A*VC951155DXA*	45,500	32,300	15.0	12.5	4323056
	CA*F4860*6D*	A*VC950905DXA*	45,500	32,300	15.0	12.5	4323055
	CA*F4860*6D*	A*VC950905CXA*	45,500	32,300	15.0	12.5	4323054
	CA*F4860*6D*	MBVC2000**-1A*	46,000	32,700	15.0	13.0	4323063
	CA*F4860*6D*	G*VC90905DXA*	45,500	32,300	15.0	12.5	4588838
	CA*F4860*6D*+EEP		45,500	32,300	14.0	12.0	4323060
	CA*F4860*6D*+EEP+TXV		45,500	32,300	14.0	12.0	4323061
	CA*F4860*6D*+TXV	G*E81155C**	45,500	32,300	14.5	12.0	4323065
	CA*F4860*6D*+TXV	G*E80905C**	45,000	32,000	14.5	12.0	4323064
	CA*F4961*6A*+EEP+TXV		46,000	32,700	14.5	12.0	4323066
	CA*F4961*6A*+TXV	MBE2000**-1B*	46,000	32,700	15.0	12.5	4323067
	CA*F4961*6A*+TXV	MBVC2000**-1A*	46,000	32,700	15.0	12.5	4323068
	CA*F4961*6D*+EEP+TXV		46,000	32,700	14.5	12.0	4431655
	CA*F4961*6D*+TXV	MBVC2000**-1A*	46,000	32,700	15.0	12.5	4431676
	CHPF4860D6D*	A*VC90905DXA*	45,500	32,300	15.0	12.5	4588942
	CHPF4860D6D*	G*V951155DXA*	45,500	32,300	15.0	12.5	4588843
	CHPF4860D6D*	G*V950905DXA*	45,500	32,300	15.0	12.5	4588842
	CHPF4860D6D*	G*V90905DX**	45,500	32,300	15.0	12.5	4588841
	CHPF4860D6D*	G*VC950915DXA*	45,500	32,300	15.0	12.5	4342770
	CHPF4860D6D*	A*VC950915DXA*	45,500	32,300	15.0	12.5	4342768
	CHPF4860D6D*	MBE2000**-1B*	46,000	32,700	15.0	13.0	4323277
	CHPF4860D6D*	G*VC951155DXA*	45,500	32,300	15.0	12.5	4323074
	CHPF4860D6D*	G*VC950905DXA*	45,500	32,300	15.0	12.5	4323073
	CHPF4860D6D*	G*VC950905CXA*	45,500	32,300	15.0	12.5	4323072
	CHPF4860D6D*	A*VC951155DXA*	45,500	32,300	15.0	12.5	4323071

See Notes on Page 57.

AHRI RATINGS (CONT.)

OUTDOOR UNIT	INDOOR UNITS		COOLING CAPACITY (BTU/H)				AHRI #
	COILS & AIR HANDLERS	FURNACES/BLOWERS	TOTAL	SENSIBLE	SEER[1]	EER[2]	
SSX14 0481B* (cont.)	CHPF4860D6D*	A*VC950905DXA*	45,500	32,300	15.0	12.5	4323070
	CHPF4860D6D*	A*VC950905CXA*	45,500	32,300	15.0	12.5	4323069
	CHPF4860D6D*	MBVC2000**-1A*	46,000	32,700	15.5	13.0	4323077
	CHPF4860D6D*	G*VC90905DXA*	45,500	32,300	15.0	12.5	4588844
	CHPF4860D6D*+EEP		46,000	32,700	14.0	12.0	4323075
	CHPF4860D6D*+EEP+TXV		46,000	32,700	14.5	12.0	4323076
	CHPF4860D6D*+TXV	G*VC81155CXA*	45,500	32,300	14.5	12.0	4323083
	CHPF4860D6D*+TXV	G*VC80905CXA*	45,500	32,300	15.0	12.0	4323082
	CHPF4860D6D*+TXV	A*VC81155CXA*	45,500	32,300	14.5	12.0	4323079
	CHPF4860D6D*+TXV	A*VC80905CXA*	45,500	32,300	15.0	12.0	4323078
	CHPF4860D6D*+TXV	G*E81155C**	45,500	32,300	14.5	12.0	4323081
	CHPF4860D6D*+TXV	G*E80905C**	45,500	32,300	14.5	12.0	4323080
	CSCF4860N6C*	A*VC951155DXA*	45,500	32,300	14.5	12.3	4588948
	CSCF4860N6C*	A*VC950905DXA*	45,500	32,300	14.5	12.3	4588946
	CSCF4860N6C*	A*VC950905CXA*	45,500	32,300	14.5	12.3	4588944
	CSCF4860N6C*	G*V951155DXA*	45,500	32,300	14.5	12.3	4588846
	CSCF4860N6C*	G*V950905DXA*	45,500	32,300	14.5	12.3	4588845
	CSCF4860N6C*	A*VC950915DXA*	45,500	32,300	14.5	12.3	4342772
	CSCF4860N6C*	G*VC950915DXA*	45,500	32,300	14.5	12.3	4342771
	CSCF4860N6C*	G*VC81155CXA*	45,500	32,300	14.5	12.0	4323091
	CSCF4860N6C*	G*VC80905CXA*	45,500	32,300	15.0	12.0	4323090
	CSCF4860N6C*	A*VC81155CXA*	45,500	32,300	14.5	12.0	4323089
	CSCF4860N6C*	A*VC80905CXA*	45,500	32,300	15.0	12.0	4323088
	CSCF4860N6C*	G*VC951155DXA*	45,500	32,300	14.5	12.3	4323086
	CSCF4860N6C*	G*VC950905DXA*	45,500	32,300	14.5	12.3	4323085
	CSCF4860N6C*	G*VC950905CXA*	45,500	32,300	14.5	12.3	4323084
	CSCF4860N6C*+EEP		46,000	32,700	14.0	12.0	4323087
SSX14 0601A*	AEPF426016A*		56,000	40,900	14.3	11.7	1180828
	AEPF426016B*		56,000	40,900	14.3	11.7	1277836
	AEPF426016C*		56,000	40,900	14.3	11.7	1492527
	AR*F374316B*		57,000	41,600	13.5	11.5	1492528
	AR*F374316C*		57,000	41,600	13.5	11.5	4358268
	AR*F486016B*		56,000	40,900	13.5	11.5	1492529
	AR*F486016C*		56,000	40,900	13.5	11.5	3896057
	AR*F496116A*		56,000	40,900	13.5	11.5	3018291
	AR*F496116A*+TXV		56,000	40,900	13.5	11.5	3018334
	AR*F496116C*		56,000	40,900	13.5	11.5	4358269
	AR*F496116C*+TXV		56,000	40,900	13.5	11.5	4358270
	ARPF374316A*		57,000	41,600	13.5	11.5	1038341
	ARPF486016A*		56,000	40,900	13.5	11.5	1180830
	ARUF374316A*		57,000	41,600	13.5	11.5	1038340
	ARUF486016A*		56,000	40,900	13.5	11.5	1180829
	ASPF426016A*		57,000	41,600	14.5	12.0	1282741
	ASPF426016A*+TXV		56,000	40,900	15.0	12.5	1293250
	ASPF426016B*		57,000	41,600	14.5	12.0	1492530
	ASPF426016B*+TXV		56,000	40,900	15.0	12.5	1492531
	ASPF426016C*		57,000	41,600	14.5	12.0	4358271
	ASPF426016C*+TXV		56,000	40,900	15.0	12.5	4358272
	ASPF426016D*		57,000	41,600	14.5	12.0	4149273
	ASPF426016D*+TXV		56,000	40,900	15.0	12.5	4149274
	ASPF426016E*		57,000	41,600	14.5	12.0	4358273
	ASPF426016E*+TXV		56,000	40,900	15.0	12.5	4358274
	AT*F374316A*		57,000	41,600	13.5	11.5	1483486
	AT*F486016A*		56,000	40,900	13.5	11.5	1483519
	AVPTC426014A*		56,000	40,900	15.0	12.5	4431286
	CA*F4860*6B*	G*V951155DXA*	56,000	40,900	13.5	11.5	4588851

See Notes on Page 57.

AHRI RATINGS (CONT.)

OUTDOOR UNIT	INDOOR UNITS		COOLING CAPACITY (BTU/H)				AHRI #
	COILS & AIR HANDLERS	FURNACES/BLOWERS	TOTAL	SENSIBLE	SEER[1]	EER[2]	
SSX14 0601A* (cont.)	CA*F4860*6B*	G*V90905DX**	56,000	40,900	13.5	11.5	4588850
	CA*F4860*6B*	G*VC950915DXA*	56,000	40,900	13.5	11.5	4588849
	CA*F4860*6B*	G*VC950905DXA*	56,000	40,900	13.5	11.5	4588848
	CA*F4860*6B*	G*VC950905CXA*	56,000	40,900	13.5	11.5	4588847
	CA*F4860*6B*	A*VC950915DXA*	56,000	40,900	13.5	11.5	4201932
	CA*F4860*6B*	A*VC950905CXA*	56,000	40,900	13.5	11.5	4201360
	CA*F4860*6B*	A*VC950905DXA*	56,000	40,900	13.5	11.5	3635272
	CA*F4860*6B*	A*VC90905DXA*	56,000	40,900	13.5	11.5	3635271
	CA*F4860*6B*	A*VC951155DXA*	56,000	40,900	13.5	11.5	3607316
	CA*F4860*6B*	G*VC951155DXA*	56,000	40,900	13.5	11.5	3598953
	CA*F4860*6B*	G*VC90905DXA*	56,000	40,900	13.5	11.5	3597884
	CA*F4860*6B*	G*V951155D**	56,000	40,900	13.5	11.5	1346658
	CA*F4860*6B*	G*V90905D**	56,000	40,900	13.5	11.5	1346657
	CA*F4860*6B*+EEP		56,000	40,900	14.0	12.0	1347141
	CA*F4860*6B*	MBE2000**-1	56,000	40,900	15.0	12.5	1346659
	CA*F4860*6B*	MBE2000**-1B*	56,000	40,900	15.0	12.5	4588852
	CA*F4860*6B*	MBR2000**-1	56,000	40,900	14.0	12.0	1346660
	CA*F4860*6B*	MBVC2000**-1A*	56,000	40,900	15.0	12.5	3609486
	CA*F4860*6D*	G*V90905DX**	56,000	40,900	13.5	11.5	4588856
	CA*F4860*6D*	G*VC950915DXA*	56,000	40,900	13.5	11.5	4588855
	CA*F4860*6D*	G*VC950905DXA*	56,000	40,900	13.5	11.5	4588854
	CA*F4860*6D*	G*VC950905CXA*	56,000	40,900	13.5	11.5	4588853
	CA*F4860*6D*	A*VC950915DXA*	56,000	40,900	13.5	11.5	4201933
	CA*F4860*6D*	A*VC950905CXA*	56,000	40,900	13.5	11.5	4201361
	CA*F4860*6D*	G*VC951155DXA*	56,000	40,900	13.5	11.5	3880261
	CA*F4860*6D*	G*V951155DXA*	56,000	40,900	13.5	11.5	3880259
	CA*F4860*6D*	G*V90905D**	56,000	40,900	13.5	11.5	3880258
	CA*F4860*6D*	A*VC951155DXA*	56,000	40,900	13.5	11.5	3880257
	CA*F4860*6D*	A*VC950905DXA*	56,000	40,900	13.5	11.5	3880256
	CA*F4860*6D*	A*VC90905DXA*	56,000	40,900	13.5	11.5	3880255
	CA*F4860*6D*	G*VC90905DXA*	56,000	40,900	13.5	11.5	3880260
	CA*F4860*6D*	MBE2000**-1B*	56,000	40,900	15.0	12.5	3880287
	CA*F4860*6D*	MBR2000**-1	56,000	40,900	14.0	12.0	3880313
	CA*F4860*6D*	MBVC2000**-1A*	56,000	40,900	15.0	12.5	3880331
	CA*F4961*6A*+EEP+TXV		56,000	40,900	14.5	12.0	3345333
	CA*F4961*6A*+TXV	A*VC81155CXA*	57,000	41,600	14.5	12.3	4216697
	CA*F4961*6A*+TXV	G*VC81155CXA*	57,000	41,600	14.5	12.3	4216695
	CA*F4961*6A*+TXV	A*VC80905CXA*	57,000	41,600	14.5	12.3	4216693
	CA*F4961*6A*+TXV	G*VC80905CXA*	57,000	41,600	14.5	12.3	4216692
	CA*F4961*6D*+EEP+TXV		56,000	40,900	14.5	12.0	4431656
	CA*F4961*6D*+TXV	G*VC81155CXA*	57,000	41,600	14.5	12.3	4431766
	CA*F4961*6D*+TXV	G*VC80905CXA*	57,000	41,600	14.5	12.3	4431765
	CA*F4961*6D*+TXV	A*VC81155CXA*	57,000	41,600	14.5	12.3	4431764
	CA*F4961*6D*+TXV	A*VC80905CXA*	57,000	41,600	14.5	12.3	4431763
	CHPF4860D6C*	A*VC950915DXA*	56,000	40,900	13.5	11.5	4588962
	CHPF4860D6C*	G*VC950915DXA*	56,000	40,900	13.5	11.5	4201934
	CHPF4860D6C*	G*VC950905CXA*	56,000	40,900	13.5	11.5	4201362
	CHPF4860D6C*	G*VC951155DXA*	56,000	40,900	13.5	11.5	3598955
	CHPF4860D6C*	G*VC950905DXA*	56,000	40,900	13.5	11.5	3598719
	CHPF4860D6C*	G*V951155D**	56,000	40,900	13.5	11.5	1330606
	CHPF4860D6C*	G*V950905D**	56,000	40,900	13.5	11.5	1330605
	CHPF4860D6C*+EEP		56,000	40,900	14.0	12.0	1330631
	CHPF4860D6C*+EEP+TXV		56,000	40,900	14.5	12.0	3345474
	CHPF4860D6C*	MBR2000**-1A*	56,000	40,900	14.0	12.0	1330607
	CHPF4860D6D*	G*V951155DXA*	56,000	40,900	13.5	11.5	4588859
	CHPF4860D6D*	G*V950905DXA*	56,000	40,900	13.5	11.5	4588858

See Notes on Page 57.

AHRI RATINGS (CONT.)

OUTDOOR UNIT	INDOOR UNITS		COOLING CAPACITY (BTU/H)				AHRI #
	COILS & AIR HANDLERS	FURNACES/BLOWERS	TOTAL	SENSIBLE	SEER[1]	EER[2]	
SSX14 0601A* (cont.)	CHPF4860D6D*	G*VC950915DXA*	56,000	40,900	13.5	11.5	4201936
	CHPF4860D6D*	A*VC950915DXA*	56,000	40,900	13.5	11.5	4201935
	CHPF4860D6D*	A*VC950905CXA*	56,000	40,900	13.5	11.5	4201364
	CHPF4860D6D*	G*VC950905CXA*	56,000	40,900	13.5	11.5	4201363
	CHPF4860D6D*	A*VC951155DXA*	56,000	40,900	13.5	11.5	3607317
	CHPF4860D6D*	A*VC950905DXA*	56,000	40,900	13.5	11.5	3607313
	CHPF4860D6D*	A*VC90905DXA*	56,000	40,900	13.5	11.5	3607269
	CHPF4860D6D*	G*VC951155DXA*	56,000	40,900	13.5	11.5	3598956
	CHPF4860D6D*	G*VC950905DXA*	56,000	40,900	13.5	11.5	3598720
	CHPF4860D6D*	G*VC90905DXA*	56,000	40,900	13.5	11.5	4588857
	CHPF4860D6D*	G*V951155D**	56,000	40,900	13.5	11.5	3300079
	CHPF4860D6D*	G*V950905D**	56,000	40,900	13.5	11.5	3300078
	CHPF4860D6D*+EEP		56,000	40,900	14.0	12.0	3300080
	CHPF4860D6D*+EEP+TXV		56,000	40,900	14.5	12.0	3367401
	CHPF4860D6D*	MBR2000**-1	56,000	40,900	14.0	12.0	3300162
	CHPF4860D6D*	MBVC2000**-1A*	56,000	40,900	15.0	12.5	4559590
	CHPF4860D6D*+TXV	A*VC81155CXA*	57,000	41,600	14.5	12.3	4216696
	CHPF4860D6D*+TXV	G*VC81155CXA*	57,000	41,600	14.5	12.3	4216694
	CHPF4860D6D*+TXV	A*VC80905CXA*	57,000	41,600	14.5	12.3	4216691
	CHPF4860D6D*+TXV	G*VC80905CXA*	57,000	41,600	14.5	12.3	4216690
	CHTF4860D6A*+EEP		56,000	40,900	14.0	12.0	3493834
	CSCF4860N6C*	G*V951155DXA*	56,000	40,900	13.5	11.5	4588862
	CSCF4860N6C*	G*V950905DXA*	56,000	40,900	13.5	11.5	4588861
	CSCF4860N6C*	G*VC950915DXA*	56,000	40,900	13.5	11.5	4201938
	CSCF4860N6C*	A*VC950915DXA*	56,000	40,900	13.5	11.5	4201937
	CSCF4860N6C*	A*VC950905CXA*	56,000	40,900	13.5	11.5	4201366
	CSCF4860N6C*	G*VC950905CXA*	56,000	40,900	13.5	11.5	4201365
	CSCF4860N6C*	A*VC951155DXA*	56,000	40,900	13.5	11.5	3607318
	CSCF4860N6C*	A*VC950905DXA*	56,000	40,900	13.5	11.5	3607314
	CSCF4860N6C*	A*VC90905DXA*	56,000	40,900	13.5	11.5	3607262
	CSCF4860N6C*	G*VC951155DXA*	56,000	40,900	13.5	11.5	3598958
	CSCF4860N6C*	G*VC950905DXA*	56,000	40,900	13.5	11.5	3598722
	CSCF4860N6C*	G*VC90905DXA*	56,000	40,900	13.5	11.5	4588860
	CSCF4860N6C*	G*V951155D**	56,000	40,900	13.5	11.5	1296842
	CSCF4860N6C*	G*V950905D**	56,000	40,900	13.5	11.5	1296841
	CSCF4860N6C*+EEP		56,000	40,900	14.0	12.0	1296843
	CSCF4860N6C*	MBE2000**-1	56,000	40,900	15.0	12.0	1296698
	CSCF4860N6C*	MBE2000**-1B*	56,000	40,900	15.0	12.0	4588863
	CSCF4860N6C*	MBR2000**-1	56,000	40,900	14.0	12.0	1296699
	CSCF4860N6C*	MBVC2000**-1A*	56,000	40,900	15.0	12.0	3609487
	CT*F4860*6A*	A*VC950905CXA*	56,000	40,900	13.5	11.5	4201367
	CT*F4860*6A*	G*VC951155DXA*	56,000	40,900	13.5	11.5	3598959
	CT*F4860*6A*	G*VC90905DXA*	56,000	40,900	13.5	11.5	3597885
	CT*F4860*6A*	G*V951155D**	56,000	40,900	13.5	11.5	1449916
	CT*F4860*6A*	G*V90905D**	56,000	40,900	13.5	11.5	1449915
	CT*F4860*6A*+EEP		56,000	40,900	14.0	12.0	1487084
	CT*F4860*6A*	MBE2000**-1	56,000	40,900	15.0	12.5	1449917
	CT*F4860*6A*	MBR2000**-1	56,000	40,900	14.0	12.0	1449918
	CT*F4860*6A*	MBVC2000**-1A*	56,000	40,900	15.0	12.5	3609488

[1] Seasonal Energy Efficiency Ratio; Certified per AHRI 210/240 @ 80°F/ 67°F/ 95°F [2] Energy Efficiency Ratio @ 80 °F/67 °F Inside - 95 °F

NOTES

- Always check the S&R plate for electrical data on the unit being installed.
- When matching the outdoor unit to the indoor unit, use the piston supplied with the outdoor unit or what is specified on the piston kit chart supplied with the indoor unit.
- EEP - Order from Service Dept. Part No. B13707-38 or new Solid State Board B13707-35S. Part No. B13707-38 is not interchangeable with B13707-35S. The Goodman Gas Furnace contains the EEP cooling time delay.

Dimensions

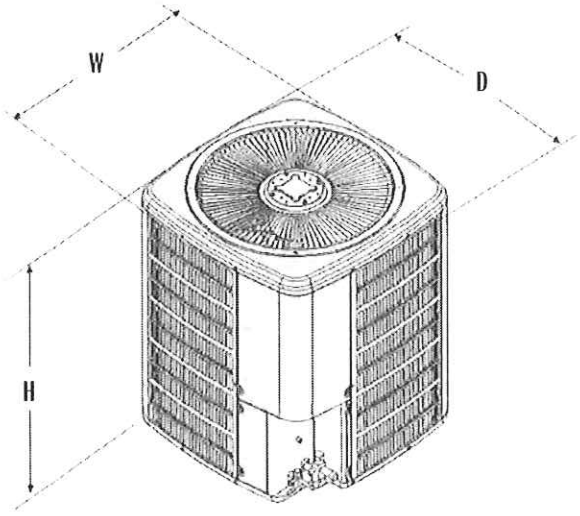

Model	Dimensions		
	W"	D"	H"
SSX140181A	26	26	32¼
SSX140181B	26	26	27½
SSX140241A	26	26	32¼
SSX140241B	26	26	32½
SSX140301A	29	29	32¼
SSX140301B	29	29	32½
SSX140361A	29	29	34¼
SSX140361B	29	29	32½
SSX140421B	29	29	38¼
SSX140421C	29	29	36¼
SSX140481A	35½	35½	38¼
SSX140481B	35½	35½	36¼
SSX140601A	35½	35½	38¼

SSX14 WIRING DIAGRAM

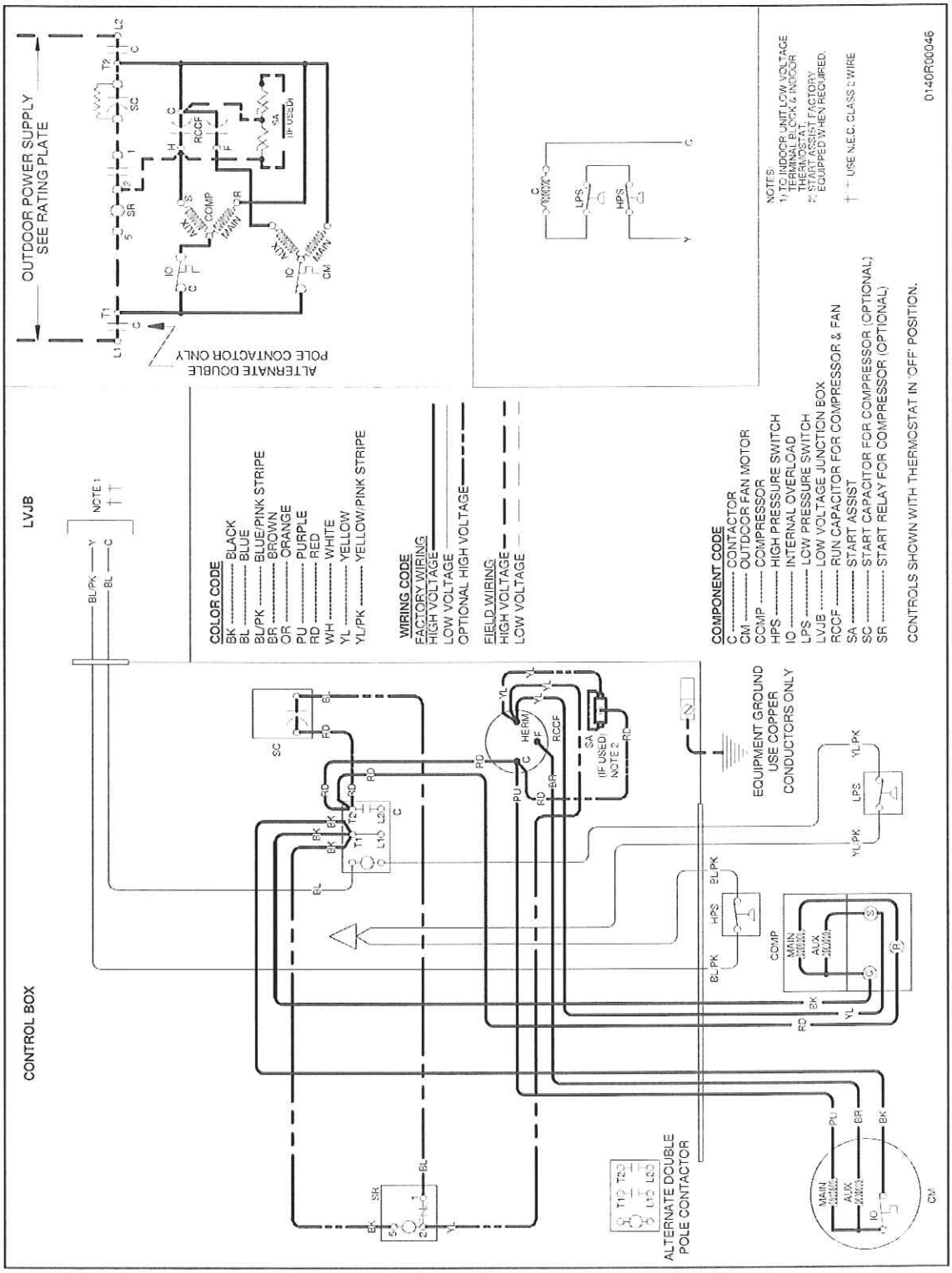

WARNING

High Voltage: Disconnect all power before servicing or installing this unit. Multiple power sources may be present. Failure to do so may cause property damage, personal injury, or death.

Wiring is subject to change. Always refer to the wiring diagram or the unit for the most up-to-date wiring.

ACCESSORIES

MODEL	DESCRIPTION	SSX14 018	SSX14 024	SSX14 030	SSX14 036	SSX14 042	SSX14 048	SSX14 060
ABK-20	Anchor Bracket Kit *	X	X	X	X	X	X	X
ASC-01	Anti-Short Cycle Kit	X	X	X	X	X	X	X
CSR-U-1	Hard-start Kit	X	X	X	X			
CSR-U-2	Hard-start Kit				X	X	X	X
CSR-U-3	Hard-start Kit						X	X
FSK01A[1]	Freeze Protection Kit	X	X	X	X	X	X	X
LSK01A	Liquid Line Solenoid Kit	X	X	X	X	X	X	X
OT18-60A	Outdoor Thermostat / Lockout Stat	X	X	X	X	X	X	X
TX2N4[2]	TXV Kit	X						
TX2N4A[2]	TXV Kit	X	X					
TX3N4[2]	TXV Kit			X	X			
TX5N4[2]	TXV Kit					X	X	X

* Contains 20 brackets; four brackets needed to anchor unit to pad

[1] Installed on indoor coil

[2] Field-installed, non-bleed, expansion valve kit — Condensing units and heat pumps with reciprocating compressors require start-assist components when used in conjunction with an indoor coil using a non-bleed thermal expansion valve refrigerant metering device. The TXV should always be sized based on the tonnage of the outdoor unit.

THIS CHECK IS PRINTED ON CHEMICAL REACTIVE PAPER WHICH CONTAINS A WATERMARK - VERIFY FOR AUTHENTICITY

City NATIONAL BANK

NOTICE TO CUSTOMERS: THE PURCHASE OF AN INDEMINITY BOND WILL BE REQUIRED BEFORE ANY OFFICIAL CHECK OF THIS BANK WILL BE REPLACED OR REFUNDED IN THE EVENT IT IS LOST MISPLACED OR STOLEN. ANY QUESTIONS PLEASE CALL (304) 769-1320.

CASHIERS CHECK

10234718

Date: 8/23/11

Branch: 0002

REMITTER MOUNTAIN AIR SHEET METAL

PAY TO THE ORDER OF EXACTLY **3,000 AND 00/100 DOLLARS $3,000.00

STATE OF WEST VIRGINIA

Terry W. Childers

[redacted]