West Virginia
Purchasing Division
2019 Washington Street, East
Charleston, WV 25305
Telephone: 304-558-2306
General Fax: 304-558-6026
Bid Fax: 304-558-3970

The following documentation is an electronically-submitted vendor response to an advertised solicitation from the *West Virginia Purchasing Bulletin* within the Vendor Self-Service portal at ***wvOASIS.gov***. As part of the State of West Virginia's procurement process, and to maintain the transparency of the bid-opening process, this documentation submitted online is publicly posted by the West Virginia Purchasing Division at ***WVPurchasing.gov*** with any other vendor responses to this solicitation submitted to the Purchasing Division in hard copy format.

WVOASIS

Jump to: PRCUID Go | Home | Personalize | Accessibility | App Help | About

Welcome, Alisha S Pettit

Procurement | Budgeting | Accounts Receivable | Accounts Payable

Solicitation Response(SR) **Dept:** 0603 **ID:** ESR05232400000007312 **Ver.:** 1 **Function:** New **Phase:** Final

Modified by batch , 05/23/2024

Header 1

List View

General Information | Contact | Default Values | Discount | Document Information | Clarification Request

Procurement Folder: 1425026

Procurement Type: Central Purchase Order

Vendor ID: 000000193013

Legal Name: HARBEL INC

Alias/DBA:

Total Bid: $69,800.00

Response Date: 05/23/2024

Response Time: 13:06

Responded By User ID: Harbel74

First Name: Jennifer

Last Name: Wilson

Email: jwilson@thebeltgroup.com

Phone: 301-729-8303

SO Doc Code: CRFQ

SO Dept: 0603

SO Doc ID: ADJ2400000017

Published Date: 5/23/24

Close Date: 5/23/24

Close Time: 13:30

Status: Closed

Solicitation Description: Camp Dawson Chalet Deck Replacement Construction

Total of Header Attachments: 1

Total of All Attachments: 1

Department of Administration **Purchasing Division** **2019 Washington Street East** **Post Office Box 50130** **Charleston, WV 25305-0130**	**State of West Virginia** **Solicitation Response**

Proc Folder:	1425026
Solicitation Description:	Camp Dawson Chalet Deck Replacement Construction
Proc Type:	Central Purchase Order

Solicitation Closes	Solicitation Response	Version
2024-05-23 13:30	SR 0603 ESR05232400000007312	1

VENDOR
000000193013 HARBEL INC

Solicitation Number: CRFQ 0603 ADJ2400000017

Total Bid: 69800 **Response Date:** 2024-05-23 **Response Time:** 13:06:04

Comments:

FOR INFORMATION CONTACT THE BUYER
David H Pauline
304-558-0067
david.h.pauline@wv.gov

Vendor
Signature X **FEIN#** **DATE**

All offers subject to all terms and conditions contained in this solicitation

Line	Comm Ln Desc	Qty	Unit Issue	Unit Price	Ln Total Or Contract Amount
1	BASE BID- Camp Dawson Chalet Deck Replacement Construction				69800.00

Comm Code	Manufacturer	Specification	Model #
72000000			

Commodity Line Comments:

Extended Description:

See Exhibit "A" Pricing Page/Bid Form to input pricing.
Contract Item #1- BASE BID- Labor & materials per the construction documents

Department of Administration Purchasing Division 2019 Washington Street East Post Office Box 50130 Charleston, WV 25305-0130	**State of West Virginia** **Centralized Request for Quote**

Proc Folder:	1425026		**Reason for Modification:**
Doc Description:	Camp Dawson Chalet Deck Replacement Construction		Addendum No. 1
Proc Type:	Central Purchase Order		
Date Issued	**Solicitation Closes**	**Solicitation No**	**Version**
2024-05-23	2024-05-23 13:30	CRFQ 0603 ADJ2400000017	2

BID RECEIVING LOCATION

BID CLERK
DEPARTMENT OF ADMINISTRATION
PURCHASING DIVISION
2019 WASHINGTON ST E
CHARLESTON WV 25305
US

VENDOR

Vendor Customer Code:

Vendor Name : Harbel, Inc.

Address : P.O. Box 358

Street : 11521 Milnor Avenue

City : Cumberland

State : Maryland **Country :** USA **Zip :** 21501-0358

Principal Contact : David J. Madden, President

Vendor Contact Phone: 301-729-8303 **Extension:**

FOR INFORMATION CONTACT THE BUYER
David H Pauline
304-558-0067
david.h.pauline@wv.gov

Vendor Signature X Jared Burkett Vice President **FEIN#** 52-1005317 **DATE** 5/23/2024

All offers subject to all terms and conditions contained in this solicitation

ADDITIONAL INFORMATION

Addendum No. 1

To publish the Mandatory Pre-bid Sign-in sheets, see attached.

Bid opening date and time remains May 23, 2024, at 1:30 pm., est.

No other changes.

INVOICE TO		SHIP TO	
ADJUTANT GENERALS OFFICE		CAMP DAWSON ARMY TRAINING SITE	
1707 COONSKIN DR		240 ARMY RD	
CHARLESTON	WV	KINGWOOD	WV
US		US	

Line	Comm Ln Desc	Qty	Unit Issue	Unit Price	Total Price
1	BASE BID- Camp Dawson Chalet Deck Replacement Construction				

Comm Code	Manufacturer	Specification	Model #
72000000			

Extended Description:
See Exhibit "A" Pricing Page/Bid Form to input pricing.

Contract Item #1- BASE BID- Labor & materials per the construction documents

SCHEDULE OF EVENTS

Line	Event	Event Date
1	Mandatory Pre-bid Meeting at 10:30 am., est.	2024-05-16
2	Vendor Technical Questions Due By Noon est.,	2024-05-20

SOLICITATION NUMBER: CRFQ ADJ2400000017
Addendum Number: 1

The purpose of this addendum is to modify the solicitation identified as ("ADJ2400000017") to reflect the change(s) identified and described below.

Applicable Addendum Category:

☐ Modify bid opening date and time.

☐ Modify specifications of product or service being sought.

☐ Attachment of vendor questions and responses.

☒ Attachment of pre-bid sign-in sheet.

☐ Correction of error.

☐ Other.

Description of Modification to Solicitation:

1. To provide copies of the pre-bid meeting sign-in sheets, see attached.
2. Bid opening date and time remains May 23, 2024, at 1:30pm., est.
3. No other changes.

Additional Documentation: Documentation related to this Addendum (if any) has been included herewith as Attachment A and is specifically incorporated herein by reference.

Terms and Conditions:

1. All provisions of the Solicitation and other addenda not modified herein shall remain in full force and effect.

2. Vendor should acknowledge receipt of all addenda issued for this Solicitation by completing an Addendum Acknowledgment, a copy of which is included herewith. Failure to acknowledge addenda may result in bid disqualification. The addendum acknowledgement should be submitted with the bid to expedite document processing.

Pre-Bid Sign-In Sheet

Solicitation Number: ADJ2400000017
Date of Pre-Bid Meeting: May 16th, 2024 @10:30am
Location of Prebid Meeting: Camp Dawson,Kingwood, WV

Please Note:
Vendors must sign-in on this sheet to verify attendance at the Pre-Bid meeting.
Failure to legibly sign in may be grounds for declaring a vendor ineligible to bid.
For further verification, please also provide a business card if possible.

Firm Represented:*	Rep Name (Printed):	Firm Address:	Telephone #:	Fax #:	Email:
WVARNG	Jonathan Neal	1001 Army Road Kingwood, WV 26537	304-791-4138		Jonathan.L.Neal.nfg @army.mil
WVARNG	Robert Grimm	1001 Army Road Kingwood, WV 26537	304-791-4959		robert.c.grimm11.nfg @army.mil
WVARNG	Phillip Cantrell	1001 Army Road Kingwood, WV 26537	304-791-4089		phillip.j.cantrell2.nfg @army.mil
B n A	Joe Williams	Albright, WV	304 698 6685	—	bobayersman@yahoo.com
The Dirt Doctor	Charles Lewis	6341 Talbott Belington, WV 26250	304-918 8085		clewis@thedirtdoctor.com
Caliber Contracting Services	Derek Hinkle	104 East Swissvale Ave. Pittsburgh, PA 15218	412-699-3669	412-205-8078	jdonahoe@caliber contractingservices.com

***One Vendor Per Representative** - *No one individual is permitted to represent more than one vendor at the pre-bid meeting. Any individual that does attempt to represent two or more vendors will be required to select one vendor to which the individual's attendance will be attributed. The vendors not selected will be deemed to have not attended the pre-bid meeting unless another individual attended on their behalf.*

Pre-Bid Sign-In Sheet

Solicitation Number: ADJ2400000017
Date of Pre-Bid Meeting: May 16th, 2024 @10:30am
Location of Prebid Meeting: Camp Dawson,Kingwood, WV

Please Note:
Vendors must sign-in on this sheet to verify attendance at the Pre-Bid meeting.
Failure to legibly sign in may be grounds for declaring a vendor ineligible to bid.
For further verification, please also provide a business card if possible.

Firm Represented:*	Rep Name (Printed):	Firm Address:	Telephone #:	Fax #:	Email:
Meadows Ent	Manoah Meadows	599 Bleedon Road Cool Ridge WV 25825	304-890-6064		MMeadows2110@gmail.com
Veritas	Steve Spiker	246 Business Park Dr Fairmont WV 26554	304-598-2285		bid@veritasnw.com
Dan Hill Const. Co	Dan Hill	P.O. Box 685 Gauley Bridge WV 25085	304-663 5761		danhill@danhillconstruction.com
RAA Contracting	Robby Ayersman	2682 Campground Rd Tunnelton WV 26444	304-698 6660		RobbyAyersman85@gmail.com
Harbel Inc. Construction	Keith Taylor	PO Box 358 Cumberland MD 21501	301 729 8303		jwilson@thedeltagroup.com

***One Vendor Per Representative** - No one individual is permitted to represent more than one vendor at the pre-bid meeting. Any individual that does attempt to represent two or more vendors will be required to select one vendor to which the individual's attendance will be attributed. The vendors not selected will be deemed to have not attended the pre-bid meeting unless another individual attended on their behalf.*

ADDENDUM ACKNOWLEDGEMENT FORM
SOLICITATION NO.: CRFQ ADJ2400000017

Instructions: Please acknowledge receipt of all addenda issued with this solicitation by completing this addendum acknowledgment form. Check the box next to each addendum received and sign below. Failure to acknowledge addenda may result in bid disqualification.

Acknowledgment: I hereby acknowledge receipt of the following addenda and have made the necessary revisions to my proposal, plans and/or specification, etc.

Addendum Numbers Received:
(Check the box next to each addendum received)

☒	Addendum No. 1	☐	Addendum No. 6
☐	Addendum No. 2	☐	Addendum No. 7
☐	Addendum No. 3	☐	Addendum No. 8
☐	Addendum No. 4	☐	Addendum No. 9
☐	Addendum No. 5	☐	Addendum No. 10

I understand that failure to confirm the receipt of addenda may be cause for rejection of this bid. I further understand that that any verbal representation made or assumed to be made during any oral discussion held between Vendor's representatives and any state personnel is not binding. Only the information issued in writing and added to the specifications by an official addendum is binding.

Harbel, Inc.
Company

Jared Burkett
Vice President
Authorized Signature

5/23/2024
Date

NOTE: This addendum acknowledgement should be submitted with the bid to expedite document processing.

Department of Administration
Purchasing Division
2019 Washington Street East
Post Office Box 50130
Charleston, WV 25305-0130

State of West Virginia
Centralized Request for Quote

Proc Folder: 1425026			**Reason for Modification:**
Doc Description: Camp Dawson Chalet Deck Replacement Construction			
Proc Type: Central Purchase Order			
Date Issued	**Solicitation Closes**	**Solicitation No**	**Version**
2024-05-02	2024-05-23 13:30	CRFQ 0603 ADJ2400000017	1

BID RECEIVING LOCATION

BID CLERK
DEPARTMENT OF ADMINISTRATION
PURCHASING DIVISION
2019 WASHINGTON ST E
CHARLESTON WV 25305
US

VENDOR

Vendor Customer Code:

Vendor Name : **Harbel, Inc.**

Address : **P.O. Box 358**

Street : **11521 Milnor Avenue**

City : **Cumberland**

State : **Maryland** **Country :** **USA** **Zip :** **21501-0358**

Principal Contact : **David J. Madden, President**

Vendor Contact Phone: **301-729-8303** **Extension:**

FOR INFORMATION CONTACT THE BUYER
David H Pauline
304-558-0067
david.h.pauline@wv.gov

Vendor Signature X Jared Burkett Vice President **FEIN#** 52-1005317 **DATE** 5/23/2024

All offers subject to all terms and conditions contained in this solicitation

ADDITIONAL INFORMATION

Construction:
Camp Dawson Chalet Deck Replacement

The West Virginia Purchasing Division is soliciting bids on behalf of the Adjutant General's Office, Division of Engineering and Facilities to establish a contract to provide all labor, material, tools, equipment, supplies and supervision necessary to complete replacement construction of new decks on 3 Chalets, at the Camp Dawson Army Training Site, near Kingwood, WV, per the attached specifications.

****

Mandatory Pre-bid Meeting:

Camp Dawson Training Site- Building 301
240 Army Road, Kingwood, WV 26537
May 16, 2024 at 10:30am

****

\

INVOICE TO		SHIP TO	
ADJUTANT GENERALS OFFICE		CAMP DAWSON ARMY TRAINING SITE	
1707 COONSKIN DR		240 ARMY RD	
CHARLESTON	WV	KINGWOOD	WV
US		US	

Line	Comm Ln Desc	Qty	Unit Issue	Unit Price	Total Price
1	BASE BID- Camp Dawson Chalet Deck Replacement Construction				

Comm Code	Manufacturer	Specification	Model #
72000000			

Extended Description:
See Exhibit "A" Pricing Page/Bid Form to input pricing.

Contract Item #1- BASE BID- Labor & materials per the construction documents

SCHEDULE OF EVENTS

Line	Event	Event Date
1	Mandatory Pre-bid Meeting at 10:30 am., est.	2024-05-16
2	Vendor Technical Questions Due By Noon est.,	2024-05-20

INSTRUCTIONS TO VENDORS SUBMITTING BIDS

1. REVIEW DOCUMENTS THOROUGHLY: The attached documents contain a solicitation for bids. Please read these instructions and all documents attached in their entirety. These instructions provide critical information about requirements that if overlooked could lead to disqualification of a Vendor's bid. All bids must be submitted in accordance with the provisions contained in these instructions and the Solicitation. Failure to do so may result in disqualification of Vendor's bid.

2. MANDATORY TERMS: The Solicitation may contain mandatory provisions identified by the use of the words "must," "will," and "shall." Failure to comply with a mandatory term in the Solicitation will result in bid disqualification.

3. PREBID MEETING: The item identified below shall apply to this Solicitation.

☑ A pre-bid meeting will not be held prior to bid opening

☑ A **MANDATORY PRE-BID** meeting will be held at the following place and time:

Camp Dawson Training Site- Building 301
240 Army Road, Kingwood, WV 26537
May 16, 2024 at 10:30am
See General Construction Specifications for additional information regarding site visits.

All Vendors submitting a bid must attend the mandatory pre-bid meeting. Failure to attend the mandatory pre-bid meeting shall result in disqualification of the Vendor's bid. No one individual is permitted to represent more than one vendor at the pre-bid meeting. Any individual that does attempt to represent two or more vendors will be required to select one vendor to which the individual's attendance will be attributed. The vendors not selected will be deemed to have not attended the pre-bid meeting unless another individual attended on their behalf.

An attendance sheet provided at the pre-bid meeting shall serve as the official document verifying attendance. Any person attending the pre-bid meeting on behalf of a Vendor must list on the attendance sheet his or her name and the name of the Vendor he or she is representing.

Additionally, the person attending the pre-bid meeting should include the Vendor's E-Mail address, phone number, and Fax number on the attendance sheet. It is the Vendor's responsibility to locate the attendance sheet and provide the required information. Failure to complete the attendance sheet as required may result in disqualification of Vendor's bid.

All Vendors should arrive prior to the starting time for the pre-bid. Vendors who arrive after the starting time but prior to the end of the pre-bid will be permitted to sign in but are charged with knowing all matters discussed at the pre-bid.

Questions submitted at least five business days prior to a scheduled pre-bid will be discussed at the pre-bid meeting if possible. Any discussions or answers to questions at the pre-bid meeting are preliminary in nature and are non-binding. Official and binding answers to questions will be published in a written addendum to the Solicitation prior to bid opening.

4. VENDOR QUESTION DEADLINE: Vendors may submit questions relating to this Solicitation to the Purchasing Division. Questions must be submitted in writing. All questions must be submitted on or before the date listed below and to the address listed below to be considered. A written response will be published in a Solicitation addendum if a response is possible and appropriate. Non-written discussions, conversations, or questions and answers regarding this Solicitation are preliminary in nature and are nonbinding.

Submitted emails should have the solicitation number in the subject line.

Question Submission Deadline: May 20, 2024, at Noon est.

Submit Questions to: David Pauline, Senior Buyer
2019 Washington Street, East
Charleston, WV 25305
Fax: (304) 558-3970
Email: David.H.Pauline@wv.gov

5. VERBAL COMMUNICATION: Any verbal communication between the Vendor and any State personnel is not binding, including verbal communication at the mandatory pre-bid conference. Only information issued in writing and added to the Solicitation by an official written addendum by the Purchasing Division is binding.

6. BID SUBMISSION: All bids must be submitted on or before the date and time of the bid opening listed in section 7 below. Vendors can submit bids electronically through *wv*OASIS, in paper form delivered to the Purchasing Division at the address listed below either in person or by courier, or in facsimile form by faxing to the Purchasing Division at the number listed below. Notwithstanding the foregoing, the Purchasing Division may prohibit the submission of bids electronically through *wv*OASIS at its sole discretion. Such a prohibition will be contained and communicated in the *wv*OASIS system resulting in the Vendor's inability to submit bids through *wv*OASIS. The Purchasing Division will not accept bids, modification of bids, or addendum acknowledgment forms via email. Bids submitted in paper or facsimile form must contain a signature. Bids submitted in *wv*OASIS are deemed to be electronically signed.

Any bid received by the Purchasing Division staff is considered to be in the possession of the Purchasing Division and will not be returned for any reason.

For Request for Proposal ("RFP") Responses Only: Submission of a response to a Request for Proposal is not permitted in *wv*OASIS. In the event that Vendor is responding to a request for proposal, the Vendor shall submit one original technical and one original cost proposal prior to the bid opening date and time identified in Section 7 below, plus N/A convenience copies of each to the Purchasing Division at the address shown below. Additionally, the Vendor should clearly identify and segregate the cost proposal from the technical proposal in a separately sealed envelope.

Bid Delivery Address and Fax Number:
Department of Administration, Purchasing Division
2019 Washington Street East
Charleston, WV 25305-0130
Fax: 304-558-3970

A bid submitted in paper or facsimile form should contain the information listed below on the face of the submission envelope or fax cover sheet. Otherwise, the bid may be rejected by the Purchasing Division.

VENDOR NAME:
BUYER:
SOLICITATION NO.:
BID OPENING DATE:
BID OPENING TIME:
FAX NUMBER:

7. BID OPENING: Bids submitted in response to this Solicitation will be opened at the location identified below on the date and time listed below. Delivery of a bid after the bid opening date and time will result in bid disqualification. For purposes of this Solicitation, a bid is considered delivered when confirmation of delivery is provided by *wv*OASIS (in the case of electronic submission) or when the bid is time stamped by the official Purchasing Division time clock (in the case of hand delivery).

Bid Opening Date and Time: May 23, 2024, at 1:30 pm., est.

Bid Opening Location: Department of Administration, Purchasing Division
2019 Washington Street East
Charleston, WV 25305-0130

8. ADDENDUM ACKNOWLEDGEMENT: Changes or revisions to this Solicitation will be made by an official written addendum issued by the Purchasing Division. Vendor should acknowledge receipt of all addenda issued with this Solicitation by completing an Addendum Acknowledgment Form, a copy of which is included herewith. Failure to acknowledge addenda may result in bid disqualification. The addendum acknowledgement should be submitted with the bid to expedite document processing.

9. BID FORMATTING: Vendor should type or electronically enter the information onto its bid to prevent errors in the evaluation. Failure to type or electronically enter the information may result in bid disqualification.

10. ALTERNATE MODEL OR BRAND: Unless the box below is checked, any model, brand, or specification listed in this Solicitation establishes the acceptable level of quality only and is not intended to reflect a preference for, or in any way favor, a particular brand or vendor. Vendors may bid alternates to a listed model or brand provided that the alternate is at least equal to the model or brand and complies with the required specifications. The equality of any alternate being bid shall be determined by the State at its sole discretion. Any Vendor bidding an alternate model or brand should clearly identify the alternate items in its bid and should include manufacturer's specifications, industry literature, and/or any other relevant documentation demonstrating the equality of the alternate items. Failure to provide information for alternate items may be grounds for rejection of a Vendor's bid.

☐ This Solicitation is based upon a standardized commodity established under W. Va. Code § 5A-3-61. Vendors are expected to bid the standardized commodity identified. Failure to bid the standardized commodity will result in your firm's bid being rejected.

11. EXCEPTIONS AND CLARIFICATIONS: The Solicitation contains the specifications that shall form the basis of a contractual agreement. Vendor shall clearly mark any exceptions, clarifications, or other proposed modifications in its bid. Exceptions to, clarifications of, or modifications of a requirement or term and condition of the Solicitation may result in bid disqualification.

12. COMMUNICATION LIMITATIONS: In accordance with West Virginia Code of State Rules §148-1-6.6, communication with the State of West Virginia or any of its employees regarding this Solicitation during the solicitation, bid, evaluation or award periods, except through the Purchasing Division, is strictly prohibited without prior Purchasing Division approval. Purchasing Division approval for such communication is implied for all agency delegated and exempt purchases.

13. REGISTRATION: Prior to Contract award, the apparent successful Vendor must be properly registered with the West Virginia Purchasing Division and must have paid the $125 fee, if applicable.

14. UNIT PRICE: Unit prices shall prevail in cases of a discrepancy in the Vendor's bid.

15. PREFERENCE: Vendor Preference may be requested in purchases of motor vehicles or construction and maintenance equipment and machinery used in highway and other infrastructure projects. Any request for preference must be submitted in writing with the bid, must specifically identify the preference requested with reference to the applicable subsection of West Virginia Code § 5A-3-37, and must include with the bid any information necessary to evaluate and confirm the applicability of the requested preference. A request form to help facilitate the request can be found at: www.state.wv.us/admin/purchase/vrc/Venpref.pdf.

15A. RECIPROCAL PREFERENCE: The State of West Virginia applies a reciprocal preference to all solicitations for commodities and printing in accordance with W. Va. Code § 5A-3-37(b). In effect, non-resident vendors receiving a preference in their home states, will see that same preference granted to West Virginia resident vendors bidding against them in West Virginia. Any request for reciprocal preference must include with the bid any information necessary to evaluate and confirm the applicability of the preference. A request form to help facilitate the request can be found at: www.state.wv.us/admin/purchase/vrc/Venpref.pdf.

16. SMALL, WOMEN-OWNED, OR MINORITY-OWNED BUSINESSES: For any solicitations publicly advertised for bid, in accordance with West Virginia Code §5A-3-37 and W. Va. CSR § 148-22-9, any non-resident vendor certified as a small, women- owned, or minority-owned business under W. Va. CSR § 148-22-9 shall be provided the same preference made available to any resident vendor. Any non-resident small, women-owned, or minority-owned business must identify itself as such in writing, must submit that writing to the Purchasing Division with its bid, and must be properly certified under W. Va. CSR § 148-22-9 prior to contract award to receive the preferences made available to resident vendors. Preference for a non-resident small, women-owned, or minority owned business shall be applied in accordance with W. Va. CSR § 148-22-9.

17. WAIVER OF MINOR IRREGULARITIES: The Director reserves the right to waive minor irregularities in bids or specifications in accordance with West Virginia Code of State Rules § 148-1-4.6.

18. ELECTRONIC FILE ACCESS RESTRICTIONS: Vendor must ensure that its submission in *wv*OASIS can be accessed and viewed by the Purchasing Division staff immediately upon bid opening. The Purchasing Division will consider any file that cannot be immediately accessed and viewed at the time of the bid opening (such as, encrypted files, password protected files, or incompatible files) to be blank or incomplete as context requires and are therefore unacceptable. A vendor will not be permitted to unencrypt files, remove password protections, or resubmit documents after bid opening to make a file viewable if those documents are required with the bid. A Vendor may be required to provide document passwords or remove access restrictions to allow the Purchasing Division to print or electronically save documents provided that those documents are viewable by the Purchasing Division prior to obtaining the password or removing the access restriction.

19. NON-RESPONSIBLE: The Purchasing Division Director reserves the right to reject the bid of any vendor as Non-Responsible in accordance with W. Va. Code of State Rules § 148-1-5.3, when the Director determines that the vendor submitting the bid does not have the capability to fully perform or lacks the integrity and reliability to assure good-faith performance."

20. ACCEPTANCE/REJECTION: The State may accept or reject any bid in whole, or in part in accordance with W. Va. Code of State Rules § 148-1-4.5. and § 148-1-6.4.b."

21. YOUR SUBMISSION IS A PUBLIC DOCUMENT: Vendor's entire response to the Solicitation and the resulting Contract are public documents. As public documents, they will be disclosed to the public following the bid/proposal opening or award of the contract, as required by the competitive bidding laws of West Virginia Code §§ 5A-3-1 et seq., 5-22-1 et seq., and 5G-1-1 et seq. and the Freedom of Information Act West Virginia Code §§ 29B-1-1 et seq.

DO NOT SUBMIT MATERIAL YOU CONSIDER TO BE CONFIDENTIAL, A TRADE SECRET, OR OTHERWISE NOT SUBJECT TO PUBLIC DISCLOSURE.

Submission of any bid, proposal, or other document to the Purchasing Division constitutes your explicit consent to the subsequent public disclosure of the bid, proposal, or document. The Purchasing Division will disclose any document labeled "confidential," "proprietary," "trade secret," "private," or labeled with any other claim against public disclosure of the documents, to include any "trade secrets" as defined by West Virginia Code § 47-22-1 et seq. All submissions are subject to public disclosure without notice.

22. WITH THE BID REQUIREMENTS: In instances where these specifications require documentation or other information with the bid, and a vendor fails to provide it with the bid, the Director of the Purchasing Division reserves the right to request those items after bid opening and prior to contract award pursuant to the authority to waive minor irregularities in bids or specifications under W. Va. CSR § 148-1-4.6. This authority does not apply to instances where state law mandates receipt with the bid.

23. EMAIL NOTIFICATION OF AWARD: The Purchasing Division will attempt to provide bidders with e-mail notification of contract award when a solicitation that the bidder participated in has been awarded. For notification purposes, bidders must provide the Purchasing Division with a valid email address in the bid response. Bidders may also monitor *wv*OASIS or the Purchasing Division's website to determine when a contract has been awarded.

24. ISRAEL BOYCOTT CERTIFICATION: Vendor's act of submitting a bid in response to this solicitation shall be deemed a certification from bidder to the State that bidder is not currently engaged in, and will not for the duration of the contract, engage in a boycott of Israel. This certification is required by W. Va. Code § 5A-3-63.

GENERAL TERMS AND CONDITIONS:

1. CONTRACTUAL AGREEMENT: Issuance of an Award Document signed by the Purchasing Division Director, or his designee, and approved as to form by the Attorney General's office constitutes acceptance by the State of this Contract made by and between the State of West Virginia and the Vendor. Vendor's signature on its bid, or on the Contract if the Contract is not the result of a bid solicitation, signifies Vendor's agreement to be bound by and accept the terms and conditions contained in this Contract.

2. DEFINITIONS: As used in this Solicitation/Contract, the following terms shall have the meanings attributed to them below. Additional definitions may be found in the specifications included with this Solicitation/Contract.

2.1. "Agency" or **"Agencies"** means the agency, board, commission, or other entity of the State of West Virginia that is identified on the first page of the Solicitation or any other public entity seeking to procure goods or services under this Contract.

2.2. "Bid" or **"Proposal"** means the vendors submitted response to this solicitation.

2.3. "Contract" means the binding agreement that is entered into between the State and the Vendor to provide the goods or services requested in the Solicitation.

2.4. "Director" means the Director of the West Virginia Department of Administration, Purchasing Division.

2.5. "Purchasing Division" means the West Virginia Department of Administration, Purchasing Division.

2.6. "Award Document" means the document signed by the Agency and the Purchasing Division, and approved as to form by the Attorney General, that identifies the Vendor as the contract holder.

2.7. "Solicitation" means the official notice of an opportunity to supply the State with goods or services that is published by the Purchasing Division.

2.8. "State" means the State of West Virginia and/or any of its agencies, commissions, boards, etc. as context requires.

2.9. "Vendor" or **"Vendors"** means any entity submitting a bid in response to the Solicitation, the entity that has been selected as the lowest responsible bidder, or the entity that has been awarded the Contract as context requires.

3. CONTRACT TERM; RENEWAL; EXTENSION: The term of this Contract shall be determined in accordance with the category that has been identified as applicable to this Contract below:

☐ **Term Contract**

Initial Contract Term: The Initial Contract Term will be for a period of _____ _____. The Initial Contract Term becomes effective on the effective start date listed on the first page of this Contract, identified as the State of West Virginia contract cover page containing the signatures of the Purchasing Division, Attorney General, and Encumbrance clerk (or another page identified as _____), and the Initial Contract Term ends on the effective end date also shown on the first page of this Contract.

Renewal Term: This Contract may be renewed upon the mutual written consent of the Agency, and the Vendor, with approval of the Purchasing Division and the Attorney General's office (Attorney General approval is as to form only). Any request for renewal should be delivered to the Agency and then submitted to the Purchasing Division thirty (30) days prior to the expiration date of the initial contract term or appropriate renewal term. A Contract renewal shall be in accordance with the terms and conditions of the original contract. Unless otherwise specified below, renewal of this Contract is limited to _____ successive one (1) year periods or multiple renewal periods of less than one year, provided that the multiple renewal periods do not exceed the total number of months available in all renewal years combined. Automatic renewal of this Contract is prohibited. Renewals must be approved by the Vendor, Agency, Purchasing Division and Attorney General's office (Attorney General approval is as to form only)

> ☐ **Alternate Renewal Term** – This contract may be renewed for _____ successive _____ year periods or shorter periods provided that they do not exceed the total number of months contained in all available renewals. Automatic renewal of this Contract is prohibited. Renewals must be approved by the Vendor, Agency, Purchasing Division and Attorney General's office (Attorney General approval is as to form only)

Delivery Order Limitations: In the event that this contract permits delivery orders, a delivery order may only be issued during the time this Contract is in effect. Any delivery order issued within one year of the expiration of this Contract shall be effective for one year from the date the delivery order is issued. No delivery order may be extended beyond one year after this Contract has expired.

☑ **Fixed Period Contract:** This Contract becomes effective upon Vendor's receipt of the notice to proceed and must be completed within Ninety (90) calendar days.

☐ **Fixed Period Contract with Renewals:** This Contract becomes effective upon Vendor's receipt of the notice to proceed and part of the Contract more fully described in the attached specifications must be completed within _____ days. Upon completion of the work covered by the preceding sentence, the vendor agrees that:

☐ the contract will continue for _____ years;

☐ the contract may be renewed for _____ successive _____ year periods or shorter periods provided that they do not exceed the total number of months contained in all available renewals. Automatic renewal of this Contract is prohibited. Renewals must be approved by the Vendor, Agency, Purchasing Division and Attorney General's Office (Attorney General approval is as to form only).

☐ **One-Time Purchase:** The term of this Contract shall run from the issuance of the Award Document until all of the goods contracted for have been delivered, but in no event will this Contract extend for more than one fiscal year.

☐ **Construction/Project Oversight:** This Contract becomes effective on the effective start date listed on the first page of this Contract, identified as the State of West Virginia contract cover page containing the signatures of the Purchasing Division, Attorney General, and Encumbrance clerk (or another page identified as _____), and continues until the project for which the vendor is providing oversight is complete.

☐ **Other:** Contract Term specified in _____

4. AUTHORITY TO PROCEED: Vendor is authorized to begin performance of this contract on the date of encumbrance listed on the front page of the Award Document unless either the box for "Fixed Period Contract" or "Fixed Period Contract with Renewals" has been checked in Section 3 above. If either "Fixed Period Contract" or "Fixed Period Contract with Renewals" has been checked, Vendor must not begin work until it receives a separate notice to proceed from the State. The notice to proceed will then be incorporated into the Contract via change order to memorialize the official date that work commenced.

5. QUANTITIES: The quantities required under this Contract shall be determined in accordance with the category that has been identified as applicable to this Contract below.

☐ **Open End Contract:** Quantities listed in this Solicitation/Award Document are approximations only, based on estimates supplied by the Agency. It is understood and agreed that the Contract shall cover the quantities actually ordered for delivery during the term of the Contract, whether more or less than the quantities shown.

☐ **Service:** The scope of the service to be provided will be more clearly defined in the specifications included herewith.

☑ **Combined Service and Goods:** The scope of the service and deliverable goods to be provided will be more clearly defined in the specifications included herewith.

☐ **One-Time Purchase:** This Contract is for the purchase of a set quantity of goods that are identified in the specifications included herewith. Once those items have been delivered, no additional goods may be procured under this Contract without an appropriate change order approved by the Vendor, Agency, Purchasing Division, and Attorney General's office.

☑ **Construction:** This Contract is for construction activity more fully defined in the specifications.

6. EMERGENCY PURCHASES: The Purchasing Division Director may authorize the Agency to purchase goods or services in the open market that Vendor would otherwise provide under this Contract if those goods or services are for immediate or expedited delivery in an emergency. Emergencies shall include, but are not limited to, delays in transportation or an unanticipated increase in the volume of work. An emergency purchase in the open market, approved by the Purchasing Division Director, shall not constitute of breach of this Contract and shall not entitle the Vendor to any form of compensation or damages. This provision does not excuse the State from fulfilling its obligations under a One-Time Purchase contract.

7. REQUIRED DOCUMENTS: All of the items checked in this section must be provided to the Purchasing Division by the Vendor as specified:

☑ **LICENSE(S) / CERTIFICATIONS / PERMITS:** In addition to anything required under the Section of the General Terms and Conditions entitled Licensing, the apparent successful Vendor shall furnish proof of the following licenses, certifications, and/or permits upon request and in a form acceptable to the State. The request may be prior to or after contract award at the State's sole discretion.

☑ West Virginia Contractor's License

☐

☐

☐

The apparent successful Vendor shall also furnish proof of any additional licenses or certifications contained in the specifications regardless of whether or not that requirement is listed above.

8. INSURANCE: The apparent successful Vendor shall furnish proof of the insurance identified by a checkmark below prior to Contract award. The insurance coverages identified below must be maintained throughout the life of this contract. Thirty (30) days prior to the expiration of the insurance policies, Vendor shall provide the Agency with proof that the insurance mandated herein has been continued. Vendor must also provide Agency with immediate notice of any changes in its insurance policies, including but not limited to, policy cancelation, policy reduction, or change in insurers. The apparent successful Vendor shall also furnish proof of any additional insurance requirements contained in the specifications prior to Contract award regardless of whether that insurance requirement is listed in this section.

Vendor must maintain:

☑ **Commercial General Liability Insurance** in at least an amount of: $1,000,000.00 per occurrence.

☑ **Automobile Liability Insurance** in at least an amount of: $1,000,000.00 per occurrence.

☐ **Professional/Malpractice/Errors and Omission Insurance** in at least an amount of: _____ per occurrence. Notwithstanding the forgoing, Vendor's are not required to list the State as an additional insured for this type of policy.

☐ **Commercial Crime and Third Party Fidelity Insurance** in an amount of: _____ per occurrence.

☐ **Cyber Liability Insurance** in an amount of: _____ per occurrence.

☐ **Builders Risk Insurance** in an amount equal to 100% of the amount of the Contract.

☐ **Pollution Insurance** in an amount of: _____ per occurrence.

☐ **Aircraft Liability** in an amount of: _____ per occurrence.

☑ ***Please make Insurance Certificate Holder to Read***
West Virginia Army National Guard
1707 Coonskin Drive, Charleston, WV 25311

☐

☐

☐

9. WORKERS' COMPENSATION INSURANCE: Vendor shall comply with laws relating to workers compensation, shall maintain workers' compensation insurance when required, and shall furnish proof of workers' compensation insurance upon request.

10. VENUE: All legal actions for damages brought by Vendor against the State shall be brought in the West Virginia Claims Commission. Other causes of action must be brought in the West Virginia court authorized by statute to exercise jurisdiction over it.

11. LIQUIDATED DAMAGES: This clause shall in no way be considered exclusive and shall not limit the State or Agency's right to pursue any other available remedy. Vendor shall pay liquidated damages in the amount specified below or as described in the specifications:

☐ _____ for _____.

☑ Liquidated Damages Contained in the Specifications.

☐ Liquidated Damages Are Not Included in this Contract.

12. ACCEPTANCE: Vendor's signature on its bid, or on the certification and signature page, constitutes an offer to the State that cannot be unilaterally withdrawn, signifies that the product or service proposed by vendor meets the mandatory requirements contained in the Solicitation for that product or service, unless otherwise indicated, and signifies acceptance of the terms and conditions contained in the Solicitation unless otherwise indicated.

13. PRICING: The pricing set forth herein is firm for the life of the Contract, unless specified elsewhere within this Solicitation/Contract by the State. A Vendor's inclusion of price adjustment provisions in its bid, without an express authorization from the State in the Solicitation to do so, may result in bid disqualification. Notwithstanding the foregoing, Vendor must extend any publicly advertised sale price to the State and invoice at the lower of the contract price or the publicly advertised sale price.

14. PAYMENT IN ARREARS: Payments for goods/services will be made in arrears only upon receipt of a proper invoice, detailing the goods/services provided or receipt of the goods/services, whichever is later. Notwithstanding the foregoing, payments for software maintenance, licenses, or subscriptions may be paid annually in advance.

15. PAYMENT METHODS: Vendor must accept payment by electronic funds transfer and P-Card. (The State of West Virginia's Purchasing Card program, administered under contract by a banking institution, processes payment for goods and services through state designated credit cards.)

16. TAXES: The Vendor shall pay any applicable sales, use, personal property or any other taxes arising out of this Contract and the transactions contemplated thereby. The State of West Virginia is exempt from federal and state taxes and will not pay or reimburse such taxes.

17. ADDITIONAL FEES: Vendor is not permitted to charge additional fees or assess additional charges that were not either expressly provided for in the solicitation published by the State of West Virginia, included in the Contract, or included in the unit price or lump sum bid amount that Vendor is required by the solicitation to provide. Including such fees or charges as notes to the solicitation may result in rejection of vendor's bid. Requesting such fees or charges be paid after the contract has been awarded may result in cancellation of the contract.

18. FUNDING: This Contract shall continue for the term stated herein, contingent upon funds being appropriated by the Legislature or otherwise being made available. In the event funds are not appropriated or otherwise made available, this Contract becomes void and of no effect beginning on July 1 of the fiscal year for which funding has not been appropriated or otherwise made available. If that occurs, the State may notify the Vendor that an alternative source of funding has been obtained and thereby avoid the automatic termination. Non-appropriation or non-funding shall not be considered an event of default.

19. CANCELLATION: The Purchasing Division Director reserves the right to cancel this Contract immediately upon written notice to the vendor if the materials or workmanship supplied do not conform to the specifications contained in the Contract. The Purchasing Division Director may also cancel any purchase or Contract upon 30 days written notice to the Vendor in accordance with West Virginia Code of State Rules § 148-1-5.2.b.

20. TIME: Time is of the essence regarding all matters of time and performance in this Contract.

21. APPLICABLE LAW: This Contract is governed by and interpreted under West Virginia law without giving effect to its choice of law principles. Any information provided in specification manuals, or any other source, verbal or written, which contradicts or violates the West Virginia Constitution, West Virginia Code, or West Virginia Code of State Rules is void and of no effect.

22. COMPLIANCE WITH LAWS: Vendor shall comply with all applicable federal, state, and local laws, regulations and ordinances. By submitting a bid, Vendor acknowledges that it has reviewed, understands, and will comply with all applicable laws, regulations, and ordinances.

> **SUBCONTRACTOR COMPLIANCE:** Vendor shall notify all subcontractors providing commodities or services related to this Contract that as subcontractors, they too are required to comply with all applicable laws, regulations, and ordinances. Notification under this provision must occur prior to the performance of any work under the contract by the subcontractor.

23. ARBITRATION: Any references made to arbitration contained in this Contract, Vendor's bid, or in any American Institute of Architects documents pertaining to this Contract are hereby deleted, void, and of no effect.

24. MODIFICATIONS: This writing is the parties' final expression of intent. Notwithstanding anything contained in this Contract to the contrary no modification of this Contract shall be binding without mutual written consent of the Agency, and the Vendor, with approval of the Purchasing Division and the Attorney General's office (Attorney General approval is as to form only). Any change to existing contracts that adds work or changes contract cost, and were not included in the original contract, must be approved by the Purchasing Division and the Attorney General's Office (as to form) prior to the implementation of the change or commencement of work affected by the change.

25. WAIVER: The failure of either party to insist upon a strict performance of any of the terms or provision of this Contract, or to exercise any option, right, or remedy herein contained, shall not be construed as a waiver or a relinquishment for the future of such term, provision, option, right, or remedy, but the same shall continue in full force and effect. Any waiver must be expressly stated in writing and signed by the waiving party.

26. SUBSEQUENT FORMS: The terms and conditions contained in this Contract shall supersede any and all subsequent terms and conditions which may appear on any form documents submitted by Vendor to the Agency or Purchasing Division such as price lists, order forms, invoices, sales agreements, or maintenance agreements, and includes internet websites or other electronic documents. Acceptance or use of Vendor's forms does not constitute acceptance of the terms and conditions contained thereon.

27. ASSIGNMENT: Neither this Contract nor any monies due, or to become due hereunder, may be assigned by the Vendor without the express written consent of the Agency, the Purchasing Division, the Attorney General's office (as to form only), and any other government agency or office that may be required to approve such assignments.

28. WARRANTY: The Vendor expressly warrants that the goods and/or services covered by this Contract will: (a) conform to the specifications, drawings, samples, or other description furnished or specified by the Agency; (b) be merchantable and fit for the purpose intended; and (c) be free from defect in material and workmanship.

29. STATE EMPLOYEES: State employees are not permitted to utilize this Contract for personal use and the Vendor is prohibited from permitting or facilitating the same.

30. PRIVACY, SECURITY, AND CONFIDENTIALITY: The Vendor agrees that it will not disclose to anyone, directly or indirectly, any such personally identifiable information or other confidential information gained from the Agency, unless the individual who is the subject of the information consents to the disclosure in writing or the disclosure is made pursuant to the Agency's policies, procedures, and rules. Vendor further agrees to comply with the Confidentiality Policies and Information Security Accountability Requirements, set forth in www.state.wv.us/admin/purchase/privacy.

31. YOUR SUBMISSION IS A PUBLIC DOCUMENT: Vendor's entire response to the Solicitation and the resulting Contract are public documents. As public documents, they will be disclosed to the public following the bid/proposal opening or award of the contract, as required by the competitive bidding laws of West Virginia Code §§ 5A-3-1 et seq., 5-22-1 et seq., and 5G-1-1 et seq. and the Freedom of Information Act West Virginia Code §§ 29B-1-1 et seq.

DO NOT SUBMIT MATERIAL YOU CONSIDER TO BE CONFIDENTIAL, A TRADE SECRET, OR OTHERWISE NOT SUBJECT TO PUBLIC DISCLOSURE.

Submission of any bid, proposal, or other document to the Purchasing Division constitutes your explicit consent to the subsequent public disclosure of the bid, proposal, or document. The Purchasing Division will disclose any document labeled "confidential," "proprietary," "trade secret," "private," or labeled with any other claim against public disclosure of the documents, to include any "trade secrets" as defined by West Virginia Code § 47-22-1 et seq. All submissions are subject to public disclosure without notice.

32. LICENSING: In accordance with West Virginia Code of State Rules § 148-1-6.1.e, Vendor must be licensed and in good standing in accordance with any and all state and local laws and requirements by any state or local agency of West Virginia, including, but not limited to, the West Virginia Secretary of State's Office, the West Virginia Tax Department, West Virginia Insurance Commission, or any other state agency or political subdivision. Obligations related to political subdivisions may include, but are not limited to, business licensing, business and occupation taxes, inspection compliance, permitting, etc. Upon request, the Vendor must provide all necessary releases to obtain information to enable the Purchasing Division Director or the Agency to verify that the Vendor is licensed and in good standing with the above entities.

> **SUBCONTRACTOR COMPLIANCE:** Vendor shall notify all subcontractors providing commodities or services related to this Contract that as subcontractors, they too are required to be licensed, in good standing, and up-to-date on all state and local obligations as described in this section. Obligations related to political subdivisions may include, but are not limited to, business licensing, business and occupation taxes, inspection compliance, permitting, etc. Notification under this provision must occur prior to the performance of any work under the contract by the subcontractor.

33. ANTITRUST: In submitting a bid to, signing a contract with, or accepting a Award Document from any agency of the State of West Virginia, the Vendor agrees to convey, sell, assign, or transfer to the State of West Virginia all rights, title, and interest in and to all causes of action it may now or hereafter acquire under the antitrust laws of the United States and the State of West Virginia for price fixing and/or unreasonable restraints of trade relating to the particular commodities or services purchased or acquired by the State of West Virginia. Such assignment shall be made and become effective at the time the purchasing agency tenders the initial payment to Vendor.

34. VENDOR NON-CONFLICT: Neither Vendor nor its representatives are permitted to have any interest, nor shall they acquire any interest, direct or indirect, which would compromise the performance of its services hereunder. Any such interests shall be promptly presented in detail to the Agency.

35. VENDOR RELATIONSHIP: The relationship of the Vendor to the State shall be that of an independent contractor and no principal-agent relationship or employer-employee relationship is contemplated or created by this Contract. The Vendor as an independent contractor is solely liable for the acts and omissions of its employees and agents. Vendor shall be responsible for selecting, supervising, and compensating any and all individuals employed pursuant to the terms of this Solicitation and resulting contract. Neither the Vendor, nor any employees or subcontractors of the Vendor, shall be deemed to be employees of the State for any purpose whatsoever. Vendor shall be exclusively responsible for payment of employees and contractors for all wages and salaries, taxes, withholding payments, penalties, fees, fringe benefits, professional liability insurance premiums, contributions to insurance and pension, or other deferred compensation plans, including but not limited to, Workers' Compensation and Social Security obligations, licensing fees, etc. and the filing of all necessary documents, forms, and returns pertinent to all of the foregoing.

Vendor shall hold harmless the State, and shall provide the State and Agency with a defense against any and all claims including, but not limited to, the foregoing payments, withholdings, contributions, taxes, Social Security taxes, and employer income tax returns.

36. INDEMNIFICATION: The Vendor agrees to indemnify, defend, and hold harmless the State and the Agency, their officers, and employees from and against: (1) Any claims or losses for services rendered by any subcontractor, person, or firm performing or supplying services, materials, or supplies in connection with the performance of the Contract; (2) Any claims or losses resulting to any person or entity injured or damaged by the Vendor, its officers, employees, or subcontractors by the publication, translation, reproduction, delivery, performance, use, or disposition of any data used under the Contract in a manner not authorized by the Contract, or by Federal or State statutes or regulations; and (3) Any failure of the Vendor, its officers, employees, or subcontractors to observe State and Federal laws including, but not limited to, labor and wage and hour laws.

37. NO DEBT CERTIFICATION: In accordance with West Virginia Code §§ 5A-3-10a and 5-22-1(i), the State is prohibited from awarding a contract to any bidder that owes a debt to the State or a political subdivision of the State. By submitting a bid, or entering into a contract with the State, Vendor is affirming that (1) for construction contracts, the Vendor is not in default on any monetary obligation owed to the state or a political subdivision of the state, and (2) for all other contracts, neither the Vendor nor any related party owe a debt as defined above, and neither the Vendor nor any related party are in employer default as defined in the statute cited above unless the debt or employer default is permitted under the statute.

38. CONFLICT OF INTEREST: Vendor, its officers or members or employees, shall not presently have or acquire an interest, direct or indirect, which would conflict with or compromise the performance of its obligations hereunder. Vendor shall periodically inquire of its officers, members and employees to ensure that a conflict of interest does not arise. Any conflict of interest discovered shall be promptly presented in detail to the Agency.

39. REPORTS: Vendor shall provide the Agency and/or the Purchasing Division with the following reports identified by a checked box below:

☑ Such reports as the Agency and/or the Purchasing Division may request. Requested reports may include, but are not limited to, quantities purchased, agencies utilizing the contract, total contract expenditures by agency, etc.

☐ Quarterly reports detailing the total quantity of purchases in units and dollars, along with a listing of purchases by agency. Quarterly reports should be delivered to the Purchasing Division via email at purchasing.division@wv.gov.

40. BACKGROUND CHECK: In accordance with W. Va. Code § 15-2D-3, the State reserves the right to prohibit a service provider's employees from accessing sensitive or critical information or to be present at the Capitol complex based upon results addressed from a criminal background check. Service providers should contact the West Virginia Division of Protective Services by phone at (304) 558-9911 for more information.

41. PREFERENCE FOR USE OF DOMESTIC STEEL PRODUCTS: Except when authorized by the Director of the Purchasing Division pursuant to W. Va. Code § 5A-3-56, no contractor may use or supply steel products for a State Contract Project other than those steel products made in the United States. A contractor who uses steel products in violation of this section may be subject to civil penalties pursuant to W. Va. Code § 5A-3-56. As used in this section:

a. "State Contract Project" means any erection or construction of, or any addition to, alteration of or other improvement to any building or structure, including, but not limited to, roads or highways, or the installation of any heating or cooling or ventilating plants or other equipment, or the supply of and materials for such projects, pursuant to a contract with the State of West Virginia for which bids were solicited on or after June 6, 2001.

b. "Steel Products" means products rolled, formed, shaped, drawn, extruded, forged, cast, fabricated or otherwise similarly processed, or processed by a combination of two or more or such operations, from steel made by the open heath, basic oxygen, electric furnace, Bessemer or other steel making process.

c. The Purchasing Division Director may, in writing, authorize the use of foreign steel products if:

    1. The cost for each contract item used does not exceed one tenth of one percent (.1%) of the total contract cost or two thousand five hundred dollars ($2,500.00), whichever is greater. For the purposes of this section, the cost is the value of the steel product as delivered to the project; or

    2. The Director of the Purchasing Division determines that specified steel materials are not produced in the United States in sufficient quantity or otherwise are not reasonably available to meet contract requirements.

42. PREFERENCE FOR USE OF DOMESTIC ALUMINUM, GLASS, AND STEEL: In Accordance with W. Va. Code § 5-19-1 et seq., and W. Va. CSR § 148-10-1 et seq., for every contract or subcontract, subject to the limitations contained herein, for the construction, reconstruction, alteration, repair, improvement or maintenance of public works or for the purchase of any item of machinery or equipment to be used at sites of public works, only domestic aluminum, glass or steel products shall be supplied unless the spending officer determines, in writing, after the receipt of offers or bids, (1) that the cost of domestic aluminum, glass or steel products is unreasonable or inconsistent with the public interest of the State of West Virginia, (2) that domestic aluminum, glass or steel products are not produced in sufficient quantities to meet the contract requirements, or (3) the available domestic aluminum, glass, or steel do not meet the contract specifications. This provision only applies to public works contracts awarded in an amount more than fifty thousand dollars ($50,000) or public works contracts that require more than ten thousand pounds of steel products.

The cost of domestic aluminum, glass, or steel products may be unreasonable if the cost is more than twenty percent (20%) of the bid or offered price for foreign made aluminum, glass, or steel products. If the domestic aluminum, glass or steel products to be supplied or produced in a "substantial labor surplus area", as defined by the United States Department of Labor, the cost of domestic aluminum, glass, or steel products may be unreasonable if the cost is more than thirty percent (30%) of the bid or offered price for foreign made aluminum, glass, or steel products. This preference shall be applied to an item of machinery or equipment, as indicated above, when the item is a single unit of equipment or machinery manufactured primarily of aluminum, glass or steel, is part of a public works contract and has the sole purpose or of being a permanent part of a single public works project. This provision does not apply to equipment or machinery purchased by a spending unit for use by that spending unit and not as part of a single public works project.

All bids and offers including domestic aluminum, glass or steel products that exceed bid or offer prices including foreign aluminum, glass or steel products after application of the preferences provided in this provision may be reduced to a price equal to or lower than the lowest bid or offer price for foreign aluminum, glass or steel products plus the applicable preference. If the reduced bid or offer prices are made in writing and supersede the prior bid or offer prices, all bids or offers, including the reduced bid or offer prices, will be reevaluated in accordance with this rule.

43. INTERESTED PARTY SUPPLEMENTAL DISCLOSURE: W. Va. Code § 6D-1-2 requires that for contracts with an actual or estimated value of at least $1 million, the Vendor must submit to the Agency a disclosure of interested parties prior to beginning work under this Contract. Additionally, the Vendor must submit a supplemental disclosure of interested parties reflecting any new or differing interested parties to the contract, which were not included in the original pre-work interested party disclosure, within 30 days following the completion or termination of the contract. A copy of that form is included with this solicitation or can be obtained from the WV Ethics Commission. This requirement does not apply to publicly traded companies listed on a national or international stock exchange. A more detailed definition of interested parties can be obtained from the form referenced above.

44. PROHIBITION AGAINST USED OR REFURBISHED: Unless expressly permitted in the solicitation published by the State, Vendor must provide new, unused commodities, and is prohibited from supplying used or refurbished commodities, in fulfilling its responsibilities under this Contract.

45. VOID CONTRACT CLAUSES: This Contract is subject to the provisions of West Virginia Code § 5A-3-62, which automatically voids certain contract clauses that violate State law.

46. ISRAEL BOYCOTT: Bidder understands and agrees that, pursuant to W. Va. Code § 5A-3-63, it is prohibited from engaging in a boycott of Israel during the term of this contract.

ADDITIONAL TERMS AND CONDITIONS (Construction Contracts Only)

1. CONTRACTOR'S LICENSE: Until June 15, 2021, West Virginia Code § 21-11-2, and after that date, § 30-42-2, requires that all persons desiring to perform contracting work in this state be licensed. The West Virginia Contractors Licensing Board is empowered to issue the contractor's license. Applications for a contractor's license may be made by contacting the West Virginia Contractor Licensing Board.

The apparent successful Vendor must furnish a copy of its contractor's license prior to the issuance of a contract award document.

2. BONDS: The following bonds must be submitted:

☑ **BID BOND:** Pursuant to the requirements contained in W. Va. Code § 5-22-1(c), All Vendors submitting a bid on a construction project shall furnish a valid bid bond in the amount of five percent (5%) of the total amount of the bid protecting the State of West Virginia. **THE BID BOND MUST BE SUBMITTED WITH THE BID OR VENDOR'S BID WILL BE DISQUALIFIED.**

☑ **PERFORMANCE BOND:** The apparent successful Vendor shall provide a performance bond in the amount of 100% of the contract. The performance bond must be received by the Purchasing Division prior to Contract award. (Attorney General requires use of the State approved bond forms found at: www.state.wv.us/admin/purchase/forms2.html)

☑ **LABOR/MATERIAL PAYMENT BOND**: The apparent successful Vendor shall provide a labor/material payment bond in the amount of 100% of the Contract value. The labor/material payment bond must be delivered to the Purchasing Division prior to Contract award. (Attorney General requires use of the State approved bond forms found at: www.state.wv.us/admin/purchase/forms2.html)

☐ **MAINTENANCE BOND:** The apparent successful Vendor shall provide a two (2) year maintenance bond covering the roofing system if the work impacts an existing roof. The amount of the bond must be equal to the price associated with the percentage of the project impacting the roof. The maintenance bond must be issued and delivered to the Purchasing Division prior to Contract award. (Attorney General requires use of the State approved bond forms found at: www.state.wv.us/admin/purchase/forms2.html)

At a minimum, all construction projects require a bid bond, performance bond, and labor/material payment bond. Failure on the part of the state of West Virginia to checkmark the required bonds above does not relieve the vendor from the legal requirement of providing these bonds.

In lieu of the Bid Bond, the Vendor may provide certified checks, cashier's checks, or irrevocable letters of credit. Any certified check, cashier's check, or irrevocable letter of credit provided in lieu of the bid bond must be of the same amount required of the Bid Bond and delivered with the bid.

3. DRUG-FREE WORKPLACE AFFIDAVIT: W. Va. Code § 21-1D-5 provides that any solicitation for a public improvement contract requires each Vendor that submits a bid for the work to submit an affidavit that the Vendor has a written plan for a drug-free workplace policy. If the affidavit is not submitted with the bid submission, the Purchasing Division shall promptly request by telephone and electronic mail that the low bidder and second low bidder provide the affidavit within one business day of the request. Failure to submit the affidavit within one business day of receiving the request shall result in disqualification of the bid. To comply with this law, Vendor should complete the enclosed drug-free workplace affidavit and submit the same with its bid. Failure to submit the signed and notarized drugfree workplace affidavit or a similar affidavit that fully complies with the requirements of the applicable code, within one business day of being requested to do so shall result in disqualification of Vendor's bid. Pursuant to W. Va. Code 21-1D-2(b) and (k), this provision does not apply to public improvement contracts the value of which is $100,000 or less or temporary or emergency repairs.

3.1. DRUG-FREE WORKPLACE POLICY: Pursuant to W. Va. Code § 21-1D-4, Vendor and its subcontractors must implement and maintain a written drug-free workplace policy that complies with said article. The awarding public authority shall cancel this contract if: (1) Vendor fails to implement and maintain a written drug-free workplace policy described in the preceding paragraph, (2) Vendor fails to provide information regarding implementation of its drug-free workplace policy at the request of the public authority; or (3) Vendor provides to the public authority false information regarding the contractor's drug-free workplace policy.

Pursuant to W. Va. Code 21-1D-2(b) and (k), this provision does not apply to public improvement contracts the value of which is $100,000 or less or temporary or emergency repairs.

4. DRUG FREE WORKPLACE REPORT: Pursuant to W. Va. Code § 21-1D-7b, no less than once per year, or upon completion of the project, every contractor shall provide a certified report to the public authority which let the contract. For contracts over $25,000, the public authority shall be the West Virginia Purchasing Division. For contracts of $25,000 or less, the public authority shall be the agency issuing the contract. The report shall include:

(1) Information to show that the education and training service to the requirements of West Virginia Code § 21-1D-5 was provided;

(2) The name of the laboratory certified by the United States Department of Health and Human Services or its successor that performs the drug tests;

(3) The average number of employees in connection with the construction on the public improvement;

(4) Drug test results for the following categories including the number of positive tests and the number of negative tests: (A) Pre-employment and new hires; (B) Reasonable suspicion; (C) Post-accident; and (D) Random.

Vendor should utilize the attached Certified Drug Free Workplace Report Coversheet when submitting the report required hereunder. Pursuant to W. Va. Code 21-1D-2(b) and (k), this provision does not apply to public improvement contracts the value of which is $100,000 or less or temporary or emergency repairs.

5. AIA DOCUMENTS: All construction contracts that will be completed in conjunction with architectural services procured under Chapter 5G of the West Virginia Code will be governed by the attached AIA documents, as amended by the Supplementary Conditions for the State of West Virginia, in addition to the terms and conditions contained herein.

6. PROHIBITION AGAINST GENERAL CONDITIONS: Notwithstanding anything contained in the AIA Documents or the Supplementary Conditions, the State of West Virginia will not pay for general conditions, or winter conditions, or any other condition representing a delay in the contracts. The Vendor is expected to mitigate delay costs to the greatest extent possible and any costs associated with Delays must be specifically and concretely identified. The state will not consider an average daily rate multiplied by the number of days extended to be an acceptable charge.

7. GREEN BUILDINGS MINIMUM ENERGY STANDARDS: In accordance with § 22-29-4, all new building construction projects of public agencies that have not entered the schematic design phase prior to July 1, 2012, or any building construction project receiving state grant funds and appropriations, including public schools, that have not entered the schematic design phase prior to July 1, 2012, shall be designed and constructed complying with the ICC International Energy Conservation Code, adopted by the State Fire Commission, and the ANSI/ASHRAE/IESNA Standard 90.1-2007: Provided, That if any construction project has a commitment of federal funds to pay for a portion of such project, this provision shall only apply to the extent such standards are consistent with the federal standards.

8. LOCAL LABOR MARKET HIRING REQUIREMENT: Pursuant to West Virginia Code §21-1C-1 et seq., Employers shall hire at least seventy-five percent of employees for public improvement construction projects from the local labor market, to be rounded off, with at least two employees from outside the local labor market permissible for each employer per project.

Any employer unable to employ the minimum number of employees from the local labor market shall inform the nearest office of Workforce West Virginia of the number of qualified employees needed and provide a job description of the positions to be filled.

If, within three business days following the placing of a job order, Workforce West Virginia is unable to refer any qualified job applicants to the employer or refers less qualified job applicants than the number requested, then Workforce West Virginia shall issue a waiver to the employer stating the unavailability of applicant and shall permit the employer to fill any positions covered by the waiver from outside the local labor market. The waiver shall be in writing and shall be issued within the prescribed three days. A waiver certificate shall be sent to both the employer for its permanent project records and to the public authority.

Any employer who violates this requirement is subject to a civil penalty of $250 per each employee less than the required threshold of seventy-five percent per day of violation after receipt of a notice of violation.

Any employer that continues to violate any provision of this article more than fourteen calendar days after receipt of a notice of violation is subject to a civil penalty of $500 per each employee less than the required threshold of seventy-five percent per day of violation.

The following terms used in this section have the meaning shown below.

(1) The term "construction project" means any construction, reconstruction, improvement, enlargement, painting, decorating or repair of any public improvement let to contract in an amount equal to or greater than $500,000. The term "construction project" does not include temporary or emergency repairs;

(2) The term "employee" means any person hired or permitted to perform hourly work for wages by a person, firm or corporation in the construction industry; The term "employee" does not include:(i) Bona fide employees of a public authority or individuals engaged in making temporary or emergency repairs;(ii) Bona fide independent contractors; or(iii) Salaried supervisory personnel necessary to assure efficient execution of the employee's work;

(3) The term "employer" means any person, firm or corporation employing one or more employees on any public improvement and includes all contractors and subcontractors;

(4) The term "local labor market" means every county in West Virginia and any county outside of West Virginia if any portion of that county is within fifty miles of the border of West Virginia;

(5) The term "public improvement" includes the construction of all buildings, roads, highways, bridges, streets, alleys, sewers, ditches, sewage disposal plants, waterworks, airports and all other structures that may be let to contract by a public authority, excluding improvements funded, in whole or in part, by federal funds.

9. DAVIS-BACON AND RELATED ACT WAGE RATES:

☑ The work performed under this contract is federally funded in whole, or in part. Pursuant to 2 CFR 200.317, Vendors are required to pay applicable Davis-Bacon wage rates.

☐ The work performed under this contract is not subject to Davis-Bacon wage rates.

10. SUBCONTRACTOR LIST SUBMISSION: In accordance with W. Va. Code § 5-22-1, the apparent low bidder on a contract valued at more than $250,000.00 for the construction, alteration, decoration, painting or improvement of a new or existing building or structure shall submit a list of all subcontractors who will perform more than $25,000.00 of work on the project including labor and materials. (This section does not apply to any other construction projects, such as highway, mine reclamation, water or sewer projects.) The subcontractor list shall be provided to the Purchasing Division within one business day of the opening of bids for review.
If the apparent low bidder fails to submit the subcontractor list, the Purchasing Division shall promptly request by telephone and electronic mail that the low bidder and second low bidder provide the subcontractor list within one business day of the request. Failure to submit the subcontractor list within one business day of receiving the request shall result in disqualification of the bid.

If no subcontractors who will perform more than $25,000.00 of work are to be used to complete the project, the apparent low bidder must make this clear on the subcontractor list, in the bid itself, or in response to the Purchasing Division's request for the subcontractor list.

a. Required Information. The subcontractor list must contain the following information:

i. Bidder's name

ii. Name of each subcontractor performing more than $25,000 of work on the project.

iii. The license number of each subcontractor, as required by W. Va. Code § 21-11-1 et. seq.

iv. If applicable, a notation that no subcontractor will be used to perform more than $25,000.00 of work. (This item iv. is not required if the vendor makes this clear in the bid itself or in documentation following the request for the subcontractor list.)

b. Subcontractor List Submission Form: The subcontractor list may be submitted in any form, including the attached form, as long as the required information noted above is included. If any information is missing from the bidder's subcontractor list submission, it may be obtained from other documents such as bids, emails, letters, etc. that accompany the subcontractor list submission.

c. Substitution of Subcontractor. Written approval must be obtained from the State Spending Unit before any subcontractor substitution is permitted. Substitutions are not permitted unless:

i. The subcontractor listed in the original bid has filed for bankruptcy;

ii. The subcontractor in the original bid has been debarred or suspended; or

iii. The contractor certifies in writing that the subcontractor listed in the original bid fails, is unable, or refuses to perform his subcontract.

Subcontractor List Submission (Construction Contracts Only)

Bidder's Name: Harbel, Inc.

☑ Check this box if no subcontractors will perform more than $25,000.00 of work to complete the project.

Subcontractor Name	License Number if Required by W. Va. Code § 21-11-1 et. seq.

Attach additional pages if necessary

Revised 8/24/2023

DESIGNATED CONTACT: Vendor appoints the individual identified in this Section as the Contract Administrator and the initial point of contact for matters relating to this Contract.

(Printed Name and Title) Jared Burkett

(Address) 11521 Milnor Avenue/P.O. Box 358, Cumberland, MD 21501-0358

(Phone Number) / (Fax Number) 301-729-8303 / 301-729-0163

(email address) jburkett@thebeltgroup.com

CERTIFICATION AND SIGNATURE: By signing below, or submitting documentation through *wv*OASIS, I certify that: I have reviewed this Solicitation/Contract in its entirety; that I understand the requirements, terms and conditions, and other information contained herein; that this bid, offer or proposal constitutes an offer to the State that cannot be unilaterally withdrawn; that the product or service proposed meets the mandatory requirements contained in the Solicitation/Contract for that product or service, unless otherwise stated herein; that the Vendor accepts the terms and conditions contained in the Solicitation, unless otherwise stated herein; that I am submitting this bid, offer or proposal for review and consideration; that this bid or offer was made without prior understanding, agreement, or connection with any entity submitting a bid or offer for the same material, supplies, equipment or services; that this bid or offer is in all respects fair and without collusion or fraud; that this Contract is accepted or entered into without any prior understanding, agreement, or connection to any other entity that could be considered a violation of law; that I am authorized by the Vendor to execute and submit this bid, offer, or proposal, or any documents related thereto on Vendor's behalf; that I am authorized to bind the vendor in a contractual relationship; and that to the best of my knowledge, the vendor has properly registered with any State agency that may require registration.

By signing below, I further certify that I understand this Contract is subject to the provisions of West Virginia Code § 5A-3-62, which automatically voids certain contract clauses that violate State law; and that pursuant to W. Va. Code 5A-3-63, the entity entering into this contract is prohibited from engaging in a boycott against Israel.

Harbel, Inc.

(Company)

(Signature of Authorized Representative)

Jared Burkett, Vice President 5/23/2024

(Printed Name and Title of Authorized Representative) (Date)

301-729-8303 / 301-729-0163

(Phone Number) (Fax Number)

jburkett@thebeltgroup.com

(Email Address)

GENERAL CONSTRUCTION SPECIFICATIONS (No AIA Documents)

1. **PURPOSE AND SCOPE:** The West Virginia Purchasing Division is soliciting bids on behalf of the WV Army National Guard, Construction & Facilities Management Office, to establish a contract for the following:

   PROVIDE ALL LABOR, MATERIAL, TOOLS, SUPPLIES AND EQUIPMENT TO CONSTRUCT THREE (3) DECKS FOR THE CHALET(S) AT THE ARMY TRAINING SITE AT CAMP DAWSON, NEAR KINGWOOD, WV. Contractor shall coordinate work through the Agency Project Manager.

   The Vendor shall furnish all materials, labor, and equipment necessary to complete all Construction Services. The Vendor shall furnish any incidental work, materials, labor, and equipment that are necessary to complete the Construction Services, even if such incidental work is not explicitly included in the Project Plans.

   Due to the ongoing pandemic, vendors are asked to follow safety protocols, as instructed by Project Manager. Please follow the guidelines below regarding the meeting.

   - No more than two (2) representatives of the interested bidder may attend the site visit; to limit group size.
   - Site visits will take place the day of the Pre-Bid meeting in small groups as directed by the Agency Project Manager, vendors should plan on the possibility of being onsite for several hours, depending on the number of contractors who attend.
   - Visiting bidder representative(s) must abide by all safety precautions for safe social distancing, as prescribed by the Agency Project Manager.
   - The site visit is NOT an opportunity to ask or submit technical questions about the project. No verbal representations provided at a site visit are binding in any manner. Interested bidders should submit all technical questions per the instructions in the CFRQ.

   Where brand names are shown, these names are intended to describe a quality of product, and in no way are intended to limit products of equal quality. Therefore, products of other manufacturers may be employed for this work provided they are of equivalent materials and construction and are equally adaptable to the conditions as approved by the agency.

2. **DEFINITIONS:** The terms listed below shall have the meanings assigned to them below. Additional definitions can be found in section 2 of the General Terms and Conditions and in the Project Plans as defined below.

2.1 "Construction Services" means to provide turn-key installation, including all labor, materials, tools, supplies and equipment, to provide for the construction of three (3) decks for the Chalet(s) at the Army Training Site located at, Camp Dawson, Near Kingwood, WV as more fully described in the Project Plans.

2.2 "Pricing Page" means the pages contained in wvOASIS, attached hereto as Exhibit A, or included in the Project Plans upon which Vendor should list its proposed price for the Construction Services.

2.3 "Solicitation" means the official notice of an opportunity to supply the State with Construction Services that is published by the Purchasing Division.

2.4 "Project Plans" means documents developed by an architect, an engineer, the Agency, or another design professional, which are attached hereto as Exhibit B-D, that provide detailed instructions on how the Construction Services are to be performed. In the event that Project Plans contain drawings or other documents too large to attach in Exhibit B-D, Vendors can obtain copies in accordance with Section 9 of these Specifications.

3. **ORDER OF PRECEDENCE:** This General Construction Specifications document will have priority over, and supersede, anything contained in the Project Plans.

4. **QUALIFICATIONS:** Vendor, or Vendor's staff if requirements are inherently limited to individuals rather than corporate entities, shall have the following minimum qualifications:

   4.1. Experience: Vendor, or Vendor's supervisory staff assigned to this project, must have successfully completed at least five (5) projects that involved work similar to that described in these specifications or the Project Plans. Compliance with this experience requirement will be determined prior to contract award by the State through references provided by the Vendor upon request, through knowledge or documentation of the Vendor's past projects, through confirmation of experience requirements from the architect assisting the State in this project, or some other method that the State determines to be acceptable. Vendor must provide any documentation requested by the State to assist in confirmation of compliance with this provision. References, documentation, or other information to confirm compliance with this experience requirement may be requested after bid opening and prior to contract award.

5. **CONTRACT AWARD:** The Contract is intended to provide Agency with a purchase price for the Construction Services. The Contract will be awarded to the lowest qualified responsible bidder meeting the required specifications.

6. **SELECTION OF ALTERNATES:** Pursuant to W. Va. Code § 5-22-1(f), any solicitation of bids shall include no more than five alternates. Alternates, if accepted, shall be accepted in the order in which they are listed on the bid form. Any unaccepted alternate contained within a bid shall expire 90 days after the date of the opening of bids for review. Determination of the lowest qualified responsible bidder shall be based on the sum of the base bid and any alternates accepted. **This project has no (0) alternates**.

7. **PERFORMANCE:** Vendor shall perform the Construction Services in accordance with this document and the Project Plans.

8. **SUBSTITUTIONS:** Any substitution requests must be submitted in accordance with the official question and answer period described in the INSTRUCTIONS TO VENDORS SUBMITTING BIDS, Paragraph 4. Vendor Question Deadline. Vendors submitting substitution requests should submit product brochures and product specifications during the official question and answer period.

9. **PROJECT PLANS:** The checked box will apply to Project Plans for this solicitation.

   ☐ **No Additional Project Plan Documents:** There are no additional Project Plans other than those attached hereto as Exhibit(s) B-D or any subsequent addenda modifying Exhibit(s) B-D.

10. **CONDITIONS OF THE WORK**

    10.1. Permits: The Vendor shall procure all necessary permits and licenses to comply with all applicable Federal, State, or Local laws, regulations and ordinances of any regulating body.

    10.2. Existing Conditions: If discrepancies are discovered between the existing conditions and those noted in the specifications, Vendor must immediately notify the Agency's representative. Vendor must also immediately notify the Agency if suspected hazardous materials are encountered.

    10.3. Standard Work Hours: The standard hours of work for this Contract will be Monday through Friday from 7:30am to 4:00pm, excluding holidays recognized by the State of West Virginia. Any work outside of the standard hours of work must be approved in advance at the Agency's sole discretion. Authorization of work outside of the standard hours of work will not entitle Vendor to additional compensation.

    10.4. Project Closeout: Project Closeout shall include the following:

10.4.1. Final Cleanup: Vendor shall perform the final cleanup activities listed below, along with any other final cleanup activities normally associated with the work performed under this Contract, prior to final inspection:

10.4.1.1. Contractor is responsible for removing all construction debris daily.
10.4.1.2. Contractor is responsible for removing and disposing of any demolished material, off site and at the contractor's expense.

10.4.2. Final Inspection: Vendor shall participate in a final inspection with the Agency's project manager. The purpose of the final inspection will be to identify deficiencies that need to be remedied prior to Agency's final acceptance of the work. Vendor shall at all times be obligated to perform in accordance with the Contract and must take all actions necessary to ensure that work complies with requirements of Contract prior to final acceptance. Final acceptance does not waive or release Vendor from its obligation to ensure that work complies with the Contract requirements. Vendor shall submit any warranty documents to the Agency project manager at final inspection.

10.5. Payment:

10.5.1 Agency shall pay flat fee as shown on the Bid Form, for all Contract Services performed and accepted under this Contract. Vendor shall accept payment in accordance with the payment procedures of the State of West Virginia.

10.5.2 Invoices shall be submitted for payment (in arrears) and must include the following information:

10.5.2.1 Invoice must include, at a minimum, invoice date, FEIN number, complete address of vendor and Contract number.

10.5.2.2 Invoices shall be mailed to the following address:
WV Army National Guard
Construction & Facilities Management Office
1707 Coonskin Drive
Attn: Accounts Payable
Charleston, WV 25311

11. FACILITIES ACCESS: Performance of Contract Services may require access cards and/or keys to gain entrance to Agency's facilities. In the event that access cards and/or keys are required:

11.1. Vendor must identify principal service personnel which will be issued access cards and/or keys to perform service.

11.2. Vendor will be responsible for controlling cards and keys and will pay replacement fee, if the cards or keys become lost or stolen.

11.3. Vendor shall notify Agency immediately of any lost, stolen, or missing card or key.

11.4. Anyone performing under this Contract will be subject to Agency's security protocol and procedures.

11.5. Vendor shall inform all staff of Agency's security protocol and procedures.

12. MISCELLANEOUS:

12.1. Contract Manager: During its performance of this Contract, Vendor must designate and maintain a primary contract manager responsible for overseeing Vendor's responsibilities under this Contract. The Contract manager must be available during normal business hours to address any customer service or other issues related to this Contract. Vendor should list its Contract manager and his or her contact information below.

Contract Manager: **Jeremy Irons**

Telephone Number: **301-729-8303**

Fax Number: **301-729-0163**

Email Address: **jgirons@thebeltgroup.com**

a. **Liquidated Damages:** Contractor shall pay liquidated damages in the amount of $1,500.00 per day of delay, plus a one-time fixed cost of $1,250.00 for Staff Judge Advocate review for work not completed after contract completion date. This clause shall in no way be considered exclusive and shall not limit the State or Agency's right to pursue any other available remedy.

EXHIBIT A – Pricing Page

Exhibit "A" Pricing Page CRFQ# ADJ24*17

ALL LABOR, MATERIALS, EQUIPMENT, AND SUPPLIES NECESSARY TO PROVIDE FOR REPLACEMENT CONSTRUCTION OF THREE DECKS FOR CHALET(S) AT THE CAMP DAWSON ARMY TRAINING SITE FACILITY
240 ARMY ROAD, KINGWOOD, WV

BID FORM

The undersigned, hereafter called the Bidder, being familiar with and understanding the bidding documents; and being familiar with the site and all local conditions affecting the Project, hereby proposes to furnish labor, material, equipment, supplies, and transportation to perform the work as described in the bidding documents.

BIDDERS COMPANY NAME: Harbel, Inc.

VENDOR ADDRESS: 11521 Milnor Avenue
P.O. Box 358
Cumberland, MD 21501-0358

TELEPHONE: 301-729-8303

FAX NUMBER: 301-729-0163

E-MAIL ADDRESS: jburkett@thebeltgroup.com

CONTRACT TOTAL COST: **BASE BID-CONTRACT ITEM NO.1- Replacement Construction of three (3) decks for the Chalet(s) at Camp Dawson per the attached specifications.**

Sixty Nine Thousand, Eight Hundred Dollars and Zero Cents

($ 69,800.00) *** (Contract bid to be written in words and numbers.)

SIGNATURE: DATE: 5/23/2024

NAME: Jared Burkett
(Please Print)

TITLE: Vice President

Agency_____
REQ.P.O#_____

BID BOND

KNOW ALL MEN BY THESE PRESENTS, That we, the undersigned, Harbel, Inc. of Cumberland, Maryland, as Principal, and Fidelity and Deposit Company of Maryland of Cumberland, Maryland, a corporation organized and existing under the laws of the State of Illinois with its principal office in the City of Schaumburg, as Surety, are held and firmly bound unto the State of West Virginia, as Obligee, in the penal sum of Five Percent of Total Bid Amount ($ 5% of Total Bid Amount) for the payment of which, well and truly to be made, we jointly and severally bind ourselves, our heirs, administrators, executors, successors and assigns.

The Condition of the above obligation is such that whereas the Principal has submitted to the Purchasing Section of the Department of Administration a certain bid or proposal, attached hereto and made a part hereof, to enter into a contract in writing for CRFQ 0603 ADJ2400000017 - Camp Dawson Chalet Deck Replacement

NOW THEREFORE,

(a) If said bid shall be rejected, or

(b) If said bid shall be accepted and the Principal shall enter into a contract in accordance with the bid or proposal attached hereto and shall furnish any other bonds and insurance required by the bid or proposal, and shall in all other respects perform the agreement created by the acceptance of said bid, then this obligation shall be null and void, otherwise this obligation shall remain in full force and effect. It is expressly understood and agreed that the liability of the Surety for any and all claims hereunder shall, in no event, exceed the penal amount of this obligation as herein stated.

The Surety, for the value received, hereby stipulates and agrees that the obligations of said Surety and its bond shall be in no way impaired or affected by any extension of the time within which the Obligee may accept such bid, and said Surety does hereby waive notice of any such extension.

WITNESS, the following signatures and seals of Principal and Surety, executed and sealed by a proper officer of Principal and Surety, or by Principal individually if Principal is an individual, this 23rd day of May, 2024.

Principal Seal

Harbel, Inc.
(Name of Principal)

By [signature]
(Must be President, Vice President, or Duly Authorized Agent)

President
(Title)

Surety Seal

Fidelity and Deposit Company of Maryland
(Name of Surety)

[signature]
West Virginia Countersignature

[signature]
Attorney-in-Fact

IMPORTANT – Surety executing bonds must be licensed in West Virginia to transact surety insurance, must affix its seal, and must attach a power of attorney with its seal affixed.

EXTRACT FROM BY-LAWS OF THE COMPANIES

"Article V, Section 8. Attorneys-in-Fact. The Chief Executive Officer, the President, or any Executive Vice President or Vice President may, by written instrument under the attested corporate seal, appoint attorneys-in-fact with authority to execute bonds, policies, recognizances, stipulations, undertakings, or other like instruments on behalf of the Company, and may authorize any officer or any such attorney-in-fact to affix the corporate seal thereto; and may with or without cause modify of revoke any such appointment or authority at any time."

CERTIFICATE

I, the undersigned, Vice President of the ZURICH AMERICAN INSURANCE COMPANY, the COLONIAL AMERICAN CASUALTY AND SURETY COMPANY, and the FIDELITY AND DEPOSIT COMPANY OF MARYLAND, do hereby certify that the foregoing Power of Attorney is still in full force and effect on the date of this certificate; and I do further certify that Article V, Section 8, of the By-Laws of the Companies is still in force.

This Power of Attorney and Certificate may be signed by facsimile under and by authority of the following resolution of the Board of Directors of the ZURICH AMERICAN INSURANCE COMPANY at a meeting duly called and held on the 15th day of December 1998.

RESOLVED: "That the signature of the President or a Vice President and the attesting signature of a Secretary or an Assistant Secretary and the Seal of the Company may be affixed by facsimile on any Power of Attorney...Any such Power or any certificate thereof bearing such facsimile signature and seal shall be valid and binding on the Company."

This Power of Attorney and Certificate may be signed by facsimile under and by authority of the following resolution of the Board of Directors of the COLONIAL AMERICAN CASUALTY AND SURETY COMPANY at a meeting duly called and held on the 5th day of May, 1994, and the following resolution of the Board of Directors of the FIDELITY AND DEPOSIT COMPANY OF MARYLAND at a meeting duly called and held on the 10th day of May, 1990.

RESOLVED: "That the facsimile or mechanically reproduced seal of the company and facsimile or mechanically reproduced signature of any Vice-President, Secretary, or Assistant Secretary of the Company, whether made heretofore or hereafter, wherever appearing upon a certified copy of any power of attorney issued by the Company, shall be valid and binding upon the Company with the same force and effect as though manually affixed.

IN TESTIMONY WHEREOF, I have hereunto subscribed my name and affixed the corporate seals of the said Companies, this 23rd day of May, 2024.

Colonial American Casualty and Surety Company CORPORATE SEAL

ZURICH AMERICAN INSURANCE COMPANY CORPORATE SEAL 1977 NEW YORK

Fidelity and Deposit Company of Maryland CORPORATE SEAL 1890

Mary Jean Pethick
Vice President

TO REPORT A CLAIM WITH REGARD TO A SURETY BOND, PLEASE SUBMIT A COMPLETE DESCRIPTION OF THE CLAIM INCLUDING THE PRINCIPAL ON THE BOND, THE BOND NUMBER, AND YOUR CONTACT INFORMATION TO:

Zurich Surety Claims
1299 Zurich Way
Schaumburg, IL 60196-1056
reportsfclaims@zurichna.com
800-626-4577

Authenticity of this bond can be confirmed at bondvalidator.zurichna.com or 410-559-8790

ZURICH AMERICAN INSURANCE COMPANY
COLONIAL AMERICAN CASUALTY AND SURETY COMPANY
FIDELITY AND DEPOSIT COMPANY OF MARYLAND
POWER OF ATTORNEY

KNOW ALL MEN BY THESE PRESENTS: That the ZURICH AMERICAN INSURANCE COMPANY, a corporation of the State of New York, the COLONIAL AMERICAN CASUALTY AND SURETY COMPANY, a corporation of the State of Illinois, and the FIDELITY AND DEPOSIT COMPANY OF MARYLAND a corporation of the State of Illinois (herein collectively called the "Companies"), by Robert D. Murray, Vice President, in pursuance of authority granted by Article V, Section 8, of the By-Laws of said Companies, which are set forth on the reverse side hereof and are hereby certified to be in full force and effect on the date hereof, do hereby nominate, constitute, and appoint **Lisa WINCHESTER, Shelley MCCABE, Kayla D. MCCULLOUGH, Gregory A. SMITH, Patrick BUCK, Gillian ROE, Carol UADISKI of Cumberland, Maryland,,** its true and lawful agent and Attorney-in-Fact, to make, execute, seal and deliver, for, and on its behalf as surety, and as its act and deed: **any and all bonds and undertakings,** and the execution of such bonds or undertakings in pursuance of these presents, shall be as binding upon said Companies, as fully and amply, to all intents and purposes, as if they had been duly executed and acknowledged by the regularly elected officers of the ZURICH AMERICAN INSURANCE COMPANY at its office in New York, New York., the regularly elected officers of the COLONIAL AMERICAN CASUALTY AND SURETY COMPANY at its office in Owings Mills, Maryland., and the regularly elected officers of the FIDELITY AND DEPOSIT COMPANY OF MARYLAND at its office in Owings Mills, Maryland., in their own proper persons.

The said Vice President does hereby certify that the extract set forth on the reverse side hereof is a true copy of Article V, Section 8, of the By-Laws of said Companies, and is now in force.

IN WITNESS WHEREOF, the said Vice-President has hereunto subscribed his/her names and affixed the Corporate Seals of the said **ZURICH AMERICAN INSURANCE COMPANY, COLONIAL AMERICAN CASUALTY AND SURETY COMPANY, and FIDELITY AND DEPOSIT COMPANY OF MARYLAND,** this 3rd day of October, A.D. 2023.

ATTEST:
ZURICH AMERICAN INSURANCE COMPANY
COLONIAL AMERICAN CASUALTY AND SURETY COMPANY
FIDELITY AND DEPOSIT COMPANY OF MARYLAND

By: Robert D. Murray
Vice President

By: Dawn E. Brown
Secretary

State of Maryland
County of Baltimore

On this 3rd day of October, A.D. 2023, before the subscriber, a Notary Public of the State of Maryland, duly commissioned and qualified, **Robert D. Murray, Vice President and Dawn E. Brown, Secretary** of the Companies, to me personally known to be the individuals and officers described in and who executed the preceding instrument, and acknowledged the execution of same, and being by me duly sworn, deposeth and saith, that he/she is the said officer of the Company aforesaid, and that the seals affixed to the preceding instrument are the Corporate Seals of said Companies, and that the said Corporate Seals and the signature as such officer were duly affixed and subscribed to the said instrument by the authority and direction of the said Corporations.

IN TESTIMONY WHEREOF, I have hereunto set my hand and affixed my Official Seal the day and year first above written.

Genevieve M. Maison

GENEVIEVE M. MAISON
NOTARY PUBLIC
BALTIMORE COUNTY, MD
My Commission Expires JANUARY 27 2025

Authenticity of this bond can be confirmed at bondvalidator.zurichna.com or 410-559-8790

WV-73
Approved / April 30, 2020

State of West Virginia
DRUG FREE WORKPLACE CONFORMANCE AFFIDAVIT
***West Virginia Code* §21-1D-5**

I, Jared Burkett, after being first duly sworn, depose and state as follows:

1. I am an employee of Harbel, Inc.; and,
(Company Name)

2. I do hereby attest that Harbel, Inc.
(Company Name)

maintains a written plan for a drug-free workplace policy and that such plan and policy are in compliance with ***West Virginia Code*** §21-1D.

The above statements are sworn to under the penalty of perjury.

Printed Name: Jared Burkett

Signature: _____

Title: Vice President

Company Name: Harbel, Inc.

Date: 5/23/2024

STATE OF ~~WEST VIRGINIA~~ MARYLAND,

COUNTY OF ALLEGANY, TO-WIT:

Taken, subscribed and sworn to before me this 23rd day of May, 2024.

By Commission expires May 8, 2027

(Seal)

_____
(Notary Public) Jennifer L. Wilson

Rev. July 7, 2017

CONTRACTOR LICENSE

AUTHORIZED BY THE

West Virginia Contractor Licensing Board

NUMBER: WV000349

CLASSIFICATION:

GENERAL BUILDING
GENERAL ENGINEERING
MULTIFAMILY
MASONRY
SPECIALTY
ROOFING

HARBEL INC
DBA HARBEL INC
PO BOX 358
CUMBERLAND, MD 21501-0358

DATE ISSUED	EXPIRATION DATE
AUGUST 02, 2023	AUGUST 02, 2024

Authorized Signature

Chair, West Virginia Contractor Licensing Board

WEST VIRGINIA CONTRACTOR LICENSING BOARD

A copy of this license must be readily available for inspection by the Board on every job site where contracting work is being performed. This license number must appear in all advertisements, on all bid submissions, and on all fully executed and binding contracts. This license is non-transferable. This license is being issued under the provisions of West Virginia Code, Chapter 30, Article 42.

EXHIBIT B – PROJECT PLANS

13. GENERAL REQUIREMENTS:

13.1 **Mandatory Contract Item Requirements:** Contract Item must meet or exceed the mandatory requirements listed below.

13.1.1 All work to be performed according to specifications provided in the following attachments.

13.1.1.1 Exhibit A Pricing Page
13.1.1.2 Exhibit C Scope of Work Camp Dawson Chalet(s) Deck Replacement Construction
13.1.1.3 Exhibit D Chalet Deck Replacement Drawings & Plans

14. PERFORMANCE: Vendor and Agency shall agree upon a schedule for performance of Contract Services and Contract Services Deliverables, unless such a schedule is already included herein by Agency.

15. TRAVEL: Vendor shall be responsible for all mileage and travel costs, including travel time, associated with performance of this Contract. Any anticipated mileage or travel costs may be included in the Vendor's bid, but such costs will not be paid by the Agency separately.

16. PROJECT SPECIFIC CONDITIONS OF THE WORK

16.1 Limits of Work

16.1.1 Work areas will be limited to those spaces required for access to the jobsites.

16.1.2 Some interior space may be utilized for temporary (overnight) storage of equipment and tools. Coordinate storage needs with the Agency Project Manager. Vendor shall take full responsibility for the storage of any supplies or equipment on the jobsite, whether inside or outside. Agency cannot guarantee availability of its employees during off-hours (evenings, holidays, weekends, etc) to provide access to any supplies and equipment stored inside.

16.1.3 Agency facilities shall remain in use during this contract. Contractor shall work with the Trades Specialist to coordinate the temporary access to work areas and otherwise provide for the Contractor needs to complete work. Contractor shall minimize disruption to building work areas and loading dock access.

Contractor shall be permitted reasonable use of building utilities including power, water and sanitary sewage disposal as required for conducting the work. Contractor shall coordinate the location of service connections or use of receptacles with the Trades Specialist to avoid overloading existing circuits.

16.2 Contractor Visitor Badges

Contractor shall provide a list of all personnel working on this project within the facility. This list shall include a copy of a valid driver's license or other legal identification and include date of birth and cell phone number. Workers shall carry valid Contractor Photo ID Badges to be worn when working in the facility. Under no circumstances shall a worker be assigned to this project without the validation first being submitted to the WV Army National Guard and approval given.

16.3 Work Restrictions

Access to the buildings shall be coordinated with the Owner. Contractor shall not leave open doors unattended and shall close doors when not in use.

These are non-smoking buildings. Smoking is not permitted within the buildings or near entrances, operable windows or outdoor air intakes.

Vendor MAY NOT block access to any fire hydrant located at jobsite.

Vendor MAY NOT block access to parking lot entrances and exits without prior approval of the Agency.

16.4 Parking

Some parking is available on the project sites. Parking in non-designated areas is not permitted. Parking is the responsibility of the contractor. With prior approval, contractor's vehicles may be brought on-site for loading & unloading or to provide equipment necessary for conducting the work.

Use of loading dock areas or sidewalk areas for parking is strictly prohibited.

16.5 Codes

All work is to be performed in compliance with applicable Federal and State codes including but not limited to the International Building Code, International Mechanical Code, Life Safety Code, NEC, OSHA, UL, ANSI, ASME and related standards.

16.6 Safety

All applicable local safety and OSHA rules and guidelines shall be met by the Contractor. Work shall be subject to verification and inspection by WV Army National Guard Safety representatives. Such verification shall not relieve the Contractor from meeting all applicable safety regulations and inspection by other agencies.

16.7 Hot Work Permit

Contractor shall obtain Owner's permission prior to performing any work that requires an open flame, creates sparks, use's equipment that creates combustible temperatures, or performs any work that could result in a fire hazard. Owner will review work area and issue a 'Hot Work Permit' prior to Contractor commencing work. Note that the Contractor must take proper precautions and may be required to provide a Fire Watch as a condition of the permit.

16.8 Workmanship

Contractor shall complete all work in a neat and workmanlike manner. All work shall be done using new materials in a manner that meets commercial quality standards. Work shall be neat, true, plumb and square, as applicable. Contractor shall verify all dimensions.

EXHIBIT C-SCOPE OF WORK -WEST VIRGINIA ARMY NATIONAL GUARD
CAMP DAWSON, KINGWOOD WV
CHALET DECK REPLACEMENTS
MAY 2024

Division 1 - General Requirements

01100 Summary

The purpose of this scope of work is to replace the decks of the three (3) chalets on the Camp Dawson Training Site located near Kingwood, WV. The existing decks have aged and need replacement.

The objectives for this project are as follows:

- **Demolition of Existing Decks**
- **New Foundation Construction**
- **Construction of New Decks**

01300 Administrative Requirements

PROJECT COORDINATION

- Coordinate construction activities included in Contract Documents to assure efficient and orderly installation of each part of the Work.
- Coordinate construction operations that are dependent upon each other for proper installation, connection, and operation.
- Where installation of one part of the Work is dependent on installation of other components, either before or after its own installation, schedule construction activities in sequence required to obtain best results.
- Where availability of space is limited, coordinate installation of different components to assure maximum accessibility for required maintenance, service, and repair.
- Make adequate provisions to accommodate items scheduled for later installation.
- Where necessary prepare memoranda for distribution to each party involved outlining special procedures required for coordination. Include such items as required notices, reports, and attendance at meetings. Prepare similar memoranda for Owner and separate Contractors where coordination of their Work is required.

ADMINISTRATIVE PROCEDURES

- Coordinate scheduling and timing of required administrative procedures with other construction activities to avoid conflicts and ensure orderly progress of the Work. Such administrative activities include, but are not limited to:
    - Preparing of schedules.
    - Installing and removing temporary facilities.
    - Delivering and processing submittals.
    - Progress meetings.
    - Project Close-out activities.

CONSERVATION

- Coordinate construction activities to ensure that operations are carried out with consideration given to conservation of energy, water, and materials.

PROGRESS MEETINGS

- Contractor will conduct progress meetings at site agreed upon by the Project Manager at regularly scheduled intervals, generally bi-weekly.
- Progress meeting minutes are to be provided by the contractor within 3 business day of conclusion of the meeting. The meeting minutes shall be approved at the next meeting.
- The progress agenda shall include:
    - Review and correct or approve minutes of previous progress meeting.
    - Review and discuss old business
    - Review and discuss new business
    - Review and discuss contractor's issues and concerns
    - Review and discuss owner's issues and concerns
    - Review and discuss progress since last meeting.
    - Review where each activity is in relation to Contractor's Construction Schedule, whether on time or ahead or behind schedule, will be determined.
    - Contractor to present a new updated schedule at each progress meeting; to include a two week look ahead.

- Contractor shall provide meeting minutes of each progress meeting within three days after each progress meeting date. Contractor will distribute copies of minutes of meeting to the Project Manager.

GENERAL RESPONSIBILITIES

- The successful contractor is responsible for providing all parts, labor, equipment, and materials required to provide a finished fully functional product as described in the objectives.
- The contractor is responsible for the cost, and obtaining of all required permits.
- The contactor is responsible to ensure all work is in compliance with all Federal, State, Local Municipalities, State Fire Marshall and ATFP requirements.
- Contractor is responsible for all permits; the contractor shall obtain all required permits prior to initiation of any work. The contractor shall be responsible for the associated costs or permitting.
- Contractor is responsible for field verifying all distances and quantities of materials and components necessary for completion.
- The contractor is responsible for cleaning up the work site and repairing the site to original conditions once work is completed.
- Contractor responsible for keeping the work site clean daily, free from excess debris and safety hazards.
- Contractor responsible for providing waste disposal for the project; contractor is responsible for removing all construction waste debris off site at the contractor's expense.
- Any and all testing is to be performed at the contractor's expense.
- All materials and colors shall be submitted and approved by the WVARNG prior to installation.
- The successful contractor will be required to provide Camp Dawson staff with training on the operation and maintenance on any new systems at project completion.
- The West Virginia Army National Guard reserves the right to claim removed equipment from the project. A list of equipment to be retained will be provided to the contractor prior to beginning work. Contractor to make every effort to remove these items without damage.
- All design-build projects shall include specifications and drawings for submittal packages.
- Contractor is responsible for providing any Operation and Maintenance Manuals, design drawings, and documentation certifying the systems completion and operation.
- The contractor will provide a schedule of values broken down per line item with material and labor.
- Owner has 7 business days to review and respond to Requests For Information (RFI)s.
- Owner has 14 business days to review and respond to contract submittals.
- Owner has 14 business days to review and respond to review drawings.

SITE ACCESS REQUIREMENTS

- Access and general protection/security policy and procedures. This standard language is for contractor employees with an area of performance within Army controlled installation, facility, or area. Contractor and all associated sub-contractors employees shall provide all information required for background checks to meet installation access requirements to be accomplished by installation Provost Marshal Office, Director of Emergency Services or Security Office. Contractor workforce must comply with all personal identity verification requirements (FAR clause 52.204-9, Personal Identity Verification of Contractor Personnel) as directed by DOD, HQDA and/or local policy. In addition to the changes otherwise authorized by the changes clause of this contract,

should the Force Protection Condition (FPCON) at any individual facility or installation change, the Government may require changes in contractor security matters or processes.

- For contractors that do not require CAC, but require access to a DoD facility or installation. Contactor and all associated sub-contractors employees shall comply with adjudication standards and procedures using the National Crime Information Center Interstate Identification Index (NICI-III) and Terrorist Screening Database (TSDB) (Army Directive 2014-05/AR 190-13), applicable installation, facility and area commander installation/facility access and local security policies and procedures (provided by government representative), or, at OCONUS locations, in accordance with status of forces agreements and other theater regulations.

- Contractor is responsible for coordinating with the Project Manager at Camp Dawson, for access and deliveries to Camp Dawson. The Project Manager requires two (2) business days' notice to approve access to Camp Dawson. Failure to give adequate notice may result in deliveries or sub-contractors being refused access to Camp Dawson and a Non Compliance Notice (NCN). Contractor shall be responsible for any rescheduling costs occurs due to noncompliance.

01400 Quality Requirements

- The successful contractor will be required to provide a one year warranty on all parts, labor and materials on the entire project.
- No hardware, devices, or conversion software or hardware will be accepted that has been on the market for less than 5 years; all devices require the approval of the WVARNG.

01500 Temporary Facilities and Controls

- The successful contractor will be required to provide their own temporary facilities. The West Virginia Army National Guard will provide an area for the contractor to have a lay down area, and a place for a job trailer.
- The West Virginia Army National Guard will make every effort to provide electric and water for the contractor's lay down and job trailer site; however it is not guaranteed.

01700 Execution Requirements

- Within 30 days of the government Final Acceptance of the project; the contractor shall be responsible to provide any and all field notes, as-built drawings, or any other associated records to the Project Manager.

SCOPE:

Chalet Deck Replacements

- Contractor is responsible for demolition of three (3) existing chalet decks
    - All demolished materials to be removed by contractor
- Contractor is responsible for construction of three (3) new chalet decks per drawings located in Exhibit D-Appendix A

APPENDIX A - New Deck Drawings

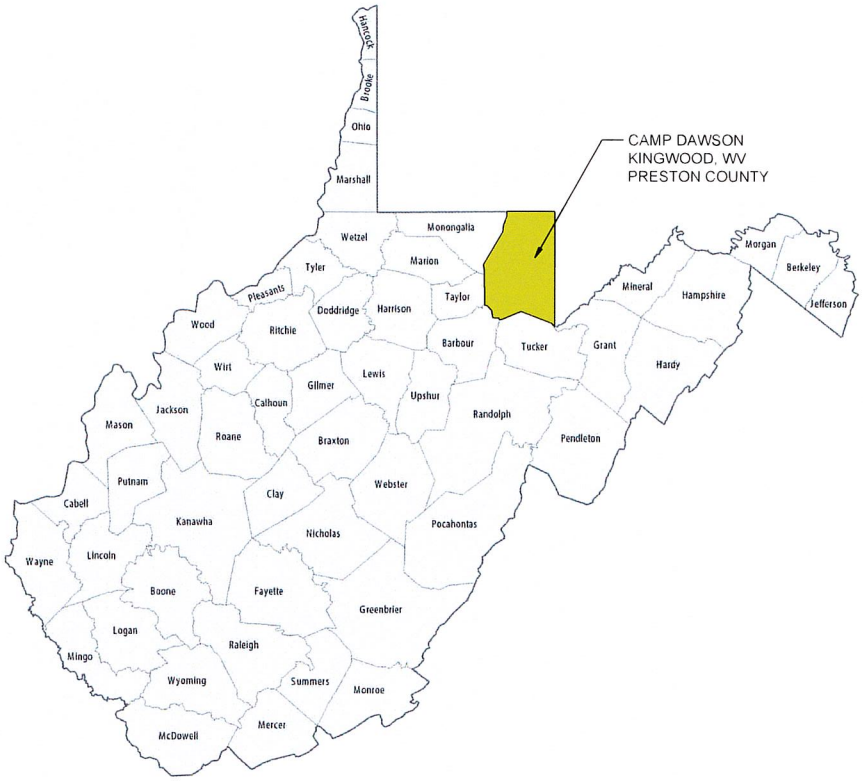

WEST VIRGINIA ARMY NATIONAL GUARD
CONSTRUCTION AND FACILITIES
MANAGEMENT OFFICE

CAMP DAWSON
CHALET DECK REPLACEMENT
2024

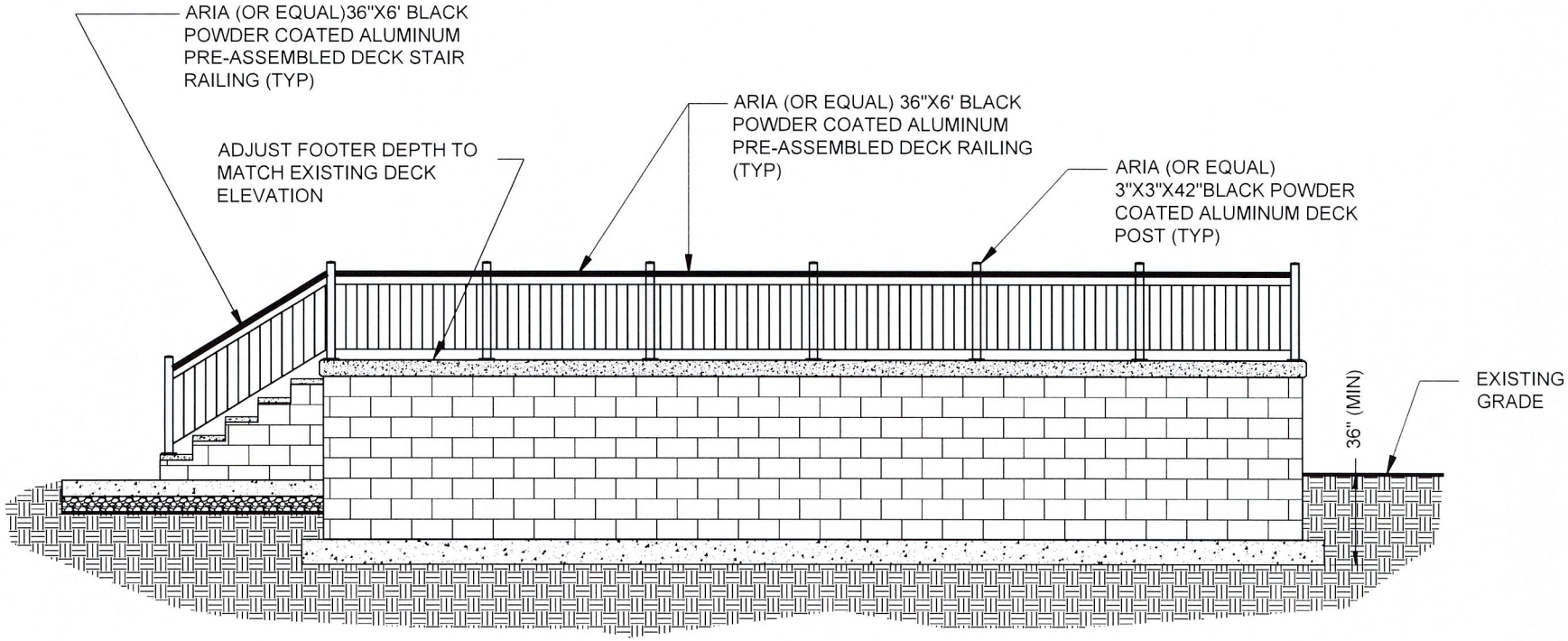

SCALE = NTS

WEST VIRGINIA ARMY NATIONAL GUARD
CHALET DECK

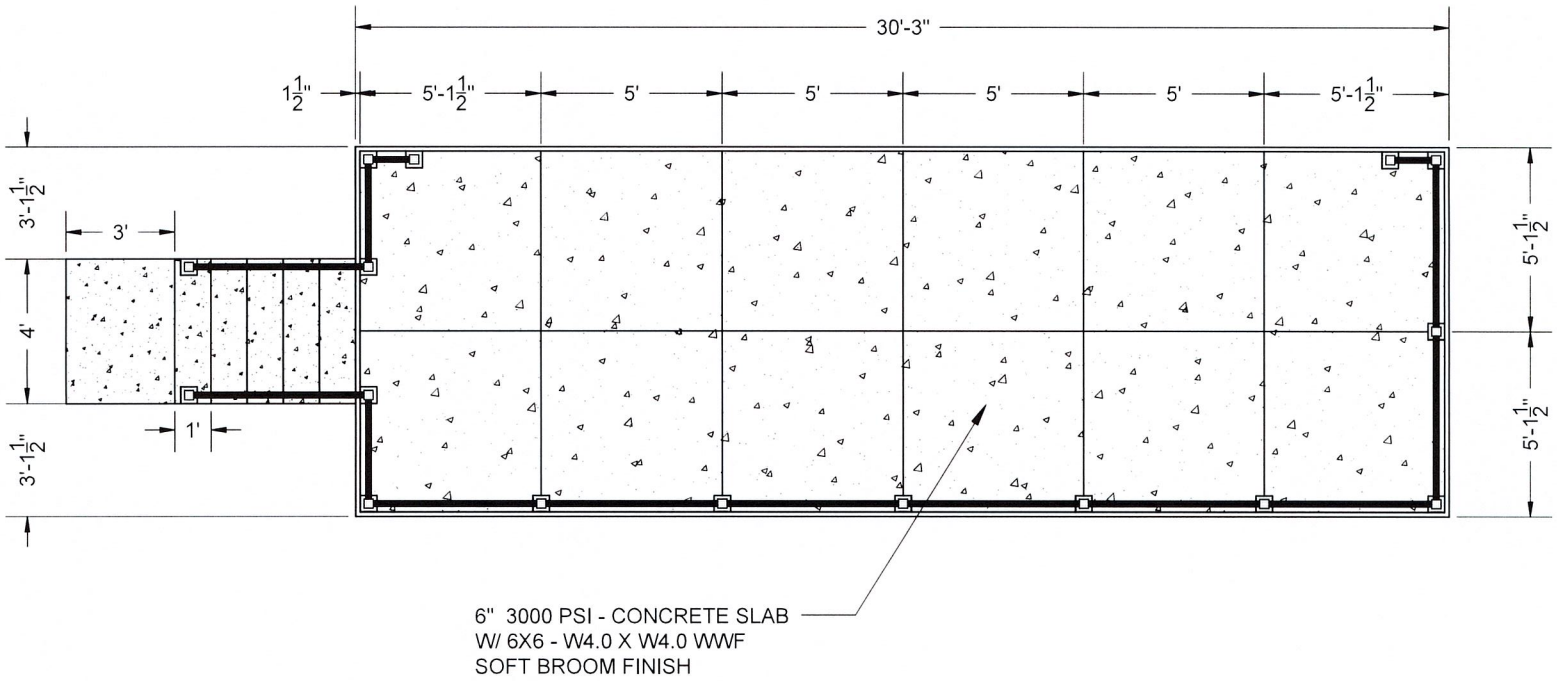

SCALE = NTS

WEST VIRGINIA ARMY NATIONAL GUARD
CHALET DECK

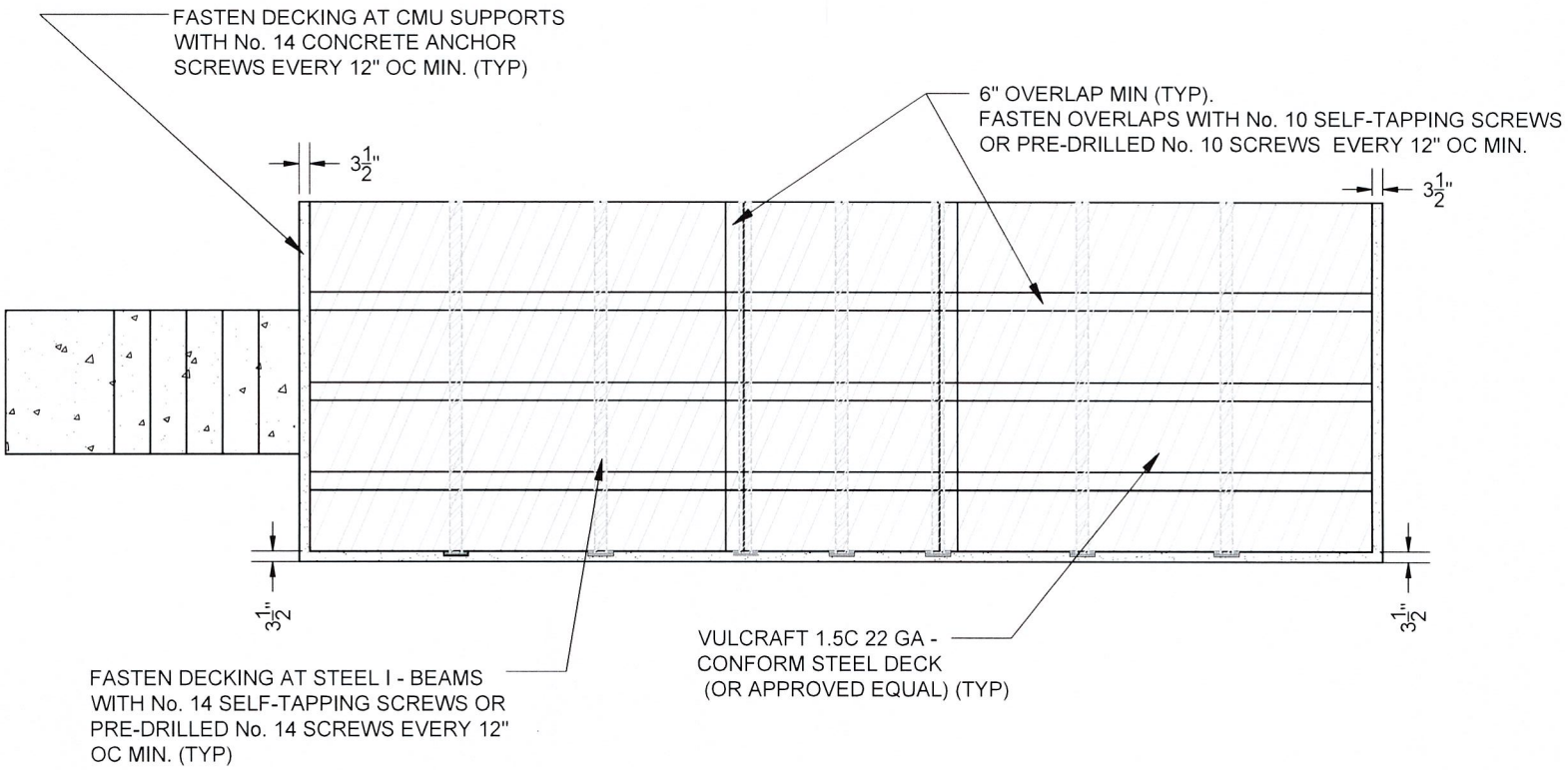

SCALE = NTS

WEST VIRGINIA ARMY NATIONAL GUARD
CHALET DECK

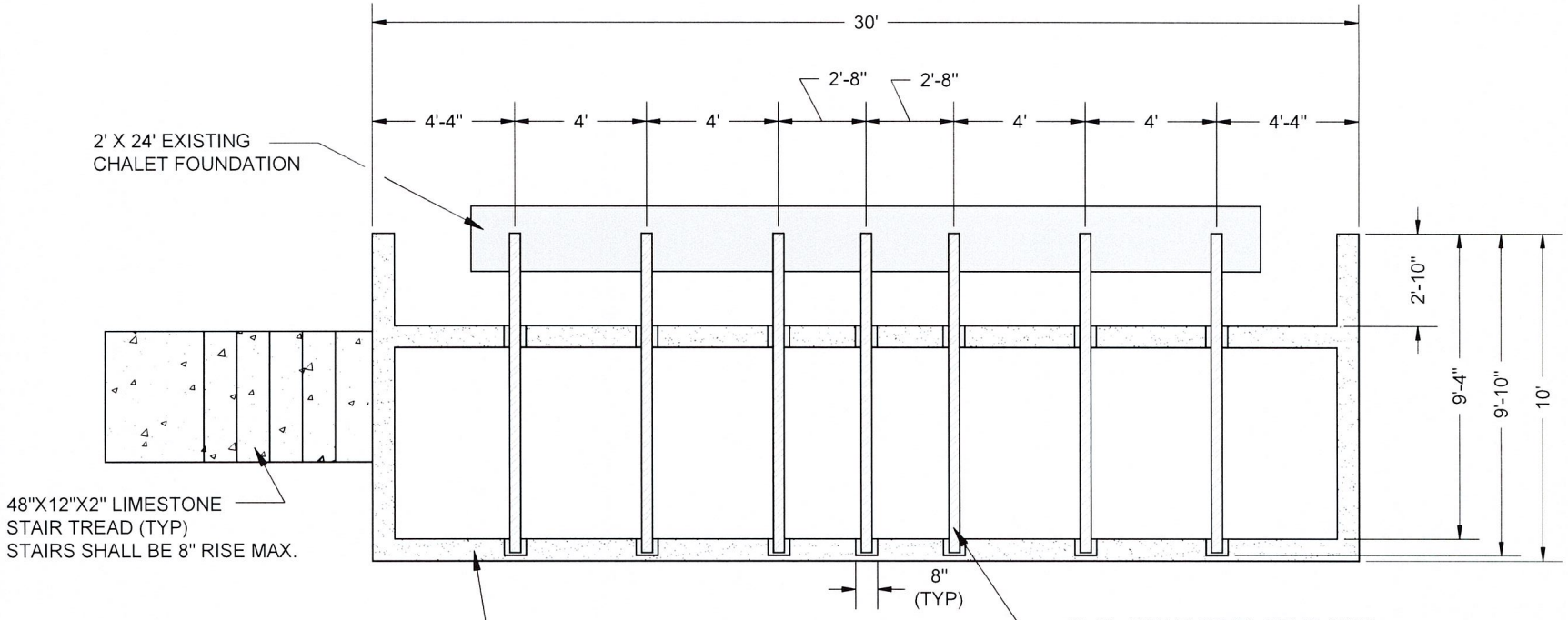

SCALE = NTS

WEST VIRGINIA ARMY NATIONAL GUARD
CHALET DECK

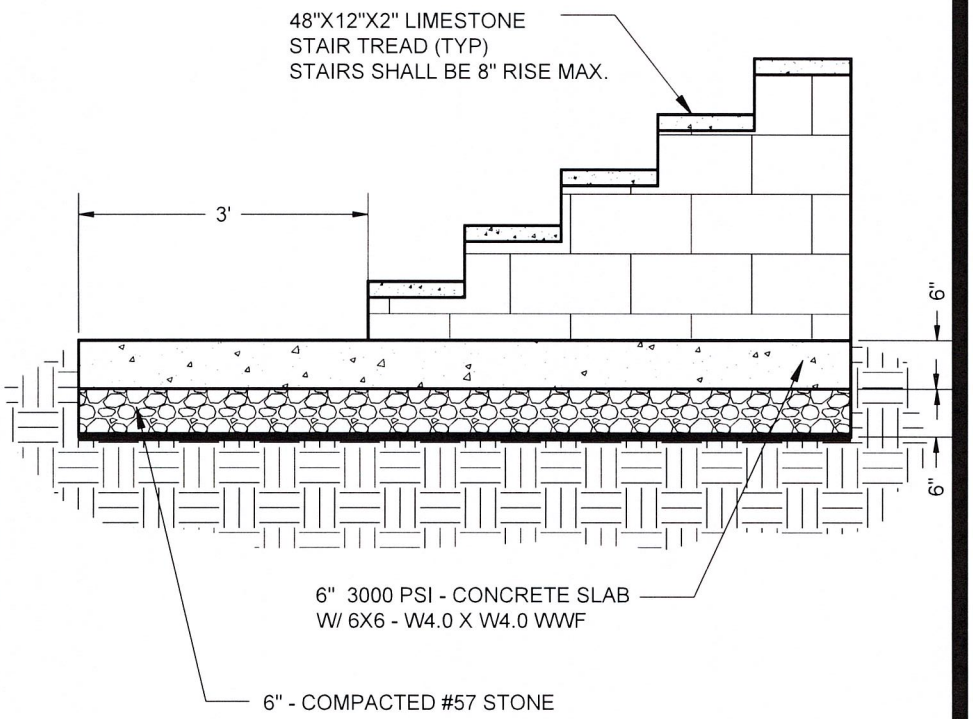

STAIR DETAIL

SCALE = NTS

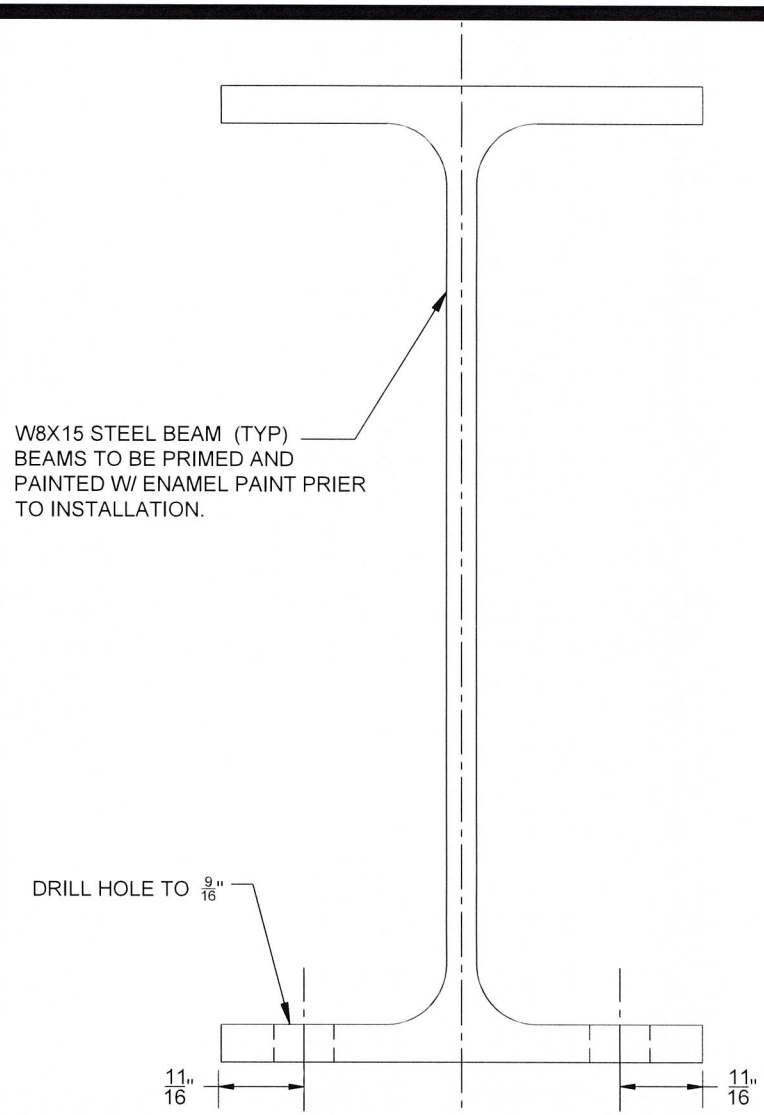

WEST VIRGINIA ARMY NATIONAL GUARD
CHALET DECK

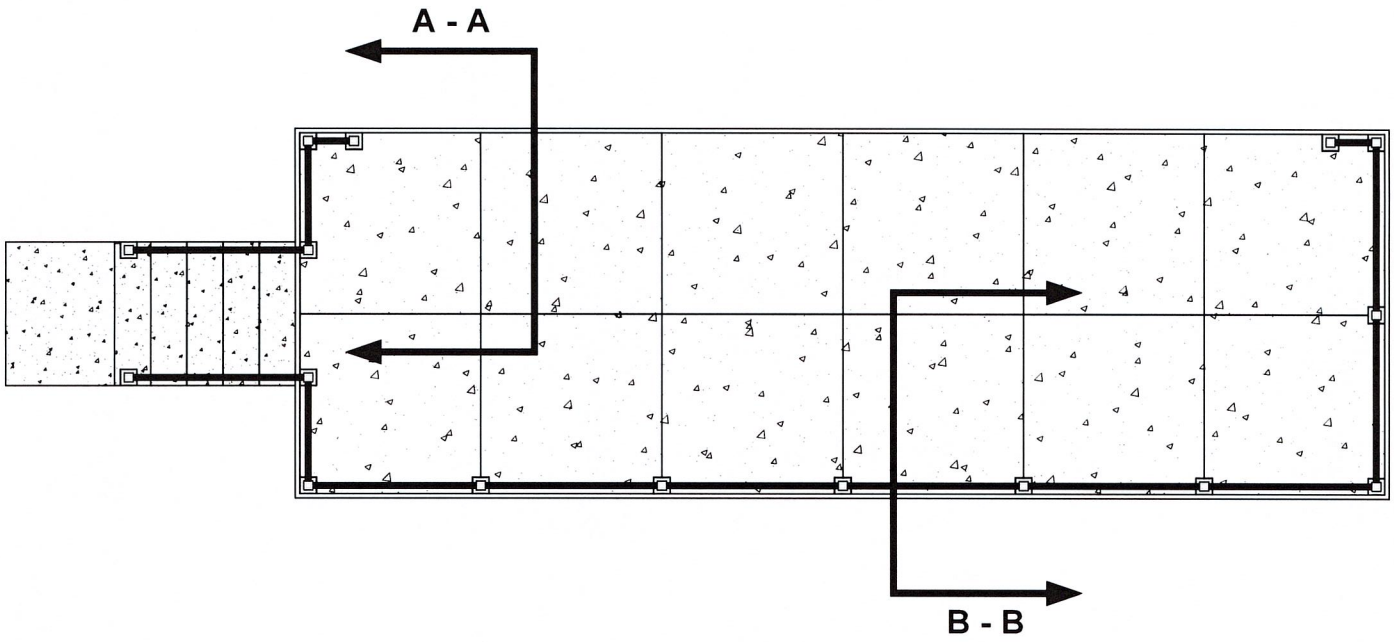

SECTIONS

SCALE = NTS

WEST VIRGINIA ARMY NATIONAL GUARD
CHALET DECK

SECTION A - A

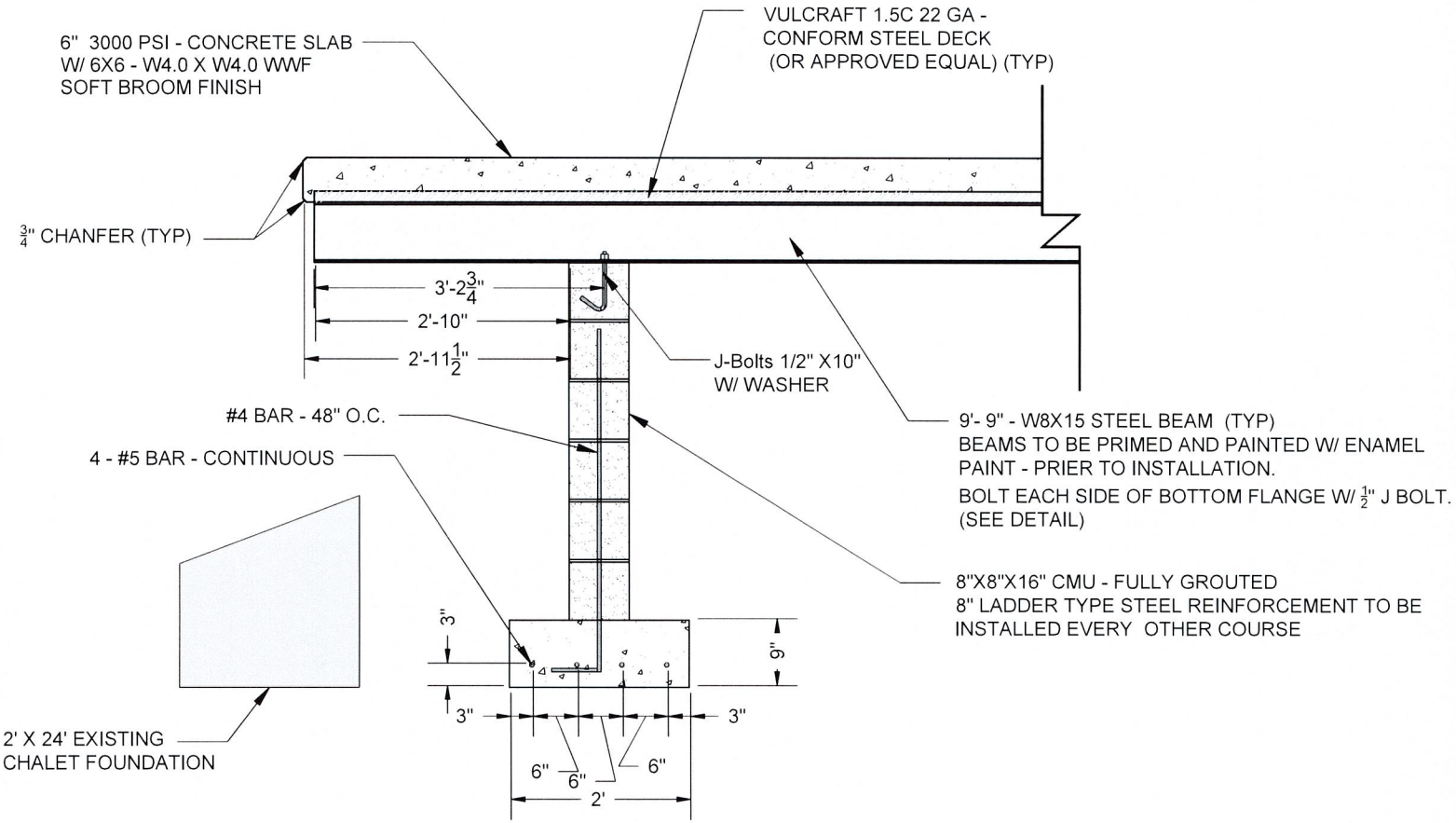

SCALE = NTS

WEST VIRGINIA ARMY NATIONAL GUARD
CHALET DECK

SECTION B - B

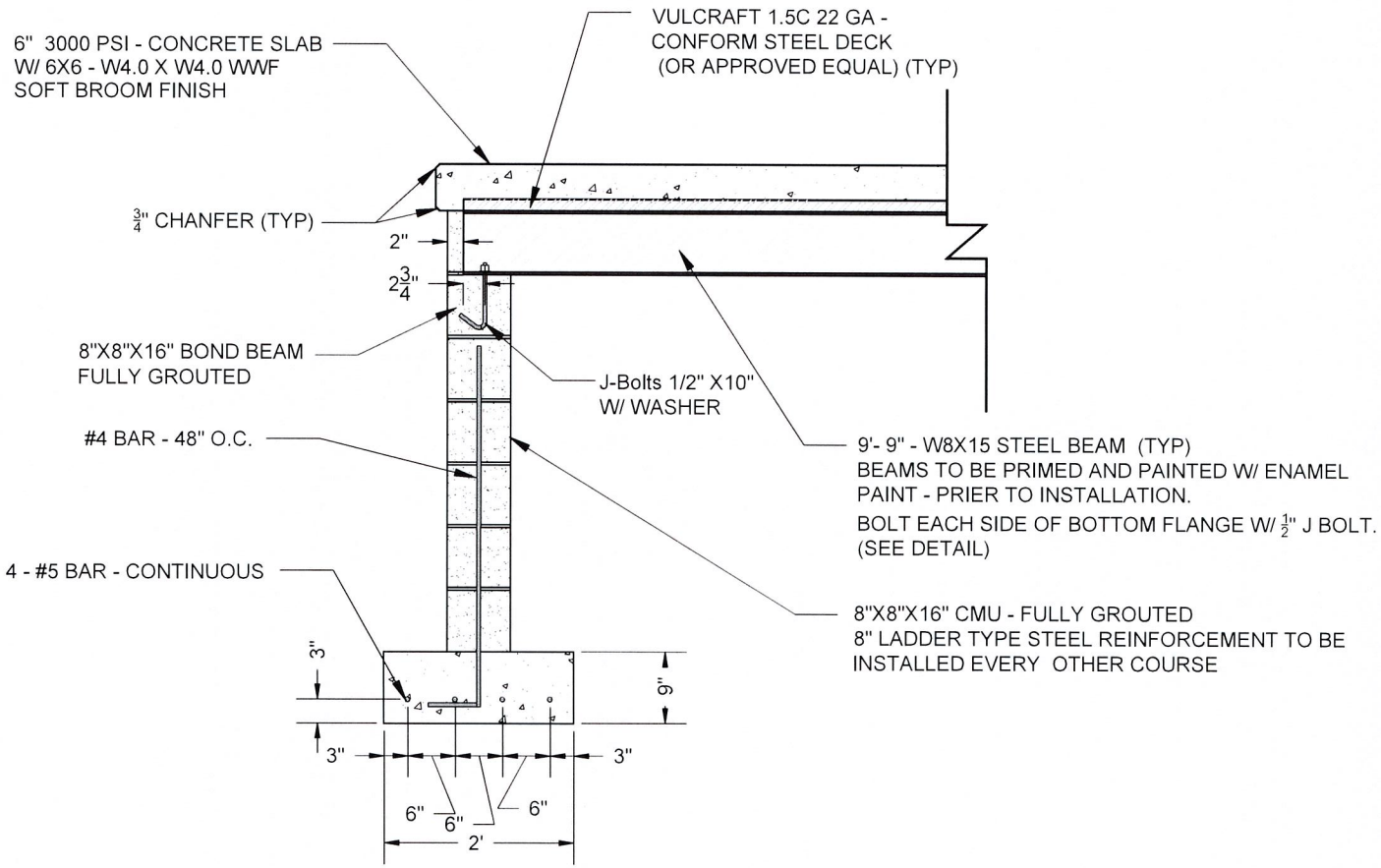

SCALE = NTS

WEST VIRGINIA ARMY NATIONAL GUARD
CHALET DECK