The following documentation is an electronically-submitted vendor response to an advertised solicitation from the *West Virginia Purchasing Bulletin* within the Vendor Self-Service portal at ***wvOASIS.gov***. As part of the State of West Virginia's procurement process, and to maintain the transparency of the bid-opening process, this documentation submitted online is publicly posted by the West Virginia Purchasing Division at ***WVPurchasing.gov*** with any other vendor responses to this solicitation submitted to the Purchasing Division in hard copy format.

WVOASIS

Jump to: FORMS Go | Home | Personalize | Accessibility | App Help | About

Welcome, Lu Anne Cottrill

Procurement | Budgeting | Accounts Receivable | Accounts Payable

Solicitation Response(SR) Dept: 0210 ID: ESR04061700000004822 Ver.: 1 Function: New Phase: Final

Modified by batch , 04/06/2017

Header 3

List View

General Information | Contact | Default Values | Discount | Document Information

Procurement Folder: 304308

Procurement Type: Central Master Agreement

Vendor ID: 000000200562

Legal Name: STATE ELECTRIC SUPPLY COMPANY

Alias/DBA:

Total Bid: $0.00

Response Date: 04/06/2017

Response Time: 10:08

SO Doc Code: CRFQ

SO Dept: 0210

SO Doc ID: ISC1700000019

Published Date: 3/30/17

Close Date: 4/6/17

Close Time: 13:30

Status: Closed

Solicitation Description: Addendum #4 Computer Data Cable & Fittings

Total of Header Attachments: 3

Total of All Attachments: 3

Purchasing Division
2019 Washington Street East
Post Office Box 50130
Charleston, WV 25305-0130

State of West Virginia
Solicitation Response

Proc Folder : 304308

Solicitation Description : Addendum #4 Computer Data Cable & Fittings

Proc Type : Central Master Agreement

Date issued	Solicitation Closes	Solicitation Response	Version
	2017-04-06 13:30:00	SR 0210 ESR04061700000004822	1

VENDOR

000000200562

STATE ELECTRIC SUPPLY COMPANY

Solicitation Number: CRFQ 0210 ISC1700000019

Total Bid : $0.00 **Response Date:** 2017-04-06 **Response Time:** 10:08:31

Comments:

FOR INFORMATION CONTACT THE BUYER

Stephanie L Gale

(304) 558-8801
stephanie.l.gale@wv.gov

Signature on File **FEIN #** **DATE**

All offers subject to all terms and conditions contained in this solicitation

Line	Comm Ln Desc	Qty	Unit Issue	Unit Price	Ln Total Or Contract Amount
1	E-Catalog	0.00000	LS	$277,999.020000	$0.00

Comm Code	Manufacturer	Specification	Model #
26121634			

Extended Description : E-Catalog

VENDOR CUSTOMER CODE	SUPPLIER PART NUMBER	SUPPLIER NAME	MANUFACTURER NAME	MANUFACTURER PART NUMBER	COMMODITY CODE	ITEM DESCRIPTION	EXTENDED DESCRIPTION	UNIT OF MEASURE	LIST PRICE	ESTIMATED QUANTITY	EXTENDED PRICING	DELIVERY DAYS	PRODUCT/ CATEGORY	MODEL	DRAWING	PIECE	SERIAL NUMBER	SPECIFICATION	SIZE	COLOR	PICTURE FILE NAME
000000200562	3-MCT8NT50-C	State Electric Supply	3-M	CT8NT50-C	26121634	PLASTIC CABLE TIES; 7 15/16" IN LENGTH, 100PK 3-M PART # 3-M06226 OR EQUAL		PK	$2.00	100	$200.00		N/A	N/A	N/A	N/A	N/A	N/A	N/A	N/A	N/A
000000200563	CADCAT32HP	State Electric Supply	Caddy	CAT32HP	26121634	CABLE SUPPORT J-HOOK; ERICO PART # CAT32 OR EQUAL		EA	$1.80	250	$450.00		N/A	N/A	N/A	N/A	N/A	N/A	N/A	N/A	N/A
000000200564	3-M88-SUPER-3/4X66FT	State Electric Supply	3-M	88-SUPER-3/4X66FT	26121634	ELECTRICAL TAPE; 3-M SCOTCH SUPER 88 3M PART # 88-SUPER-3/4" X 66FT OR EQUAL		EA	$4.00	100	$400.00		N/A	N/A	N/A	N/A	N/A	N/A	N/A	N/A	N/A
000000200565	3-MMP+1.4X11	State Electric Supply	3-M	MP+1.4X11	26121634	3M MOLDABLE PUTTY STIX PART # 3M-MPS-2+ OR EQUAL		EA	$14.25	10	$142.50		N/A	N/A	N/A	N/A	N/A	N/A	N/A	N/A	N/A
000000200566	ARTLV1	State Electric Supply	Arlington	LV1	26121634	SINGLE GANG LOW VOLTAGE MOUNTING BRACKETS; ARLINGTON PART # LV-1 OR EQUAL		EA	$0.90	250	$225.00		N/A	N/A	N/A	N/A	N/A	N/A	N/A	N/A	N/A
000000200567	VEL189645	State Electric Supply	Velcro	189645	26121634	3/4"W X 25YDS LONG BLACK VELCRO IN A ROLL VELCRO PART# 189645 OR EQUAL		EA	$20.00	30	$600.00										
000000200568	3-MSTD-0-9-(FILLED)	State Electric Supply	3-M	STD-0-9-(FILLED)	26121634	WIRE MARKER DISPENSER 0 THRU 9 ON A ROLL 3-M PART # STD-0-9 (FILLED) OR EQUAL		EA	$29.00	10	$290.00		N/A	N/A	N/A	N/A	N/A	N/A	N/A	N/A	N/A
000000200569	3-MSDR-0	State Electric Supply	3-M	SDR-0	26121634	WIREMARKER NUMBER REFILL FOR STD-0-9 NUMBER 0 PART# SDR-0 OR EQUAL		EA	$1.85	30	$55.50		N/A	N/A	N/A	N/A	N/A	N/A	N/A	N/A	N/A
000000200570	3-MSDR-1	State Electric Supply	3-M	SDR-1	26121634	WIREMARKER NUMBER REFILL FOR STD-0-9 NUMBER 1 PART# SDR-1 OR EQUAL		EA	$1.85	30	$55.50		N/A	N/A	N/A	N/A	N/A	N/A	N/A	N/A	N/A
000000200571	3-MSDR-2	State Electric Supply	3-M	SDR-2	26121634	WIREMARKER NUMBER REFILL FOR STD-0-9 NUMBER 2 PART# SDR-2 OR EQUAL		EA	$1.85	30	$55.50		N/A	N/A	N/A	N/A	N/A	N/A	N/A	N/A	N/A
000000200572	3-MSDR-3	State Electric Supply	3-M	SDR-3	26121634	WIREMARKER NUMBER REFILL FOR STD-0-9 NUMBER 3 PART# SDR-3 OR EQUAL		EA	$1.85	30	$55.50		N/A	N/A	N/A	N/A	N/A	N/A	N/A	N/A	N/A
000000200573	3-MSDR-4	State Electric Supply	3-M	SDR-4	26121634	WIREMARKER NUMBER REFILL FOR STD-0-9 NUMBER 4 PART# SDR-4 OR EQUAL		EA	$1.85	30	$55.50		N/A	N/A	N/A	N/A	N/A	N/A	N/A	N/A	N/A
000000200574	3-MSDR-5	State Electric Supply	3-M	SDR-5	26121634	WIREMARKER NUMBER REFILL FOR STD-0-9 NUMBER 5 PART# SDR-5 OR EQUAL		EA	$1.85	30	$55.50		N/A	N/A	N/A	N/A	N/A	N/A	N/A	N/A	N/A
000000200575	3-MSDR-6	State Electric Supply	3-M	SDR-6	26121634	WIREMARKER NUMBER REFILL FOR STD-0-9 NUMBER 6 PART# SDR-6 OR EQUAL		EA	$1.85	30	$55.50		N/A	N/A	N/A	N/A	N/A	N/A	N/A	N/A	N/A
000000200576	3-MSDR-7	State Electric Supply	3-M	SDR-7	26121634	WIREMARKER NUMBER REFILL FOR STD-0-9 NUMBER 7 PART# SDR-7 OR EQUAL		EA	$1.85	30	$55.50		N/A	N/A	N/A	N/A	N/A	N/A	N/A	N/A	N/A
000000200577	3-MSDR-8	State Electric Supply	3-M	SDR-8	26121634	WIREMARKER NUMBER REFILL FOR STD-0-9 NUMBER 8 PART# SDR-8 OR EQUAL		EA	$1.85	30	$55.50		N/A	N/A	N/A	N/A	N/A	N/A	N/A	N/A	N/A
000000200578	3-MSDR-9	State Electric Supply	3-M	SDR-9	26121634	WIREMARKER NUMBER REFILL FOR STD-0-9 NUMBER 9 PART# SDR-9 OR EQUAL		EA	$1.85	30	$55.50		N/A	N/A	N/A	N/A	N/A	N/A	N/A	N/A	N/A
000000200579	CPI12096-703	State Electric Supply	Chatsworth	12096-703	26121634	VERTICAL WIRE MANAGER FOR 19" OR 23" RELAY RACKS MOUNTING HARDWARE INCLUDED CHATSWORTH PART# 12096-703 OR EQUAL		EA	$310.00	5	$1,550.00		N/A	N/A	N/A	N/A	N/A	N/A	N/A	N/A	N/A
000000200580	HOFEDR19FM45U	State Electric Supply	Hoffman	EDR19FM45U	26121634	DISTRIBUTION RACKS; ALUMINUM BASE COLOR OF BLACK MUST BE APPROXIMATELY 15" IN DEPTH; APPROXIMATELY 20" IN WIDTH & 84" HEIGHT GREAT LAKES PART# GLRR-1984BA OR EQUAL		EA	$96.11	20	$1,922.20		N/A	N/A	N/A	N/A	N/A	N/A	N/A	N/A	N/A
000000200581	BELXH6M451146122, BEL	State Electric Supply	Belden	XH6M451146122, 9BF1-141001, and HVMP014201	26121634	84" NETWORKING CABINET; CABINET WILL INCLUDE THE FOLLOWING: CASTERS, LEVELERS, GROUND LUG, TWO PAIR SQUARE HOLE RAILS, M6 HARDWARE, BOTTOM GLAND, TOP GLAND, 10IN FAN TOP, PERFORATED MESH FRONT DOOR, PERFORATED MESH REAR DOOR, TWO SOLID SIDE PANELS, TWO 9411-1602 POWER STRIPS INTERNAL 8729-PD-3 FRONT, 8429-PR-3-0001 SPOTWELDED REAR TWO 8436-01-SP-3 SIDES. BELDEN PART# XDP84-3-1S0046 OR EQUAL	XH6M451146122 - Cabinet, 9BF1-141001 - PDU, and HVMP014201 - Lacing Bar	EA	$1,725.00	10	$17,250.00		N/A	N/A	N/A	N/A	N/A	N/A	N/A	N/A	N/A
000000200582	BELXH6M421146122, BEL	State Electric Supply	Belden	XH6M421146122, 9BF1-141001, and HVMP014201	26121634	72" NETWORKING CABINET; CABINET WILL INCLUDE THE FOLLOWING: CASTERS, LEVELERS, GROUND LUG, TWO PAIR SQUARE HOLE RAILS, M6 HARDWARE, BOTTOM GLAND, TOP GLAND, 10IN FAN TOP, PERFORATED MESH FRONT DOOR, PERFORATED MESH REAR DOOR, TWO SOLID SIDE PANELS, TWO 9411-1602 POWER STRIPS INTERNAL 8729-PD-3 FRONT, 8429-PR-3-0001 SPOTWELDED REAR TWO 8436-01-SP-3 SIDES. BELDEN PART# XDP72-3-1S0012 OR EQUAL	XH6M421146122 -Cabinet, 9BF1-141001 - PDU, and HVMP014201 - Lacing Bar	EA	$1,715.00	10	$17,150.00		N/A	N/A	N/A	N/A	N/A	N/A	N/A	N/A	N/A
000000200583	GLC840E-2936WVCC	State Electric Supply	Great Lakes	840E-2936WVCC	26121634	84" NETWORKING CABINET; BASE UNIT WITH LOUVERED TOP; PLEXIGLAS VENTED FRONT DOOR W/LOCK; UPPER HALF LOUVERED STEEL REAR DOOR W/LOCK; SOLID REMOVABLE SIDE PANELS; TWO PAIR 19" MOUNTING RAILS W/BRACKETS & MOUNTING SCREWS; COLOR BLACK OR GREY; 16 POSITION POWER STRIP W / CIRCUIT BREAKER & 12' CORD; CASTERS; 84"H X 29" W X 36" D; GREAT LAKES PART # 840E-2936WVCC OR EQUAL		EA	$1,825.00	10	$18,250.00		N/A	N/A	N/A	N/A	N/A	N/A	N/A	N/A	N/A
000000200584	GLC720E-2936WVCC	State Electric Supply	Great Lakes	720E-2936WVCC	26121634	72" NETWORKING CABINET; BASE UNIT WITH LOUVERED TOP; PLEXIGLAS VENTED FRONT DOOR W/LOCK; UPPER HALF LOUVERED STEEL REAR DOOR W/LOCK; PAIR OF SOLID REMOVABLE SIDE PANELS; TWO PAIR 19" MOUNTING RAILS W/BRACKETS & MOUNTING SCREWS; COLOR BLACK OR GREY; 16 POSITION POWER STRIP W / CIRCUIT BREAKER & 12' CORD; CASTERS; 72"H X 29" W X 36" D GREAT LAKES PART # 720E-2936WVCC OR EQUAL		EA	$1,575.00	10	$15,750.00		N/A	N/A	N/A	N/A	N/A	N/A	N/A	N/A	N/A
000000200585	GLC480E-2432WVCC	State Electric Supply	Great Lakes	480E-2432WVCC	26121634	48" NETWORKING CABINET; BASE UNIT WITH LOUVERED TOP; PLEXIGLAS VENTED FRONT DOOR W/LOCK; UPPER HALF LOUVERED STEEL REAR DOOR W/LOCK; PAIR OF SOLID REMOVABLE SIDE PANELS; TWO PAIR 19" MOUNTING RAILS W/BRACKETS & MOUNTING SCREWS; COLOR BLACK OR GREY; 6 POSITION POWER STRIP W / CIRCUIT BREAKER & 12' CORD; CASTERS; 48"H X 24" W X 32" D GREAT LAKES PART # 480E-2432WVCC OR EQUAL		EA	$1,025.00	5	$5,125.00		N/A	N/A	N/A	N/A	N/A	N/A	N/A	N/A	N/A
000000200586	GLC7206-FM	State Electric Supply	Great Lakes	7206-FM	26121634	STATIONARY SHELVES FOR 19" MOUNTING IN NETWORKING CABINETS; GREAT LAKES PART # 7206-FM OR EQUAL		EA	$36.00	10	$360.00		N/A	N/A	N/A	N/A	N/A	N/A	N/A	N/A	N/A
000000200587	GLCTPE-24F	State Electric Supply	Great Lakes	TPE-24F	26121634	FAN ASSEMBLY W/FAN GUARDS & THREE 75 CFM FANS FOR NETWORKING CABINETS; GREAT LAKES PART # TPE-24F OR EQUAL		EA	$42.00	10	$420.00		N/A	N/A	N/A	N/A	N/A	N/A	N/A	N/A	N/A
000000200588	W-M2700-WH	State Electric Supply	Wiremold	2700-WH	26121634	WIREMOLD MOLDING, LINE VOLTAGE, NON-METALLIC; 3/4" WIDTH; 6 FT. LENGTH; WIREMOLD PART # 2-[illegible] OR EQUAL		EA	$6.25	500	$3,125.00		N/A	N/A	N/A	N/A	N/A	N/A	N/A	N/A	N/A
000000200589	WCETEL24/25PC3P	State Electric Supply	Superior Essex	WCETEL24/25PC3P	26121634	25 PAIR PLENUM CATEGORY 3 CABLE SUPERIOR ESSEX PART# WCETEL24/25PC3P OR EQUAL		EA	$0.74	1,000	$740.00		N/A	N/A	N/A	N/A	N/A	N/A	N/A	N/A	N/A
000000200590	WCETEL24/50PC3P	State Electric Supply	Superior Essex	WCETEL24/50PC3P	26121634	50 PAIR PLENUM CATEGORY 3 CABLE SUPERIOR ESSEX PART# WCETEL24/50PC3P OR EQUAL		EA	$1.64	500	$820.00		N/A	N/A	N/A	N/A	N/A	N/A	N/A	N/A	N/A

000000200591	WCETEL24/100P3P	State Electric Supply	Superior Essex	WCETEL24/100P3P	26121634	100 PAIR PLENUM CATEGORY 3 CABLE SUPERIOR ESSEX PART# WCETEL24/100PC3P OR EQUAL		EA	$2.82	1	$2.82		N/A	N/A	N/A	N/A	N/A	N/A	N/A	N/A	N/A
000000200592	WCEM57554B	State Electric Supply	Mohawk	M57554B	26121634	CAT. 5e MIN COMPLIANT PVC CABLE; NON-PLENUM; WHITE IN COLOR; 1,000 FT. PER EASY PULL BOX; PRICE PER FOOT. MOHAWK PART # M57554 OR EQUAL		EA	$70.00	5	$350.00		N/A	N/A	N/A	N/A	N/A	N/A	N/A	N/A	N/A
000000200593	WCEM57547B	State Electric Supply	Mohawk	M57547B	26121634	CAT. 5e MIN COMPLIANT CABLE; PLENUM; WHITE IN COLOR; 1,000 FT. PER EASY PULL BOX; PRICE PER FOOT. MOHAWK PART # M57547 OR EQUAL		EA	$120.00	10	$1,200.00		N/A	N/A	N/A	N/A	N/A	N/A	N/A	N/A	N/A
000000200594	LEV5G108-RW5	State Electric Supply	Leviton	5G108-RW5	26121634	QUICK PORT 8P8C MODULAR RJ45 JACKS FOR CAT5e MIN COMPLIANT; WHITE IN COLOR BUT SELECTION OF COLORS MUST BE AVAILABLE; LEVITON PART # 5G108-RW5 OR EQUAL		EA	$2.34	500	$1,170.00										
000000200595	WCEM56167B	State Electric Supply	Mohawk	M56167B	26121634	CAT. 5E ENHANCED CABLE; NON-PLENUM RISER RATED; EASY PULL BOX ONLY; 1000 FT. PER BOX; SELECTION OF COLORS MUST BE AVAILABLE FOR OUTER JACKET; ELECTRICAL CHARACTERISTICS / SPECIFICATIONS SHEET MUST BE SUPPLIED. PRICE PER FOOT. MEGALAN 400 MOHAWK PART# M56167 OR EQUAL		EA	$80.00	5	$400.00										
000000200596	WCEM56168B	State Electric Supply	Mohawk	M56168B	26121634	CAT. 5E ENHANCED CABLE; PLENUM; EASY PULL BOX ONLY; 1000 FT. PER BOX; SELECTION OF COLORS MUST BE AVAILABLE FOR OUTER JACKET; ELECTRICAL CHARACTERISTICS / SPECIFICATIONS SHEET MUST BE SUPPLIED. PRICE PER FOOT. MEGALAN 400 MOHAWK PART# M56168 OR EQUAL		EA	$150.00	35	$5,250.00		N/A	N/A	N/A	N/A	N/A	N/A	N/A	N/A	N/A
000000200597	LEV5G110-RO5	State Electric Supply	Leviton	5G110-RO5	26121634	QUICK PORT 8P8C MODULAR RJ45 JACKS FOR CAT5E ENHANCED; ORANGE IN COLOR BUT SELECTION OF COLORS MUST BE AVAILABLE; LEVITON PART # 5G110-RO5 OR EQUAL		EA	$2.80	1,000	$2,800.00		N/A	N/A	N/A	N/A	N/A	N/A	N/A	N/A	N/A
000000200598	Q-T553-130-007	State Electric Supply	Quiktron	553-130-007	26121634	CAT 5E ENHANCED 7FT CROSSOVER CABLE RED IN COLOR QUIKTRON PART# 553-130-007 OR EQUAL		EA	$2.00	100	$200.00		N/A	N/A	N/A	N/A	N/A	N/A	N/A	N/A	N/A
000000200599	Q-T570-110-001	State Electric Supply	Quiktron	570-110-001	26121634	CAT 5E ENHANCED 350MHZ PATCH CABLES; RJ45M TO RJ45M BOOTED; NON-KEYED; 1 FOOT LENGTH; SELECTION OF COLORS SHALL BE AVAILABLE FOR OUTER JACKET QUIKTRON PART# 570-110-001 OR EQUAL		EA	$0.50	500	$250.00		N/A	N/A	N/A	N/A	N/A	N/A	N/A	N/A	N/A
000000200600	LEV6G460-03*	State Electric Supply	Leviton	5G460-03*	26121634	CAT. 5E GIGAMAX PATCH CABLES; RJ45M TO RJ45M BOOTED; NON-KEYED; 3 FOOT LENGTH; LEVITON PART# 5G460-03* (* - COLOR) OR EQUAL		EA	$1.60	200	$320.00		N/A	N/A	N/A	N/A	N/A	N/A	N/A	N/A	N/A
000000200601	LEV6G460-05*	State Electric Supply	Leviton	5G460-05*	26121634	CAT. 5E GIGAMAX PATCH CABLES; RJ45M TO RJ45M BOOTED; NON-KEYED; 5 FOOT LENGTH; LEVITON PART# 5G460-05* (* - COLOR) OR EQUAL		EA	$1.85	200	$370.00		N/A	N/A	N/A	N/A	N/A	N/A	N/A	N/A	N/A
000000200602	LEV6G460-07*	State Electric Supply	Leviton	5G460-07*	26121634	CAT. 5E GIGAMAX PATCH CABLES; RJ45M TO RJ45M BOOTED; NON-KEYED; 7 FOOT LENGTH; LEVITON PART# 5G460-07* (* - COLOR) OR EQUAL		EA	$2.05	400	$820.00		N/A	N/A	N/A	N/A	N/A	N/A	N/A	N/A	N/A
000000200603	LEV6G460-10*	State Electric Supply	Leviton	5G460-10*	26121634	CAT. 5E GIGAMAX PATCH CABLES; RJ45M TO RJ45M BOOTED; NON-KEYED; 10 FOOT LENGTH; LEVITON PART# 5G460-10* (* - COLOR) OR EQUAL		EA	$2.40	400	$960.00		N/A	N/A	N/A	N/A	N/A	N/A	N/A	N/A	N/A
000000200604	LEV6G460-15*	State Electric Supply	Leviton	LEV6G460-15	26121634	CAT. 5E GIGAMAX PATCH CABLES; RJ45M TO RJ45M BOOTED; NON-KEYED; 15 FOOT LENGTH; LEVITON PART# 5G460-15* (* - COLOR) OR EQUAL		EA	$3.20	200	$640.00		N/A	N/A	N/A	N/A	N/A	N/A	N/A	N/A	N/A
000000200605	Q-T551-XXX-025	State Electric Supply	Quiktron	551-XXX-025	26121634	CAT. 5E ENHANCED 350MHZ PATCH CABLES; RJ45M TO RJ45M BOOTED; NON-KEYED; 25 FOOT LENGTH; SELECTION OF COLORS SHALL BE AVAILABLE FOR OUTER JACKET QUIKTRON PART # 551-XXX-025 OR EQUAL (XXX=COLOR)		EA	$4.35	200	$870.00		N/A	N/A	N/A	N/A	N/A	N/A	N/A	N/A	N/A
000000200606	Q-T551-XXX-050	State Electric Supply	Quiktron	551-XXX-050	26121634	CAT 5E ENHANCED 350MHZ PATCH CABLES; RJ45M TO RJ45M BOOTED; NON-KEYED; 50 FOOT LENGTH; SELECTION OF COLORS SHALL BE AVAILABLE FOR OUTER JACKET QUIKTRON PART# 551-XXX-050 OR EQUAL (XXX=COLOR)		EA	$6.45	100	$645.00		N/A	N/A	N/A	N/A	N/A	N/A	N/A	N/A	N/A
000000200607	Q-T551-XXX-100	State Electric Supply	Quiktron	551-XXX-100	26121634	CAT. 5E ENHANCED 350MHZ PATCH CABLES; RJ45M TO RJ45M BOOTED; NON-KEYED; 100 FOOT LENGTH; SELECTION OF COLORS SHALL BE AVAILABLE FOR OUTER JACKET QUIKTRON PART# 551-XXX-100 OR EQUAL (XXX=COLOR)		EA	$11.00	100	$1,100.00										
000000200608	LEV49255-H48	State Electric Supply	Leviton	49255-H48	26121634	QUICK PORT HIGH DENSITY 48-PORT PATCH PANEL W/CABLE MANAGEMENT BAR LEVITON PART# 49255-H48 OR EQUAL		EA	$52.00	15	$780.00		N/A	N/A	N/A	N/A	N/A	N/A	N/A	N/A	N/A
000000200609	LEV49255-H24	State Electric Supply	Leviton	49255-H24	26121634	QUICK PORT HIGH DENSITY 24-PORT PATCH PANEL W/CABLE MANAGEMENT BAR LEVITON PART# 49255-H24 OR EQUAL		EA	$38.00	15	$570.00		N/A	N/A	N/A	N/A	N/A	N/A	N/A	N/A	N/A
000000200610	LEV5G596-U48	State Electric Supply	Leviton	5G596-U48	26121634	48-PORT 8P8C RJ45 CAT.5E RACKMOUNT PATCH PANEL; MUST BE CAT5E ENHANCED CERTIFIED; LEVITON PART# 5G596-U48 OR EQUAL		EA	$160.00	40	$6,400.00		N/A	N/A	N/A	N/A	N/A	N/A	N/A	N/A	N/A
000000200611	LEV5G596-U24	State Electric Supply	Leviton	5G596-U24	26121634	24-PORT 8P8C RJ45 CAT.5E RACKMOUNT PATCH PANEL; MUST BE CAT5E ENHANCED CERTIFIED; LEVITON PART # 5G596-U24 OR EQUAL		EA	$80.00	40	$3,200.00		N/A	N/A	N/A	N/A	N/A	N/A	N/A	N/A	N/A
000000200612	LEV5G596-U89	State Electric Supply	Leviton	5G596-U89	26121634	12-PORT 8P8C RJ45 CAT5E WALL MT. PATCH PANEL; MUST BE CAT5E ENHANCED CERTIFIED; LEVITON PART # 5G596-U89 OR EQUAL		EA	$48.70	50	$2,435.00		N/A	N/A	N/A	N/A	N/A	N/A	N/A	N/A	N/A
000000200613	DATHPM-2	State Electric Supply	Middle Atlantic	HPM-2	26121634	2-POSITION HINGED FIXED BRACKETS FOR WALL; DATATEL PART # HPM-2 OR EQUAL		EA	$29.00	20	$580.00		N/A	N/A	N/A	N/A	N/A	N/A	N/A	N/A	N/A
000000200614	DATHCM-1D	State Electric Supply	Middle Atlantic	HCM-1D	26121634	WIRE MANAGER; STANDARD INTERBAY CORD MANAGER; DATATEL PART # HCM-1D OR EQUAL		EA	$21.00	50	$1,050.00		N/A	N/A	N/A	N/A	N/A	N/A	N/A	N/A	N/A
000000200615	WCEM57202B	State Electric Supply	Mohawk	M57202B	26121634	CAT 6 ENHANCED CABLE; NON-PLENUM; EASY PULL BOX ONLY; 1,000 FT. PER BOX; SELECTION OF COLORS MUST BE AVAILABLE FOR OUTER JACKET; ELECTRICAL CHARACTERISTICS / SPECIFICATIONS SHEET MUST BE SUPPLIED. PRICE PER FOOT. CAT 6 ADVANCENET MOHAWK PART# M57202 OR EQUAL		EA	$120.00	10	$1,200.00		N/A	N/A	N/A	N/A	N/A	N/A	N/A	N/A	N/A
000000200616	WCEM57193B	State Electric Supply	Mohawk	M57193B	26121634	CAT 6 ENHANCED CABLE; PLENUM; EASY PULL BOX ONLY; 1,000 FT. PER BOX; SELECTION OF COLORS MUST BE AVAILABLE FOR OUTER JACKET; ELECTRICAL CHARACTERISTICS / SPECIFICATIONS SHEET MUST BE SUPPLIED. PRICE PER FOOT. CAT 6 ADVANCENET MOHAWK PART# M57193 OR EQUAL		EA	$250.00	50	$12,500.00		N/A	N/A	N/A	N/A	N/A	N/A	N/A	N/A	N/A
000000200617	LEV61110-RL6	State Electric Supply	Leviton	61110-RL6	26121634	QUICKPORT CAT6 EXTREME 8P8C RJ45 SNAP IN CONNECTOR; BLUE IN COLOR BUT SELECTION OF COLORS MUST BE AVAILABLE; LEVITON PART # 61110-RL6 OR EQUAL		EA	$4.18	2000	$8,360.00		N/A	N/A	N/A	N/A	N/A	N/A	N/A	N/A	N/A
000000200618	Q-T543-130-007	State Electric Supply	Quiktron	543-130-007	26121634	CAT 6 EXTREME 7FT CROSSOVER CABLE RED IN COLOR QUIKTRON PART # 538-130-007 OR EQUAL		EA	$3.00	50	$150.00		N/A	N/A	N/A	N/A	N/A	N/A	N/A	N/A	N/A

000000200619	Q-T576-XXX-001	State Electric Supply	Quikiron	Q-T576-XXX-001	26121634	CAT. 6 EXTREME 650MHZ PATCH CABLES; RJ45M TO RJ45M; NON-KEYED; 1 FOOT LENGTH; SELECTION OF COLORS SHALL BE AVAILABLE FOR OUTER JACKET QUIKTRON PART# 576-XXX-001 OR EQUAL (XXX=COLOR)		EA	$0.65	200	$130.00		N/A	N/A	N/A	N/A	N/A	N/A	N/A	N/A	N/A
000000200620	LEV62460-03*	State Electric Supply	Leviton	62460-03*	26121634	CAT. 6 EXTREME PATCH CABLES; RJ45M TO RJ45M; NON-KEYED; 3 FOOT LENGTH; LEVITON PART # 62460-03* (*-COLOR) OR EQUAL		EA	$2.45	400	$980.00		N/A	N/A	N/A	N/A	N/A	N/A	N/A	N/A	N/A
000000200621	LEV62460-05*	State Electric Supply	Leviton	62460-05*	26121634	CAT. 6 EXTREME PATCH CABLES; RJ45M TO RJ45M; NON-KEYED; 5 FOOT LENGTH; LEVITON PART # 62460-05* (*-COLOR) OR EQUAL		EA	$3.10	400	$1,240.00		N/A	N/A	N/A	N/A	N/A	N/A	N/A	N/A	N/A
000000200622	LEV62460-07*	State Electric Supply	Leviton	62460-07*	26121634	CAT. 6 EXTREME PATCH CABLES; RJ45M TO RJ45M; NON-KEYED; 7 FOOT LENGTH; LEVITON PART # 62460-07* (*-COLOR) OR EQUAL		EA	$3.75	400	$1,500.00		N/A	N/A	N/A	N/A	N/A	N/A	N/A	N/A	N/A
000000200623	LEV62460-10*	State Electric Supply	Leviton	62460-10*	26121634	CAT. 6 EXTREME PATCH CABLES; RJ45M TO RJ45M; NON-KEYED; 10 FOOT LENGTH; LEVITON PART # 62460-10* (*-COLOR) OR EQUAL		EA	$4.32	200	$864.00		N/A	N/A	N/A	N/A	N/A	N/A	N/A	N/A	N/A
000000200624	LEV62460-15*	State Electric Supply	Leviton	62460-15*	26121634	CAT. 6 EXTREME PATCH CABLES; RJ45M TO RJ45M; NON-KEYED; 15 FOOT LENGTH; LEVITON PART # 62460-15* (*-COLOR) OR EQUAL		EA	$5.45	200	$1,090.00		N/A	N/A	N/A	N/A	N/A	N/A	N/A	N/A	N/A
000000200625	LEV62460-20*	State Electric Supply	Leviton	62460-20*	26121634	CAT. 6 EXTREME PATCH CABLES; RJ45M TO RJ45M; NON-KEYED; 20 FOOT LENGTH; LEVITON PART # 62460-20* (*-COLOR) OR EQUAL		EA	$6.65	50	$332.50		N/A	N/A	N/A	N/A	N/A	N/A	N/A	N/A	N/A
000000200626	Q-T576-XXX-050	State Electric Supply	Quikiron	576-XXX-050	26121634	CAT. 6 EXTREME PATCH CABLES; RJ45M TO RJ45M; NON-KEYED; 50 FOOT LENGTH; SELECTION OF COLORS SHALL BE AVAILABLE FOR OUTER JACKET QUIKTRON PART# 576-XXX-050 OR EQUAL (XXX=COLOR)		EA	$5.75	100	$575.00		N/A	N/A	N/A	N/A	N/A	N/A	N/A	N/A	N/A
000000200627	LEV69586-U48	State Electric Supply	Leviton	69586-U48	26121634	48-PORT 8P8C RJ45 PATCH PANEL; MUST BE CAT. 6 ENHANCED CERTIFIED; LEVITON PART # 69586-U48 OR EQUAL		EA	$229.00	50	$11,450.00		N/A	N/A	N/A	N/A	N/A	N/A	N/A	N/A	N/A
000000200628	LEV69586-U24	State Electric Supply	Leviton	69586-U24	26121634	24-PORT 8P8C RJ45 PATCH PANEL; MUST BE CAT. 6 ENHANCED CERTIFIED; LEVITON PART # 69586-U24 OR EQUAL		EA	$116.00	50	$5,800.00		N/A	N/A	N/A	N/A	N/A	N/A	N/A	N/A	N/A
000000200629	LEV69586-U89	State Electric Supply	Leviton	69586-U89	26121634	12-PORT 8P8C RJ45 CAT6 WALL MT. PATCH PANEL; MUST BE CAT6 ENHANCED CERTIFIED; LEVITON PART # 69586-U89 OR EQUAL		EA	$71.00	25	$1,775.00		N/A	N/A	N/A	N/A	N/A	N/A	N/A	N/A	N/A
000000200630	LEV41089-2*P	State Electric Supply	Leviton	41089-2*P	26121634	2-PORT SURFACE MOUNT BOX; LEVITON PART # 41089-2*P (*-COLOR) OR EQUAL		EA	$1.45	1000	$1,450.00		N/A	N/A	N/A	N/A	N/A	N/A	N/A	N/A	N/A
000000200631	LEV86014	State Electric Supply	Leviton	86014	26121634	SINGLE GANG IVORY BLANK WALL PLATE; LEVITON PART# 86014 OR EQUAL		EA	$0.40	100	$40.00		N/A	N/A	N/A	N/A	N/A	N/A	N/A	N/A	N/A
000000200632	LEV88014	State Electric Supply	Leviton	88014	26121634	SINGLE GANG WHITE BLANK WALL PLATE; LEVITION PART# 88014 OR EQUAL		EA	$0.40	100	$40.00		N/A	N/A	N/A	N/A	N/A	N/A	N/A	N/A	N/A
000000200633	LEV41080-1*P	State Electric Supply	Leviton	41080-1*P	26121634	1-PORT WALLPLATES; LEVITON PART # 41080-1*P (*-COLOR) OR EQUAL		EA	$1.10	500	$550.00		N/A	N/A	N/A	N/A	N/A	N/A	N/A	N/A	N/A
000000200634	LEV41080-2*P	State Electric Supply	Leviton	41080-2*P	26121634	2-PORT WALLPLATES; LEVITON PART # 41080-2*P (*-COLOR) OR EQUAL		EA	$1.10	1000	$1,100.00										
000000200635	LEV41080-3*P	State Electric Supply	Leviton	41080-3*P	26121634	3-PORT WALLPLATES; LEVITON PART # 41080-3*P (*-COLOR) OR EQUAL		EA	$1.10	100	$110.00										
000000200636	LEV41080-4*P	State Electric Supply	Leviton	41080-4*P	26121634	4-PORT WALLPLATES; LEVITON PART # 41080-4*P (*-COLOR) OR EQUAL		EA	$1.10	100	$110.00		N/A	N/A	N/A	N/A	N/A	N/A	N/A	N/A	N/A
000000200637	LEV41080-6*P	State Electric Supply	Leviton	41080-6*P	26121634	6-PORT WALLPLATES; LEVITON PART # 41080-6*P (*-COLOR) OR EQUAL		EA	$1.10	50	$55.00		N/A	N/A	N/A	N/A	N/A	N/A	N/A	N/A	N/A
000000200638	WCEOCCDX006KWLS9OI	State Electric Supply	OCC	DX006KWLS9OP	26121634	FIBER OPTIC CABLE 6-STRAND I/O PLENUM RATED MULTIMODE 62.5/125 OCC PART # DX06-045K-WLS/900-OFNP OR CORNING PART # 006K8P-31130-29 OR EQUAL		EA	$0.50	2000	$1,000.00		N/A	N/A	N/A	N/A	N/A	N/A	N/A	N/A	N/A
000000200639	WCEOCCDX006KWLS9OI	State Electric Supply	OCC	DX006KWLS9ORI2	26121634	FIBER OPTIC CABLE 6-STRAND INDOOR/OUTDOOR ARMORED MULTIMODE 62.5/125 OCC PART # DX06-055D-WLS/900-OFCR-IAD OR CORNING PART # 006K8F-31130-A1 OR EQUAL		EA	$1.03	5000	$5,150.00		N/A	N/A	N/A	N/A	N/A	N/A	N/A	N/A	N/A
000000200640	WCEOCCDX006KWLS9OI	State Electric Supply	OCC	DX006KWLS9OPI6	26121634	FIBER OPTIC CABLE 6-STRAND INDOOR/OUTDOOR ARMORED PLENUM COATED MULTIMODE 62.5/125 OCC PART # DX06-050K-WLS/900-OFCP-IAK OR CORNING PART # 006K8P-31130-A3 OR EQUAL		EA	$2.10	2000	$4,200.00		N/A	N/A	N/A	N/A	N/A	N/A	N/A	N/A	N/A
000000200641	WCEOCCMX006AWLS9K	State Electric Supply	OCC	MX006AWLS9KAG3	26121634	FIBER OPTIC CABLE 6-STRAND OUTDOOR AERIAL W / 1/4" MESSENGER MULTIMODE 62.5/125 OCC PART # MX06-090A-WLS/900-JGS OR CORNING PART # 006KWA-T4130D20 OR EQUAL		EA	$0.96	1000	$960.00		N/A	N/A	N/A	N/A	N/A	N/A	N/A	N/A	N/A
000000200642	WCEOCCDX006DALS9OF	State Electric Supply	OCC	DX006DALS9OR	26121634	FIBER OPTIC CABLE 6-STRAND INDOOR/OUTDOOR MULTIMODE 50/125 OCC PART # DX006-055D-ALS/900-OFNR OR CORNING PART # 006C8F-31131-24 OR EQUAL		EA	$0.38	3000	$1,140.00		N/A	N/A	N/A	N/A	N/A	N/A	N/A	N/A	N/A
000000200643	WCEOCCDX006KALS9OF	State Electric Supply	OCC	DX006KALS9OP	26121634	FIBER OPTIC CABLE 6-STRAND I/O PLENUM RATED MULTIMODE 50/125 OCC PART # DX006-045K-ALS/900-OFNP OR CORNING PART # 006C8P-31131-29 OR EQUAL		EA	$0.50	3000	$1,500.00		N/A	N/A	N/A	N/A	N/A	N/A	N/A	N/A	N/A
000000200644	WCEOCCDX006DALS9OF	State Electric Supply	OCC	DX006DALS9ORI2	26121634	FIBER OPTIC CABLE 6-STRAND I/O 50UM MULTIMODE ARMORED OCC PART # DX06-055D-ALS/900-OFCR-IAD OR CORNING PART # 006C8F-31131-A1 OR EQUAL		EA	$1.14	1000	$1,140.00		N/A	N/A	N/A	N/A	N/A	N/A	N/A	N/A	N/A
000000200645	WCEOCCDX006KALS9OF	State Electric Supply	OCC	DX006KALS9OPI6	26121634	FIBER OPTIC CABLE 6-STRAND INDOOR/OUTDOOR ARMORED PLENUM COATED 50UM MULTIMODE OCC PART # DX06-050K-ALS/900-OFCP-IAK OR CORNING PART # 006C8P-31131-A3 OR EQUAL		EA	$2.65	1000	$2,650.00		N/A	N/A	N/A	N/A	N/A	N/A	N/A	N/A	N/A
000000200646	WCEOCCDX024DSLX9KR	State Electric Supply	OCC	DX024DSLX9KR	26121634	FIBER OPTIC CABLE 24-STRAND I/O SINGLEMODE 9/125 OCC PART # DX24-085D-SLX/900-OFNR-WB OR CORNING PART # 024E8F-31131-24 OR EQUAL		EA	$0.81	500	$405.00		N/A	N/A	N/A	N/A	N/A	N/A	N/A	N/A	N/A
000000200647	WCEOCCDX012DSLX9KR	State Electric Supply	OCC	DX012DSLX9KR	26121634	FIBER OPTIC CABLE 12-STRAND I/O SINGLEMODE 9/125 OCC PART # DX12-065D-SLX/900-OFNR-WB OR CORNING PART # 012E8F-31131-24 OR EQUAL		EA	$0.44	1000	$440.00										
000000200648	WCEOCCDX006DSLX9KR	State Electric Supply	OCC	DX006DSLX9KR	26121634	FIBER OPTIC CABLE 6-STRAND I/O SINGLEMODE 9/125 OCC PART # DX06-055D-SLX/900-OFNR-WB OR CORNING PART # 006E8F-31131-24 OR EQUAL		EA	$0.26	4000	$1,040.00		N/A	N/A	N/A	N/A	N/A	N/A	N/A	N/A	N/A
000000200649	WCEOCCDX024KSLX9YP	State Electric Supply	OCC	DX024KSLX9YP	26121634	FIBER OPTIC CABLE 24-STRAND I/O PLENUM RATED SINGLEMODE 9/125 OCC PART # DX24-070K-SLX/900-OFNP-WB OR CORNING PART # 024E8P-31131-29 OR EQUAL		EA	$1.33	1000	$1,330.00		N/A	N/A	N/A	N/A	N/A	N/A	N/A	N/A	N/A
000000200650	WCEOCCDX012KSLX9YP	State Electric Supply	OCC	DX012KSLX9YP	26121634	FIBER OPTIC CABLE 12-STRAND I/O PLENUM RATED SINGLEMODE 9/125 OCC PART # DX12-060K-SLX/900-OFNP-WB OR CORNING PART # 012E8P-31131-29 OR EQUAL		EA	$0.71	1000	$710.00		N/A	N/A	N/A	N/A	N/A	N/A	N/A	N/A	N/A

000000200651	WCEOCCDX006KSL9YP	State Electric Supply	OCC	DX006KSLX9YP	26121634	FIBER OPTIC CABLE 6-STRAND I/O PLENUM RATED SINGLEMODE 9/125 OCC PART # DX06-045K-SLX/900-OFNP-WB OR CORNING PART # 006E8P-31131-29 OR EQUAL		EA	$0.42	1000	$420.00		N/A	N/A	N/A	N/A	N/A	N/A	N/A	N/A	N/A
000000200652	WCEOCCDX024DSLX9YR	State Electric Supply	OCC	DX024DSLX9YRI2	26121634	FIBER OPTIC CABLE 24-STRAND I/O ARMORED SINGLEMODE 9/125 OCC PART # DX24-085D-SLX/900-OFCR-IAD OR CORNING PART # 024E8F-31131-A1 OR		EA	$1.56	1000	$1,560.00		N/A	N/A	N/A	N/A	N/A	N/A	N/A	N/A	N/A
000000200653	WCEOCCDX012DSLX9YR	State Electric Supply	OCC	DX012DSLX9YRI2	26121634	FIBER OPTIC CABLE 12-STRAND I/O ARMORED SINGLEMODE 9/125 OCC PART # DX12-070D-SLX/900-OFCR-IAD OR CORNING PART # 012E8F-31131-A1 OR EQUAL		EA	$1.17	1000	$1,170.00		N/A	N/A	N/A	N/A	N/A	N/A	N/A	N/A	N/A
000000200654	WCEOCCDX006DSLX9YR	State Electric Supply	OCC	DX006DSLX9YRI2	26121634	FIBER OPTIC CABLE 6-STRAND I/O ARMORED SINGLEMODE 9/125 OCC PART # DX06-060D-SLX/900-OFCR-IAD OR CORNING PART # 006E8F-31131-A1 OR EQUAL		EA	$0.91	1000	$910.00		N/A	N/A	N/A	N/A	N/A	N/A	N/A	N/A	N/A
000000200655	WCEOCCDX024KSLX9YP	State Electric Supply	OCC	DX024KSLX9YPI6	26121634	FIBER OPTIC CABLE 24-STRAND I/O ARMORED PLENUM RATED SINGLEMODE 9/125 OCC PART # DX24-070K-SLX/900-OFCP-IAK OR CORNING PART # 024E8P-31131-A3 OR EQUAL		EA	$2.76	1000	$2,760.00		N/A	N/A	N/A	N/A	N/A	N/A	N/A	N/A	N/A
000000200656	WCEOCCDX012KSLX9YP	State Electric Supply	OCC	DX012KSLX9YPI6	26121634	FIBER OPTIC CABLE 12-STRAND I/O ARMORED PLENUM RATED SINGLEMODE 9/125 OCC PART # DX12-060K-SLX/900-OFCP-IAK OR CORNING PART # 012E8P-31131-A3 OR EQUAL		EA	$2.00	1000	$2,000.00		N/A	N/A	N/A	N/A	N/A	N/A	N/A	N/A	N/A
000000200657	WCEOCCDX006KSLX9YP	State Electric Supply	OCC	DX006KSLX9YPI6	26121634	FIBER OPTIC CABLE 6-STRAND I/O ARMORED PLENUM RATED SINGLEMODE 9/125 OCC PART # DX06-050K-SLX/900-OFCP-IAK OR CORNING PART # 006E8P-31131-A3 OR EQUAL		EA	$1.93	1000	$1,930.00		N/A	N/A	N/A	N/A	N/A	N/A	N/A	N/A	N/A
000000200658	MLK10-4323	State Electric Supply	Multilink	10-4323	26121634	MULTILINK 1U RACKMOUNT FIBER ENCLOSURE MULTILINK PART# FRM-1RU-2X-SO OR EQUAL		EA	$65.00	40	$2,600.00		N/A	N/A	N/A	N/A	N/A	N/A	N/A	N/A	N/A
000000200659	MLK10-4327	State Electric Supply	Multilink	10-4327	26121634	MULTILINK 2U RACKMOUNT FIBER ENCLOSURE MULTILINK PART# FRM-2RU-4X-SO OR EQUAL		EA	$88.00	20	$1,760.00		N/A	N/A	N/A	N/A	N/A	N/A	N/A	N/A	N/A
000000200660	MLK045-799-10	State Electric Supply	Multilink	045-799-10	26121634	MULTILINK 3U RACKMOUNT FIBER ENCLOSURE MULTILINK PART# FRM-3RU-9X-TS OR EQUAL		EA	$156.00	20	$3,120.00		N/A	N/A	N/A	N/A	N/A	N/A	N/A	N/A	N/A
000000200661	MLK10-7666	State Electric Supply	Multilink	10-7666	26121634	MULTILINK BLANK MODULE; FITS RACK MOUNT ENCLOSURES MULTILINK PART # MFMB-600BB-BLK OR EQUAL		EA	$3.00	20	$60.00		N/A	N/A	N/A	N/A	N/A	N/A	N/A	N/A	N/A
000000200662	LEV5R1UL-F03	State Electric Supply	Leviton	5R1UL-F03	26121634	1U RACKMOUNT FIBER ENCLOSURE LEVITON PART# 5R1UA-A03 OR EQUAL		EA	$60.00	20	$1,200.00		N/A	N/A	N/A	N/A	N/A	N/A	N/A	N/A	N/A
000000200663	LEV5R2UL-F06	State Electric Supply	Leviton	5R2UL-F06	26121634	2U RACKMOUNT FIBER ENCLOSURE LEVITON PART# 5R2UA-A06 OR EQUAL		EA	$78.00	20	$1,560.00		N/A	N/A	N/A	N/A	N/A	N/A	N/A	N/A	N/A
000000200664	LEV5R3UL-F12	State Electric Supply	Leviton	5R3UL-F12	26121634	3U RACKMOUNT FIBER ENCLOSURE LEVITON PART# 5R3UA-A12 OR EQUAL		EA	$102.00	20	$2,040.00		N/A	N/A	N/A	N/A	N/A	N/A	N/A	N/A	N/A
000000200665	LEV5W110-00N	State Electric Supply	Leviton	5W110-00N	26121634	SMALL EMPTY FIBER WALL MOUNT ENCLOSURE ONLY 8"HIGH X 13"WIDE X 3.5"DEEP LEVITON PART# 5W110-00N OR EQUAL		EA	$53.00	20	$1,060.00		N/A	N/A	N/A	N/A	N/A	N/A	N/A	N/A	N/A
000000200666	Q-T852-L42-003	State Electric Supply	Quiktron	852-L42-003	26121634	DUPLEX FIBER OPTIC JUMPERS, 50/125 1 METER LC TO SC		EA	$3.85	100	$385.00		N/A	N/A	N/A	N/A	N/A	N/A	N/A	N/A	N/A
000000200667	Q-T852-LL2-003	State Electric Supply	Quiktron	852-LL2-003	26121634	DUPLEX FIBER OPTIC JUMPERS, 50/125 1 METER LC TO LC		EA	$4.15	100	$415.00		N/A	N/A	N/A	N/A	N/A	N/A	N/A	N/A	N/A
000000200668	Q-T853-042-003	State Electric Supply	Quiktron	853-042-003	26121634	DUPLEX FIBER OPTIC JUMPERS, 50/125 1 METER SC TO MTRJ		EA	$3.75	100	$375.00		N/A	N/A	N/A	N/A	N/A	N/A	N/A	N/A	N/A
000000200669	Q-T853-0L2-003	State Electric Supply	Quiktron	853-0L2-003	26121634	DUPLEX FIBER OPTIC JUMPERS, 50/125 1 METER LC TO MTRJ		EA	$3.85	100	$385.00		N/A	N/A	N/A	N/A	N/A	N/A	N/A	N/A	N/A
000000200670	Q-T852-L42-006	State Electric Supply	Quiktron	852-L42-006	26121634	DUPLEX FIBER OPTIC JUMPERS, 50/125 2 METER LC TO SC		EA	$4.45	100	$445.00		N/A	N/A	N/A	N/A	N/A	N/A	N/A	N/A	N/A
000000200671	Q-T852-LL2-006	State Electric Supply	Quiktron	852-LL2-006	26121634	DUPLEX FIBER OPTIC JUMPERS, 50/125 2 METER LC TO LC		EA	$4.70	100	$470.00		N/A	N/A	N/A	N/A	N/A	N/A	N/A	N/A	N/A
000000200672	Q-T853-042-006	State Electric Supply	Quiktron	853-042-006	26121634	DUPLEX FIBER OPTIC JUMPERS, 50/125 2 METER SC TO MTRJ		EA	$4.30	100	$430.00		N/A	N/A	N/A	N/A	N/A	N/A	N/A	N/A	N/A
000000200673	Q-T853-0L2-006	State Electric Supply	Quiktron	853-0L2-006	26121634	DUPLEX FIBER OPTIC JUMPERS, 50/125 2 METER LC TO MTRJ		EA	$4.45	100	$445.00		N/A	N/A	N/A	N/A	N/A	N/A	N/A	N/A	N/A
000000200674	Q-T852-LL2-009	State Electric Supply	Quiktron	852-LL2-009	26121634	DUPLEX FIBER OPTIC JUMPERS, 50/125 3 METER LC TO LC		EA	$5.29	100	$529.00										
000000200675	Q-T810-L47-003	State Electric Supply	Quiktron	810-L47-003	26121634	DUPLEX FIBER OPTIC JUMPERS, 9/125 1 METER LC TO SC		EA	$4.15	100	$415.00										
000000200676	Q-T810-LL7-003	State Electric Supply	Quiktron	810-LL7-003	26121634	DUPLEX FIBER OPTIC JUMPERS, 9/125 1 METER LC TO LC		EA	$4.40	100	$440.00		N/A	N/A	N/A	N/A	N/A	N/A	N/A	N/A	N/A
000000200677	Q-T810-L47-006	State Electric Supply	Quiktron	810-L47-006	26121634	DUPLEX FIBER OPTIC JUMPERS, 9/125 2 METER LC TO SC		EA	$4.35	100	$435.00		N/A	N/A	N/A	N/A	N/A	N/A	N/A	N/A	N/A
000000200678	Q-T810-LL7-006	State Electric Supply	Quiktron	810-LL7-006	26121634	DUPLEX FIBER OPTIC JUMPERS, 9/125 2 METER LC TO LC		EA	$4.70	100	$470.00		N/A	N/A	N/A	N/A	N/A	N/A	N/A	N/A	N/A
000000200679	Q-T810-L47-009	State Electric Supply	Quiktron	810-L47-009	26121634	DUPLEX FIBER OPTIC JUMPERS, 9/125 3 METER LC TO SC		EA	$4.65	100	$465.00		N/A	N/A	N/A	N/A	N/A	N/A	N/A	N/A	N/A
000000200680	Q-T810-LL7-009	State Electric Supply	Quiktron	810-LL7-009	26121634	DUPLEX FIBER OPTIC JUMPERS, 9/125 3 METER LC TO LC		EA	$4.95	100	$495.00		N/A	N/A	N/A	N/A	N/A	N/A	N/A	N/A	N/A
000000200681	MHN506519	State Electric Supply	IC Intellinet	506519	26121634	ETHERNET 10BASE-T TO 10BASE-FL STAND-ALONE MEDIA CONVERTER; TRANSITION NETWORKS PART# E-TBT-FRL-05 OR EQUAL		EA	$42.55	10	$425.50		N/A	N/A	N/A	N/A	N/A	N/A	N/A	N/A	N/A
000000200682	MHN506519	State Electric Supply	IC Intellinet	506519	26121634	FAST ETHERNET 100BASE-TX TO 100BASE-FX STAND-ALONE MEDIA CONVERTER; TRANSITION NETWORKS PART# E-100BTX-FX-05 OR EQUAL		EA	$42.55	10	$425.50		N/A	N/A	N/A	N/A	N/A	N/A	N/A	N/A	N/A
000000200683	Q-T852-LL2-017-55L	State Electric Supply	Quiktron	852-LL2-017-55L	26121634	5 METER OM4 DUPLEX FIBER OPTIC JUMPER		EA	$7.80	50	$390.00		N/A	N/A	N/A	N/A	N/A	N/A	N/A	N/A	N/A
000000200684	Q-T852-LL2-033-55L	State Electric Supply	Quiktron	852-LL2-033-55L	26121634	10 METER OM4 DUPLEX FIBER OPTIC JUMPER		EA	$12.25	100	$1,225.00		N/A	N/A	N/A	N/A	N/A	N/A	N/A	N/A	N/A
000000200685	Q-T852-LL2-050-55L	State Electric Supply	Quiktron	852-LL2-050-55L	26121634	15 METER OM4 DUPLEX FIBER OPTIC JUMPER		EA	$16.40	100	$1,640.00		N/A	N/A	N/A	N/A	N/A	N/A	N/A	N/A	N/A
000000200686	Q-T810-LL7-017	State Electric Supply	Quiktron	810-LL7-017	26121634	5 METER SINGLE MODE DUPLEX FIBER OPTIC JUMPER		EA	$5.45	100	$545.00		N/A	N/A	N/A	N/A	N/A	N/A	N/A	N/A	N/A
000000200687	Q-T810-LL7-033	State Electric Supply	Quiktron	810-LL7-033	26121634	10 METER SINGLEMODE DUPLEX FIBER OPTIC JUMPER		EA	$6.65	100	$665.00		N/A	N/A	N/A	N/A	N/A	N/A	N/A	N/A	N/A
000000200688	Q-T810-LL7-050	State Electric Supply	Quiktron	810-LL7-050	26121634	15 METER SINGLEMODE DUPLEX FIBER OPTIC JUMPER		EA	$8.25	100	$825.00		N/A	N/A	N/A	N/A	N/A	N/A	N/A	N/A	N/A
000000200689	MLK70506K	State Electric Supply	Multilink	70506K	26121634	2000 MULTILINK SSTA SPLICE TRAYS		EA	$20.00	100	$2,000.00		N/A	N/A	N/A	N/A	N/A	N/A	N/A	N/A	N/A
000000200690	MLK70902K	State Electric Supply	Multilink	70902K	26121634	1120 MULTILINK SSTA SPLICE TRAYS		EA	$14.25	100	$1,425.00		N/A	N/A	N/A	N/A	N/A	N/A	N/A	N/A	N/A
000000200691	MLK065-245-10	State Electric Supply	Multilink	065-245-10	26121634	MLCDG-12-MM-P-BLK - 12 PORT LC CONNECTOR PANEL MM		EA	$23.00	50	$1,150.00		N/A	N/A	N/A	N/A	N/A	N/A	N/A	N/A	N/A
000000200692	MLK065-246-10	State Electric Supply	Multilink	065-245-10	26121634	MLCQG-24MM-P-BLK - 24 PORT LC CONNECTOR PANEL MM		EA	$41.00	20	$820.00		N/A	N/A	N/A	N/A	N/A	N/A	N/A	N/A	N/A
000000200693	MLK10-9709	State Electric Supply	Multilink	10-9709	26121634	MLCD-12-SM-C-BLK - 12 PORT LC CONNECTOR PANEL SM		EA	$40.00	20	$800.00		N/A	N/A	N/A	N/A	N/A	N/A	N/A	N/A	N/A
000000200694	MLK065-244-10	State Electric Supply	Multilink	065-244-10	26121634	MLCQ-24-SM-C-BLK - 24 PORT LC CONNECTOR PANEL SM		EA	$66.00	20	$1,320.00		N/A	N/A	N/A	N/A	N/A	N/A	N/A	N/A	N/A
000000200695	MLK065-815-10	State Electric Supply	Multilink	065-815-10	26121634	1-3 METER OM4 LC 6 STRAND FIBER PIGTAILS		EA	$41.00	100	$4,100.00		N/A	N/A	N/A	N/A	N/A	N/A	N/A	N/A	N/A
000000200696	MLK065-487-10	State Electric Supply	Multilink	065-487-10	26121634	1-3 METER OM4 LC 12 STRAND FIBER PIGTAILS		EA	$68.50	100	$6,850.00		N/A	N/A	N/A	N/A	N/A	N/A	N/A	N/A	N/A
000000200697	MLK065-XXX-10	State Electric Supply	Multilink	065-XXX-10	26121634	1-3 METER OM4 LC 24 STRAND FIBER PIGTAILS		EA	$105.75	100	$10,575.00		N/A	N/A	N/A	N/A	N/A	N/A	N/A	N/A	N/A
000000200698	MLK065-809-10	State Electric Supply	Multilink	065-809-10	26121634	1-3 METER SM LC 6 STRAND FIBER PIGTAILS		EA	$30.50	100	$3,050.00		N/A	N/A	N/A	N/A	N/A	N/A	N/A	N/A	N/A
000000200699	MLK065-396-10	State Electric Supply	Multilink	065-396-10	26121634	1-3 METER SM LC 12 STRAND FIBER PIGTAILS		EA	$48.40	100	$4,840.00		N/A	N/A	N/A	N/A	N/A	N/A	N/A	N/A	N/A
000000200700	MLK065-853-10	State Electric Supply	Multilink	065-853-10	26121634	1-3 METER SM LC 24 STRAND FIBER PIGTAILS		EA	$122.00	100	$12,200.00		N/A	N/A	N/A	N/A	N/A	N/A	N/A	N/A	N/A
000000200701	LEVFSSSD-60	State Electric Supply	Leviton	FSSSD-60	26121634	50 PIECE PACK OF SPLICE SLEEVES - 60 MILLIMETER		PK	$12.25	100	$1,225.00		N/A	N/A	N/A	N/A	N/A	N/A	N/A	N/A	N/A

TOTAL: $277,999.02

2-POST OPEN FRAME RACK

Two-Post Rack with shelves

Populated Two-Post Rack with vertical cable management

INDUSTRY STANDARDS

UL 2416 Listed; File No. E230874
cUL Listed per CSA C22.2 No. 182.4; File No. E230874

EIA 310-D

APPLICATION

Designed for use in network, server, and telecommunication rooms, 2-Post Open Frame Racks satisfy basic functional requirements for structuring cable. Racks are available in 3-in. or 6-in. column widths.

FEATURES

- Range of heights from 4 ft. to 9 ft. (24U to 58U) to match capacity requirements; 19-in. Rack Packages are 7-ft. high
- Side rails are tapped on both sides with 12-24UNC threads for quick installation
- EIA Universal 5/8 in. - 5/8 in. - 1/2 in. vertical mounting hole pattern matches industry standards
- RU markings on both front and back of uprights make it easier to mount equipment
- Packed unassembled in individual cartons; assembly hardware (including twenty 12-24 mounting screws) is furnished for convenient storage and installation
- Convenient rack and cable manager packages offered with either one or two 6-in. cable managers; includes one-piece hinged cover

SPECIFICATIONS

- Frame is a strong and lightweight aluminum (6063-T6 alloy), extruded or formed, with RU markings on both front and back of uprights

FINISH

RAL 9005 black polyester powder paint or milled aluminum

LOAD RATING

Do not exceed the following recommended load ratings.

Floor Mount Rack - 1000 lb. (453.6 kg)
One-Sided Solid Shelf - 150 lb. (68.0 kg)
Double-Sided Shelf - 300 lb. (136.1 kg)
One-Sided Vented Shelf - 150 lb. (68.0 kg)
Double-Sided Vented Shelf - 300 lb. (136.1 kg)
Adjustable Vented Shelf - 60 lb. (27.2 kg)
Keyboard/Monitor Shelf - 200 lb. (90.7 kg)

BULLETIN: DMAX, DOFR2

Standard Product **3-in. Column**

Catalog Number	AxBxC in.	AxBxC mm	Description	Finish	Rack Units	Nominal Frame Height
EDR19FM24U	48.00 x 20.25 x 15.00	1219 x 514 x 381	19-in. rack	Black	24	4 ft.
EDR19FM38U	72.00 x 20.25 x 15.00	1829 x 514 x 381	19-in. rack	Black	38	6 ft.
EDR19FM45U	84.00 x 20.25 x 15.00	2134 x 514 x 381	19-in. rack	Black	45	7 ft.
EVR19FM45U	84.00 x 20.25 x 15.00	2134 x 514 x 381	19-in. rack	Mill	45	7 ft.
EDR19FM51U	96.00 x 20.25 x 15.00	2438 x 514 x 381	19-in. rack	Black	51	8 ft.
EVR19FM51U	96.00 x 20.25 x 15.00	2438 x 514 x 381	19-in. rack	Mill	51	8 ft.
EDR19FM58U	108.00 x 20.25 x 15.00	2743 x 514 x 381	19-in. rack	Black	58	9 ft.
EVR19FM58U	108.00 x 20.25 x 15.00	2743 x 514 x 381	19-in. rack	Mill	58	9 ft.
EDR23FM24U	48.00 x 24.25 x 15.00	1219 x 616 x 381	23-in. rack	Black	24	4 ft.
EDR23FM38U	72.00 x 24.25 x 15.00	1829 x 616 x 381	23-in. rack	Black	38	6 ft.
EDR23FM45U	84.00 x 24.25 x 15.00	2134 x 616 x 381	23-in. rack	Black	45	7 ft.
EVR23FM45U	84.00 x 24.25 x 15.00	2134 x 616 x 381	23-in. rack	Mill	45	7 ft.
EDR23FM51U	96.00 x 24.25 x 15.00	2438 x 616 x 381	23-in. rack	Black	51	8 ft.
EVR23FM51U	96.00 x 24.25 x 15.00	2438 x 616 x 381	23-in. rack	Mill	51	8 ft.

Standard Product **3-in. Column with Cable Manager**

Catalog Number	AxBxC in.	AxBxC mm	Description	Finish	Rack Units	Nominal Frame Height
EDR19FM45UCM1	84.00 x 27.50 x 18.00	2134 x 699 x 457	19-in. rack package, 1 cable manager, DV6D7	Black	45	7 ft.
EDR19FM45UCM2	84.00 x 34.75 x 18.00	2134 x 883 x 457	19-in. rack package, 2 cable managers, DV6D7/	Black	45	7 ft.

Standard Product **6-in. Column**

Catalog Number	AxBxC in.	AxBxC mm	Description	Finish	Rack Units	Nominal Frame Height
EDR19FM45U6	84.00 x 20.28 x 18.00	2134 x 515 x 457	19-in. rack	Black	45	7 ft.
EDR19FM51U6	96.00 x 20.28 x 18.00	2438 x 515 x 457	19-in. rack	Black	51	8 ft.

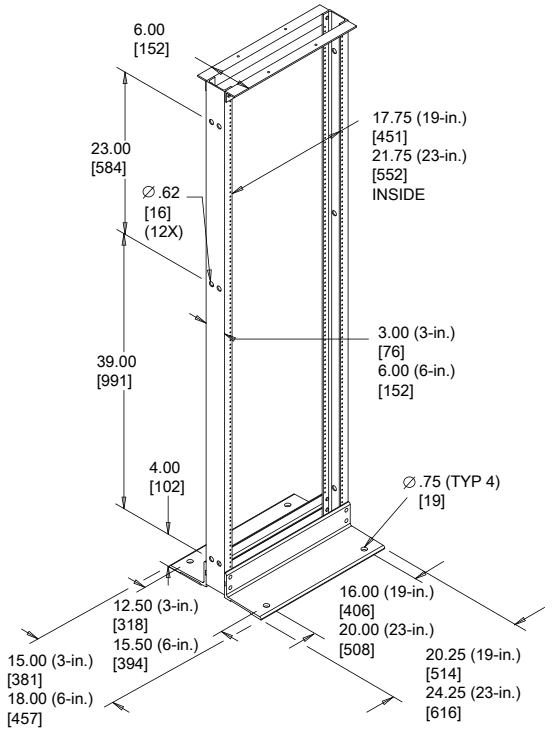

2-Post Rack Package
(CABLETEK Vertical Cable Managers shown with alternate mounting location)

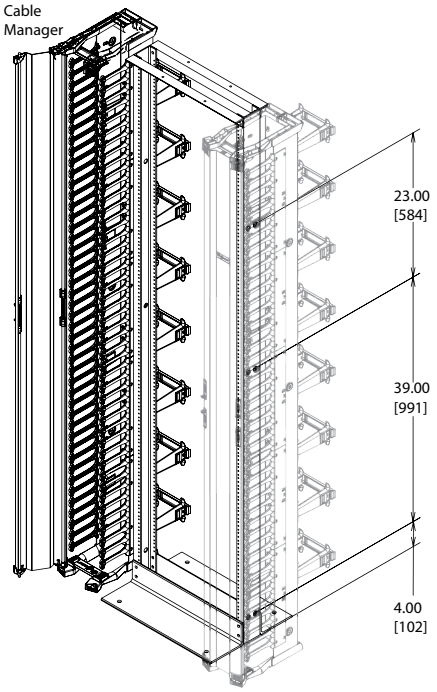

19-in. Shelf Depths

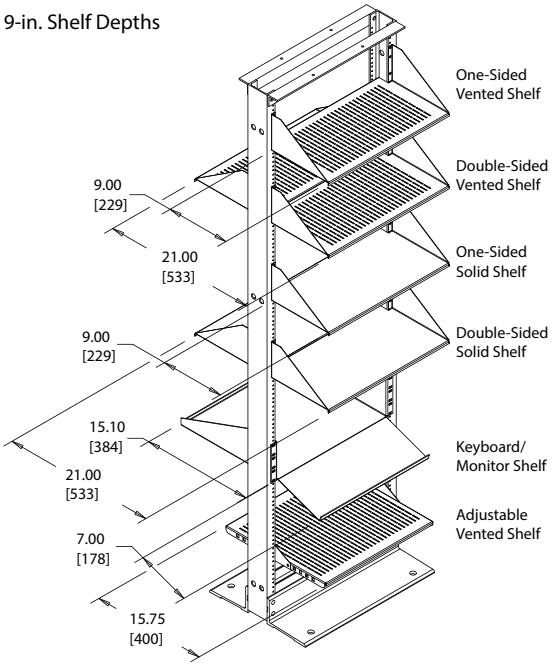

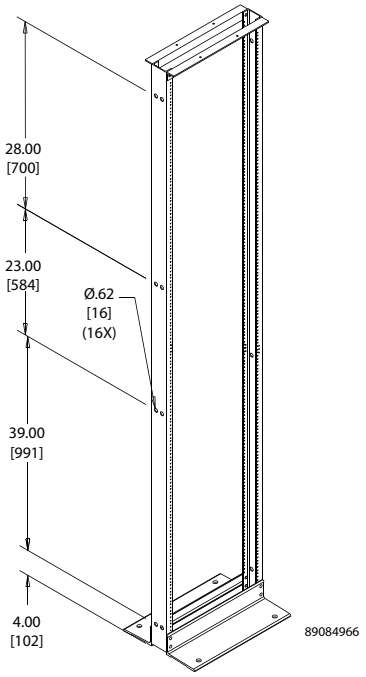

8-Foot and 9-Foot Racks Only
(Width and Depth dimensions identical to 7-foot rack

2-POST OPEN FRAME RACK HARDWARE KIT

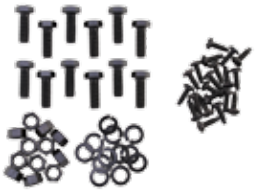

Kit consists of (12) 3/8-16x1.00 hex head screws; (12) 3/8 split washers; and (12) 3/8-16 hex nuts.

BULLETIN: DOFRY

Standard Product

Catalog Number	Description
E2PKIT	2-Post Open Frame Rack hardware kit

CONCRETE EXPANSION BOLT ANCHOR KIT

BULLETIN: DACCY

Standard Product

Catalog Number	Description
ESBDK	(4) 3/8x3.75 expansion bolt kit

Notes

Fast Ethernet Media Converter

10/100Base-TX to 100Base-FX (ST) Multi-Mode, 2 km (1.24 mi)

Part No.: 506519

The Intellinet Network Solutions Fast Ethernet Media Converter was specifically designed to offer the network designer a device for migration from copper-based Ethernet to Fiber Ethernet. Now migration or expansion of existing networks can be achieved with minimum cost and complexity. The converter is completely transparent to the network so the network performs exactly the way it did before – only now it can support both copper and fiber mediums.

Expands the Size of an Existing Network

Provides fiber connectivity to Ethernet segments, allowing for even further networking expansion between extended workgroups. Also provides building-to-building connectivity without the need for the cost and disruption associated with the installation of additional routers.

Enhances the Distance between Networking Devices

Connecting the converter to fiber segments can further extend distances between networking nodes. This can be achieved by direct connection between the converter and a fiber-based node or networking device.

Cabling Flexibility

Network managers can install fiber cabling anywhere within a network without changing the arrangement of copper-based Ethernet. The compact size of the converter allows it to be easily deployed in any narrow desktop location or to be used in a wall-mount installation. Several converters can be simultaneously installed into a 19" rack-mountable chassis.

Features:

- Data transfer rate: 100 Mbps
- One 10/100Base-TX RJ45 port, maximum distance 100 m / 300 ft.
- RJ45 port with Auto MDI/MDI-X support and auto-negotiation
- One 100Base-FX multi-mode Fiber ST duplex port
- Fiber distance support: up to 2 km / 1.24 mi (62.5/125 or 50/125 µm cable)
- Wavelength: 1310 nm
- Flow control
- Status LEDs for power and Link/TX for both ports
- External power adapter, 5 V DC

For more information on Intellinet products, consult your local dealer or visit www.intelllinet-network.com.
All names of products or services mentioned herein are trademarks or registered trademarks of their respective owners. Distribution and reproduction of this document, and use and disclosure of the contents herein, are prohibited unless specifically authorized.

- Functions as a stand-alone converter or can be used with the 14-slot media converter chassis, model 507356
- Three-Year Warranty

Specifications:

Standards
• IEEE 802.3 (Twisted Pair Ethernet)
• IEEE 802.3u (Twisted Pair/Fiber Optic Fast Ethernet)

General
• Media support:
- 100Base-TX Cat3 or higher UTP/STP RJ45, EIA/TIA 568
- 100Base-FX multi-mode 62.5/125 or 50/125 µm Fiber
• Connectors:
- One RJ45 port, 100Base-TX
- One Fiber ST duplex port, 100Base-FX
• Distances:
- 2 km / 1.24 mi (62.5/125 or 50/125 µm fiber cable)
- 100 m / 300 ft (RJ45 cable)
• Wavelength: 1310 nm
• Min. TX power: -22 dBm
• Max. TX power: -12 dBm
• RX sensitivity: -30 dBm
• Signal loss: 2 dB/km
• Certifications: FCC Class B, CE

LEDs
• Power
• LINK/ACT for RJ45 port
• LINK/ACT for Fiber ST port
• 100 Mbps link speed indicator for RJ45 port
• Optical signal input LED
• Full-/half duplex

Power
• External power adapter, 5 VDC, 1 A
• Power consumption: 2.5 watts (maximum)

Environmental
• Metal housing
• Dimensions: 107 (L) x 70 (W) x 26 (H) mm (4.2 x 2.8 x 1.0 in.)
• Weight: 500 g (1.1 lbs.)
• Operating temperature: 0 – 70°C (32 – 158°F)
• Operating humidity: 10 – 90% RH, non-condensing
• Storage temperature: -45 – 80°C (-49 – 176°F)

For more information on Intellinet products, consult your local dealer or visit www.intelllinet-network.com.
All names of products or services mentioned herein are trademarks or registered trademarks of their respective owners. Distribution and reproduction of this document, and use and disclosure of the contents herein, are prohibited unless specifically authorized.

Package Contents
- Fast Ethernet Media Converter
- External power adapter
- User manual

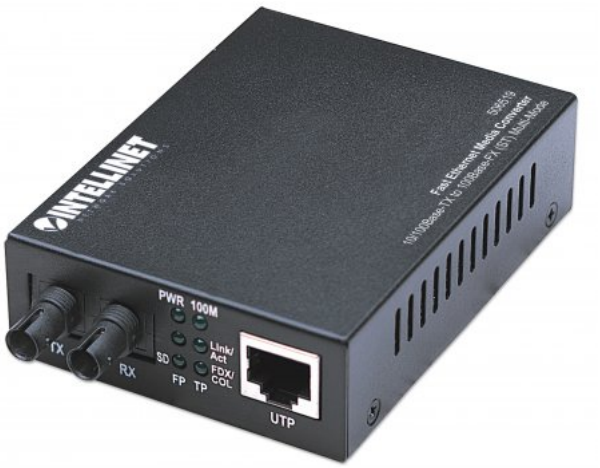

For more information on Intellinet products, consult your local dealer or visit www.intelllinet-network.com.
All names of products or services mentioned herein are trademarks or registered trademarks of their respective owners. Distribution and reproduction of this document, and use and disclosure of the contents herein, are prohibited unless specifically authorized.