West Virginia
Purchasing Division
2019 Washington Street, East
Charleston, WV 25305
Telephone: 304-558-2306
General Fax: 304-558-6026
Bid Fax: 304-558-3970

The following documentation is an electronically-submitted vendor response to an advertised solicitation from the *West Virginia Purchasing Bulletin* within the Vendor Self-Service portal at ***wvOASIS.gov***. As part of the State of West Virginia's procurement process, and to maintain the transparency of the bid-opening process, this documentation submitted online is publicly posted by the West Virginia Purchasing Division at ***WVPurchasing.gov*** with any other vendor responses to this solicitation submitted to the Purchasing Division in hard copy format.

WVOASIS

Jump to: FORMS Go | Home | Personalize | Accessibility | App Help | About

Welcome, Christopher W Seckman

Procurement | Budgeting | Accounts Receivable | Accounts Payable

Solicitation Response(SR) Dept: 0403 ID: ESR07012400000000016 Ver.: 1 Function: New Phase: Final

Modified by batch , 07/23/2024

Header 1

List View

General Information | Contact | Default Values | Discount | Document Information | Clarification Request

Procurement Folder:	1440946
Procurement Type:	Central Purchase Order
Vendor ID:	000000223571
Legal Name:	ADVANTAGE TECHNOLOGY LLC
Alias/DBA:	RICHARD WILBUR III
Total Bid:	$144,556.75
Response Date:	07/01/2024
Response Time:	12:28
Responded By User ID:	aholstein
First Name:	Amanda
Last Name:	Holstein
Email:	aholstein@advantage.tech
Phone:	304-741-8315
SO Doc Code:	CRFQ
SO Dept:	0403
SO Doc ID:	DBS2400000015
Published Date:	7/15/24
Close Date:	7/23/24
Close Time:	13:30
Status:	Closed
Solicitation Description:	WVSDB Security Systems Upgrades
Total of Header Attachments:	1
Total of All Attachments:	1

Department of Administration **Purchasing Division** **2019 Washington Street East** **Post Office Box 50130** **Charleston, WV 25305-0130**	**State of West Virginia** **Solicitation Response**

Proc Folder:	1440946
Solicitation Description:	WVSDB Security Systems Upgrades
Proc Type:	Central Purchase Order

Solicitation Closes	Solicitation Response	Version
2024-07-23 13:30	SR 0403 ESR07012400000000016	1

VENDOR
000000223571 ADVANTAGE TECHNOLOGY LLC

Solicitation Number: CRFQ 0403 DBS2400000015

Total Bid: 144556.75 **Response Date:** 2024-07-01 **Response Time:** 12:28:49

Comments:

FOR INFORMATION CONTACT THE BUYER
Joseph E Hager III
(304) 558-2306
joseph.e.hageriii@wv.gov

Vendor Signature X **FEIN#** **DATE**

All offers subject to all terms and conditions contained in this solicitation

Line	Comm Ln Desc	Qty	Unit Issue	Unit Price	Ln Total Or Contract Amount
1	WVSDB Security Systems Upgrade				144556.75

Comm Code	Manufacturer	Specification	Model #
46171610			

Commodity Line Comments:

Extended Description:

WVSDB Security Systems Upgrade

West Virginia Schools for the Deaf and the Blind

Security Systems Upgrades
Buyer Josh Hager
SOL. No: CRFQ 0403 DBS2400000015
Fax No: 304-558-3970

Bid Response Packet

Submitted by:

advantage
TECHNOLOGY

July 2, 2024, at 1:30 PM

Advantage Technology • 950 Kanawha Blvd E., Suite 100, Charleston, WV 25301 • 304-342-0796

advantage
TECHNOLOGY

950 Kanawha Blvd E., Suite 100
Charleston, WV 25301
304-342-0796

July 1, 2024

WV Dept of Administration
Purchasing Division
2019 Washington Street East
Charleston, WV 25305-0130

Josh Hager:

Advantage Technology is pleased to present this bid package for the WV Schools for the Deaf and the Blind Security Systems Upgrades RFP. Advantage Technology is a respected and established IT company with a reputation for delivering high-quality, high-availability technologies to our customers. We are proud to be a West Virginia company and have been locally owned and operated since 2001.

Advantage Technology has been providing network cabling and networking electronics equipment in schools for the past seven years in association with the WVDE NET Contract. Although security equipment is not specifically in this contract, we have implemented multiple security systems across the State as well as tied existing systems into newly installed networking electronics.

We look forward to continuing working with WV Schools for the Deaf and the Blind on this and any future opportunities.

Todd Fowler
Advantage Technology
K12 Project Manager
304-741-8316

ADDENDUM ACKNOWLEDGEMENT FORM
SOLICITATION NO.:

Instructions: Please acknowledge receipt of all addenda issued with this solicitation by completing this addendum acknowledgment form. Check the box next to each addendum received and sign below. Failure to acknowledge addenda may result in bid disqualification.

Acknowledgment: I hereby acknowledge receipt of the following addenda and have made the necessary revisions to my proposal, plans and/or specification, etc.

Addendum Numbers Received:
(Check the box next to each addendum received)

- ☐ Addendum No. 1
- ☐ Addendum No. 2
- ☐ Addendum No. 3
- ☐ Addendum No. 4
- ☐ Addendum No. 5
- ☐ Addendum No. 6
- ☐ Addendum No. 7
- ☐ Addendum No. 8
- ☐ Addendum No. 9
- ☐ Addendum No. 10

I understand that failure to confirm the receipt of addenda may be cause for rejection of this bid. I further understand that any verbal representation made or assumed to be made during any oral discussion held between Vendor's representatives and any state personnel is not binding. Only the information issued in writing and added to the specifications by an official addendum is binding.

Advantage Technology
Company

Authorized Signature

7-2-2024
Date

NOTE: This addendum acknowledgement should be submitted with the bid to expedite document processing.

GENERAL CONSTRUCTION SPECIFICATIONS

1. **PURPOSE AND SCOPE:** The West Virginia Purchasing Division is soliciting bids on behalf of the West Virginia Schools for the Deaf and the Blind (WVSDB) to establish a contract for a security systems upgrade at WVSDB. McKinley is serving as the Architect on this project.

   The vendor shall furnish all materials, labor, and equipment necessary to complete all Construction Services. The Vendor shall furnish any incidental work, materials, labor, and equipment that are necessary to complete the Construction services, even if such incidental work is not explicitly included in the Project Plan.

2. **DEFINITIONS:** The terms listed below shall have the meanings assigned to them below. Additional definitions can be found in section 2 of the General Terms and Conditions and in the Specification's Manual as defined below.

   2.1 "Construction Services" means removal and installation of a roofing system and related items at WVSDB as more fully described in these specifications and the Specifications/Project Manual.

   2.2 "Pricing Page" means the pages contained in wvOASIS, attached hereto, or included in the Specifications/Project Manual upon which Vendor should list its proposed price for the Construction Services.

   2.3 "Solicitation" means the official notice of an opportunity to supply the State with Construction Services that is published by the Purchasing Division.

   2.4 "Specifications/Project Manual" means the American Institute of Architect forms, specifications, plans, drawings, and related documents developed by the architect, engineer, or Agency that provide detailed instructions on how the Construction Services are to be performed along with any American Institute of Architects documents ("AIA documents") attached thereto.

3. **ORDER OF PRECEDENCE:** This General Construction Specifications document will have priority over, and supersede, anything contained in the Specifications/Project Manual.

4. **QUALIFICATIONS:** Vendor, or Vendor's staff if requirements are inherently limited to individuals rather than corporate entities, shall have the following minimum qualifications:

4.1. Experience: Vendor, or Vendor's supervisory staff assigned to this project, must have successfully completed at least two projects that involved work similar to that described in the Specifications/Project Manual. Compliance with this experience requirement will be determined prior to contract award by the State through references provided by the Vendor upon request, through knowledge or documentation of the Vendor's past projects, through confirmation of experience requirements from the architect assisting the State in this project, or some other method that the State determines to be acceptable. Vendor must provide any documentation requested by the State to assist in confirmation of compliance with this provision. References, documentation, or other information to confirm compliance with this experience requirement may be requested after bid opening and prior to contract award.

5. **CONTRACT AWARD:** The Contract is intended to provide Agency with a purchase price for the Construction Services. The Contract will be awarded to the lowest qualified responsible bidder meeting the required specifications. If the Pricing Pages contain alternates/add-ons, the Contract will be awarded based on the grand total of the base bid and any alternates/add-ons selected.

6. **SELECTION OF ALTERNATES:** Pursuant to W. Va. Code § 5-22-1(f), any solicitation of bids shall include no more than five alternates. Alternates, if accepted, shall be accepted in the order in which they are listed on the bid form. Any unaccepted alternate contained within a bid shall expire 90 days after the date of the opening of bids for review. Determination of the lowest qualified responsible bidder shall be based on the sum of the base bid and any alternates accepted. Alternate selection will be identified in the Purchase Order.

7. **PROGRESS PAYMENTS:** The Vendor will be paid in the form of periodic progress payments for work completed. Payment requests along with documentation supporting the request will be submitted to and reviewed by the Architect. If approved, the Architect will communicate approval to the Owner and Owner will process payment. The Owner reserves the right to withhold liquidated damages from progress payments. Progress payments will be made no more than monthly.

   Approval and payment of progress payments will be based on Contractor's submission of a payment allocation schedule which allocates the entire contract sum to payment milestones. Architect and Owner will review the payment allocation and may mandate changes that they believe are necessary.

8. **RETAINAGE:** Agency is entitled to withhold 10% from each progress payment made as retainage. Agency will partially release retainage upon certification of substantial completion by the Architect in accordance with this Contract but will continue to retain amounts sufficient to cover activities needed to reach final completion.

9. **PERFORMANCE:** Vendor shall perform the Construction Services in accordance with this document and the Specifications/Project Manual.

10. **SUBSTANTIAL AND FINAL COMPLETION:** Vendor can begin work on when a notice to proceed it issued and will have two hundred and seventy (270) days to complete work.

11. **PROJECT PLANS:** Copies of the project plans can be obtained by contacting the entity identified below.

    McKinley Architecture and Engineering:
    Bidders may contact McKinley Architecture and Engineering and request information to access the firm's online files for the project.

Copies of project plans can be examined at the following locations:

Parkersburg/Marietta Contractor's Association
2905 Emerson Avenue
Parkersburg, WV 26104
(304) 484-6485 FAX: (304) 428-7622

Contractor's Association of West Virginia
2114 Kanawha Boulevard East
Charleston, WV 25311
(304) 342-1166 FAX: (304) 342-1074

Pennsylvania Builder's Exchange
1813 North Franklin Street
Pittsburg, PA 15233
(412) 922-4200 FAX: (412) 928-9406

Construction Employer's Association of North Central West Virginia
2794 White Hall Boulevard
White Hall, WV 26554
(304) 367-1290 FAX: (304) 367-0126

McGraw-Hill Dodge Reports
Attn: Scan Department
3315 Central Avenue
Hot Springs, AR 71913-6138
(781) 430-2004

CMD Group
30 Technology Parkway South Suite 100
Norcross, GA 30092

(770) 417-4000 FAX: (800) 317-0870

Ohio Valley Construction Employer's Council
21 Armory Drive
Wheeling, WV 26003
(304) 242-0520 FAX: (304) 242-7261

12. SUBSTITUTIONS: Any substitution requests must be submitted in accordance with the official question and answer period described in the INSTRUCTIONS TO VENDORS SUBMITTING BIDS, Paragraph 4. Vendor Question Deadline.

13. FACILITIES ACCESS: Performance of Contract Services may require access cards and/or keys to gain entrance to Agency's facilities. In the event that access cards and/or keys are required:

13.1. Vendor must identify principal service personnel which will be issued access cards and/or keys to perform service.

13.2. Vendor will be responsible for controlling cards and keys and will pay replacement fee, if the cards or keys become lost or stolen.

13.3. Vendor shall notify Agency immediately of any lost, stolen, or missing card or key.

13.4. Anyone performing under this Contract will be subject to Agency's security protocol and procedures.

13.5. Vendor shall inform all staff of Agency's security protocol and procedures.

14. MISCELLANEOUS:

14.1. Contract Manager: During its performance of this Contract, Vendor must designate and maintain a primary contract manager responsible for overseeing Vendor's responsibilities under this Contract. The Contract manager must be available during normal business hours to address any customer service or other issues related to this Contract. Vendor should list its Contract manager and his or her contact information below.

Contract Manager: ToddFowler
Telephone Number: 304-973-9537
Fax Number: 304-720-1423
Email Address: tfowler@advantage.tech

DESIGNATED CONTACT: Vendor appoints the individual identified in this Section as the Contract Administrator and the initial point of contact for matters relating to this Contract.

(Printed Name and Title) Todd Fowler, Project Manager

(Address) 950 Kanawha Blvd E #100, Charleston, WV 25301

(Phone Number) / (Fax Number) 304-741-8316 / 304-720-1423

(email address) tfowler@advantage.tech

CERTIFICATION AND SIGNATURE: By signing below, or submitting documentation through *wv*OASIS, I certify that: I have reviewed this Solicitation/Contract in its entirety; that I understand the requirements, terms and conditions, and other information contained herein; that this bid, offer or proposal constitutes an offer to the State that cannot be unilaterally withdrawn; that the product or service proposed meets the mandatory requirements contained in the Solicitation/Contract for that product or service, unless otherwise stated herein; that the Vendor accepts the terms and conditions contained in the Solicitation, unless otherwise stated herein; that I am submitting this bid, offer or proposal for review and consideration; that this bid or offer was made without prior understanding, agreement, or connection with any entity submitting a bid or offer for the same material, supplies, equipment or services; that this bid or offer is in all respects fair and without collusion or fraud; that this Contract is accepted or entered into without any prior understanding, agreement, or connection to any other entity that could be considered a violation of law; that I am authorized by the Vendor to execute and submit this bid, offer, or proposal, or any documents related thereto on Vendor's behalf; that I am authorized to bind the vendor in a contractual relationship; and that to the best of my knowledge, the vendor has properly registered with any State agency that may require registration.

By signing below, I further certify that I understand this Contract is subject to the provisions of West Virginia Code § 5A-3-62, which automatically voids certain contract clauses that violate State law; and that pursuant to W. Va. Code 5A-3-63, the entity entering into this contract is prohibited from engaging in a boycott against Israel.

Advantage Technology
(Company)

(Signature of Authorized Representative)

Todd Fowler, Project Manager 7/1/2024
(Printed Name and Title of Authorized Representative) (Date)

304-741-8316 304-720-1423
(Phone Number) (Fax Number)

tfowler@advantage.tech
(Email Address)

CERTIFICATE OF LIABILITY INSURANCE

DATE (MM/DD/YYYY): 06/11/2024

THIS CERTIFICATE IS ISSUED AS A MATTER OF INFORMATION ONLY AND CONFERS NO RIGHTS UPON THE CERTIFICATE HOLDER. THIS CERTIFICATE DOES NOT AFFIRMATIVELY OR NEGATIVELY AMEND, EXTEND OR ALTER THE COVERAGE AFFORDED BY THE POLICIES BELOW. THIS CERTIFICATE OF INSURANCE DOES NOT CONSTITUTE A CONTRACT BETWEEN THE ISSUING INSURER(S), AUTHORIZED REPRESENTATIVE OR PRODUCER, AND THE CERTIFICATE HOLDER.

IMPORTANT: If the certificate holder is an ADDITIONAL INSURED, the policy(ies) must have ADDITIONAL INSURED provisions or be endorsed. If SUBROGATION IS WAIVED, subject to the terms and conditions of the policy, certain policies may require an endorsement. A statement on this certificate does not confer rights to the certificate holder in lieu of such endorsement(s).

PRODUCER
Mountain State Insurance Agency
1206 Kanawha Blvd. E.
Suite 100
Charleston WV 25301-2949

CONTACT NAME: Jennifer Drake
PHONE (A/C, No, Ext): (304) 720-2000 FAX (A/C, No): (304) 720-2002
E-MAIL ADDRESS: jdrake@mountainstateinsurance.com

INSURER(S) AFFORDING COVERAGE	NAIC #
INSURER A : Great Northern Insurance Company	20303
INSURER B : Federal Insurance Company	20281
INSURER C : ACE American Insurance Co	22667
INSURER D :	
INSURER E :	
INSURER F :	

INSURED
Advantage Technology, LLC & Aridea, LLC, DBA: Aridea Solutions
950 Kanawha Blvd. E
Charleston WV 25301

COVERAGES **CERTIFICATE NUMBER:** 23 24 Liab **REVISION NUMBER:**

THIS IS TO CERTIFY THAT THE POLICIES OF INSURANCE LISTED BELOW HAVE BEEN ISSUED TO THE INSURED NAMED ABOVE FOR THE POLICY PERIOD INDICATED. NOTWITHSTANDING ANY REQUIREMENT, TERM OR CONDITION OF ANY CONTRACT OR OTHER DOCUMENT WITH RESPECT TO WHICH THIS CERTIFICATE MAY BE ISSUED OR MAY PERTAIN, THE INSURANCE AFFORDED BY THE POLICIES DESCRIBED HEREIN IS SUBJECT TO ALL THE TERMS, EXCLUSIONS AND CONDITIONS OF SUCH POLICIES. LIMITS SHOWN MAY HAVE BEEN REDUCED BY PAID CLAIMS.

INSR LTR	TYPE OF INSURANCE	ADDL INSD	SUBR WVD	POLICY NUMBER	POLICY EFF (MM/DD/YYYY)	POLICY EXP (MM/DD/YYYY)	LIMITS	
A	[X] COMMERCIAL GENERAL LIABILITY [ ] CLAIMS-MADE [X] OCCUR GEN'L AGGREGATE LIMIT APPLIES PER: [X] POLICY [ ] PRO-JECT [ ] LOC OTHER:			36060996	11/01/2023	11/01/2024	EACH OCCURRENCE	$ 1,000,000
							DAMAGE TO RENTED PREMISES (Ea occurrence)	$ 1,000,000
							MED EXP (Any one person)	$ 10,000
							PERSONAL & ADV INJURY	$ 1,000,000
							GENERAL AGGREGATE	$ 2,000,000
							PRODUCTS - COMP/OP AGG	$ 2,000,000
								$
A	AUTOMOBILE LIABILITY [X] ANY AUTO OWNED AUTOS ONLY [ ] SCHEDULED AUTOS HIRED AUTOS ONLY [ ] NON-OWNED AUTOS ONLY			73617949	11/01/2023	11/01/2024	COMBINED SINGLE LIMIT (Ea accident)	$ 1,000,000
							BODILY INJURY (Per person)	$
							BODILY INJURY (Per accident)	$
							PROPERTY DAMAGE (Per accident)	$
								$
B	[X] UMBRELLA LIAB [ ] OCCUR EXCESS LIAB [ ] CLAIMS-MADE DED RETENTION $			78192586	11/01/2023	11/01/2024	EACH OCCURRENCE	$ 5,000,000
							AGGREGATE	$ 5,000,000
								$
B	WORKERS COMPENSATION AND EMPLOYERS' LIABILITY ANY PROPRIETOR/PARTNER/EXECUTIVE OFFICER/MEMBER EXCLUDED? Y / N [ ] (Mandatory in NH) If yes, describe under DESCRIPTION OF OPERATIONS below	N / A		71764043	11/01/2023	11/01/2024	[X] PER STATUTE [X] OTH-ER	WV Code 23-4-2
							E.L. EACH ACCIDENT	$ 1,000,000
							E.L. DISEASE - EA EMPLOYEE	$ 1,000,000
							E.L. DISEASE - POLICY LIMIT	$ 1,000,000
C	Commercial Cyber and Privacy Liability			D95688615	11/01/2023	11/01/2024	Maximum Policy Deductible	$2,000,000 $50,000

DESCRIPTION OF OPERATIONS / LOCATIONS / VEHICLES (ACORD 101, Additional Remarks Schedule, may be attached if more space is required)

Project: WVSDB Security Systems Upgrades

CERTIFICATE HOLDER

Department of Administration Purchasing Division
2019 Washington St E
Charleston WV 25305

CANCELLATION

SHOULD ANY OF THE ABOVE DESCRIBED POLICIES BE CANCELLED BEFORE THE EXPIRATION DATE THEREOF, NOTICE WILL BE DELIVERED IN ACCORDANCE WITH THE POLICY PROVISIONS.

AUTHORIZED REPRESENTATIVE

© 1988-2015 ACORD CORPORATION. All rights reserved.

The ACORD name and logo are registered marks of ACORD

WEST VIRGINIA
STATE TAX DEPARTMENT
BUSINESS REGISTRATION CERTIFICATE

ISSUED TO:
ADVANTAGE TECHNOLOGY LLC
950 KANAWHA BLVD E 100
CHARLESTON, WV 25301-2842

BUSINESS REGISTRATION ACCOUNT NUMBER: **1003-1086**

This certificate is issued on: **08/29/2017**

This certificate is issued by
the West Virginia State Tax Commissioner
in accordance with Chapter 11, Article 12, of the West Virginia Code

The person or organization identified on this certificate is registered
to conduct business in the State of West Virginia at the location above.

This certificate is not transferrable and must be displayed at the location for which issued

This certificate shall be permanent until cessation of the business for which the certificate of registration was granted or until it is suspended, revoked or cancelled by the Tax Commissioner.

Change in name or change of location shall be considered a cessation of the business and a new certificate shall be required.

TRAVELING/STREET VENDORS: Must carry a copy of this certificate in every vehicle operated by them. CONTRACTORS, DRILLING OPERATORS, TIMBER/LOGGING OPERATIONS: Must have a copy of this certificate displayed at every job site within West Virginia.

atL006 v.4
L0627987136

CONTRACTOR LICENSE

AUTHORIZED BY THE

West Virginia Contractor Licensing Board

NUMBER: WV051250

CLASSIFICATION:

LOW VOLTAGE SYSTEMS
COMMUNICATION & SOUND
CABLE

ADVANTAGE TECHNOLOGY LLC
DBA ADVANTAGE TECHNOLOGY LLC
950 KANAWHA BLVD EAST
CHARELSTON, WV 25301

DATE ISSUED	EXPIRATION DATE
AUGUST 26, 2023	AUGUST 26, 2024

Authorized Signature

Chair, West Virginia Contractor Licensing Board

WEST VIRGINIA CONTRACTOR LICENSING BOARD

A copy of this license must be readily available for inspection by the Board on every job site where contracting work is being performed. This license number must appear in all advertisements, on all bid submissions, and on all fully executed and binding contracts. This license is non-transferable. This license is being issued under the provisions of West Virginia Code, Chapter 30, Article 42.

WV-73
Approved / April 30, 2020

State of West Virginia
DRUG FREE WORKPLACE CONFORMANCE AFFIDAVIT
***West Virginia Code* §21-1D-5**

I, Todd Fowler, after being first duly sworn, depose and state as follows:

1. I am an employee of Advantage Technology, LLC; and,
   (Company Name)

2. I do hereby attest that Advantage Technology, LLC
   (Company Name)

   maintains a written plan for a drug-free workplace policy and that such plan and policy are in compliance with ***West Virginia Code*** §21-1D.

The above statements are sworn to under the penalty of perjury.

Printed Name: Todd Fowler

Signature: [signature]

Title: Project Manager

Company Name: Advantage Technology, LLC

Date: 07-1-2024

STATE OF WEST VIRGINIA,

COUNTY OF Kanawha, TO-WIT:

Taken, subscribed and sworn to before me this 1 day of July, 2024.

By Commission expires May 7, 2025

(Seal)

OFFICIAL SEAL
NOTARY PUBLIC
STATE OF WEST VIRGINIA
ROBIN L. BUSH
423 Crestview Drive
Charleston, WV 25302
My Commission Expires May 7, 2025

Robin L Bush
(Notary Public)

Rev. July 7, 2017

Western Surety Company

POWER OF ATTORNEY APPOINTING INDIVIDUAL ATTORNEY-IN-FACT

Know All Men By These Presents, That WESTERN SURETY COMPANY, a South Dakota corporation, is a duly organized and existing corporation having its principal office in the City of Sioux Falls, and State of South Dakota, and that it does by virtue of the signature and seal herein affixed hereby make, constitute and appoint

Ross E Johnson, Patrick Kee, Beverly A Holstine, Taylor R Johnson, Brady A Campbell, JoAnn Smith, Jennifer Young, Individually

of Charleston, WV, its true and lawful Attorney(s)-in-Fact with full power and authority hereby conferred to sign, seal and execute for and on its behalf bonds, undertakings and other obligatory instruments of similar nature

- In Unlimited Amounts -

and to bind it thereby as fully and to the same extent as if such instruments were signed by a duly authorized officer of the corporation and all the acts of said Attorney, pursuant to the authority hereby given, are hereby ratified and confirmed.

This Power of Attorney is made and executed pursuant to and by authority of the By-Law and Resolutions printed on the reverse hereof, duly adopted, as indicated, by the shareholders of the corporation.

In Witness Whereof, WESTERN SURETY COMPANY has caused these presents to be signed by its Vice President and its corporate seal to be hereto affixed on this 2nd day of May, 2023.

WESTERN SURETY COMPANY

Larry Kasten, Vice President

State of South Dakota
County of Minnehaha } ss

On this 2nd day of May, 2023, before me personally came Larry Kasten, to me known, who, being by me duly sworn, did depose and say: that he resides in the City of Sioux Falls, State of South Dakota; that he is a Vice President of WESTERN SURETY COMPANY described in and which executed the above instrument; that he knows the seal of said corporation; that the seal affixed to the said instrument is such corporate seal; that it was so affixed pursuant to authority given by the Board of Directors of said corporation and that he signed his name thereto pursuant to like authority, and acknowledges same to be the act and deed of said corporation.

My commission expires
March 2, 2026

M. BENT
NOTARY PUBLIC
SOUTH DAKOTA

M. Bent, Notary Public

CERTIFICATE

I, L. Nelson, Assistant Secretary of WESTERN SURETY COMPANY do hereby certify that the Power of Attorney hereinabove set forth is still in force, and further certify that the By-Law and Resolutions of the corporation printed on the reverse hereof is still in force. In testimony whereof I have hereunto subscribed my name and affixed the seal of the said corporation this 02 day of July, 2024

WESTERN SURETY COMPANY

L. Nelson, Assistant Secretary

Form F4280-4-2023

Go to www.cnasurety.com > Owner / Obligee Services > Validate Bond Coverage, if you want to verify bond authenticity.

Agency DBS
REQ.P.O# 2400000015

BID BOND

KNOW ALL MEN BY THESE PRESENTS, That we, the undersigned, Advantage Technology, LLC of 950 Kanawha Boulevard E., Charleston, WV 25301, as Principal, and Western Surety Company of One PPG Place Suite, 2920 Pittsburgh, PA 15222, a corporation organized and existing under the laws of the State of South Dakota with its principal office in the City of Sioux Falls, as Surety, are held and firmly bound unto the State of West Virginia, as Obligee, in the penal sum of Five Percent of Amount Bid ($5% of Amount Bid) for the payment of which, well and truly to be made, we jointly and severally bind ourselves, our heirs, administrators, executors, successors and assigns.

The Condition of the above obligation is such that whereas the Principal has submitted to the Purchasing Section of the Department of Administration a certain bid or proposal, attached hereto and made a part hereof, to enter into a contract in writing for CRFQ 0403 DBS2400000015, WVSDB Security System Upgrades according to plans and specifications.

NOW THEREFORE,

(a) If said bid shall be rejected, or

(b) If said bid shall be accepted and the Principal shall enter into a contract in accordance with the bid or proposal attached hereto and shall furnish any other bonds and insurance required by the bid or proposal, and shall in all other respects perform the agreement created by the acceptance of said bid, then this obligation shall be null and void, otherwise this obligation shall remain in full force and effect. It is expressly understood and agreed that the liability of the Surety for any and all claims hereunder shall, in no event, exceed the penal amount of this obligation as herein stated.

The Surety, for the value received, hereby stipulates and agrees that the obligations of said Surety and its bond shall be in no way impaired or affected by any extension of the time within which the Obligee may accept such bid, and said Surety does hereby waive notice of any such extension.

WITNESS, the following signatures and seals of Principal and Surety, executed and sealed by a proper officer of Principal and Surety, or by Principal individually if Principal is an individual, this 02 day of July, 2024.

Principal Seal

Advantage Technology, LLC
(Name of Principal)

By Brian West
(Must be President, Vice President, or Duly Authorized Agent)

Operations
(Title)

Surety Seal

Western Surety Company
(Name of Surety)

Taylor R. Johnson Attorney-in-Fact

IMPORTANT – Surety executing bonds must be licensed in West Virginia to transact surety insurance, must affix its seal, and must attach a power of attorney with its seal affixed.

West Virginia Schools for the Deaf and the Blind
Security Systems Upgrades
Buyer Josh Hager
SOL. No: CRFQ 0702 DBS2400000015

Cost Proposal

Item	Part Number	Description	Qty	Unit Price	Extended
1.0		**Camera Hardware**			
1.1	MV72X-HW	Meraki Outdoor varifocal dome camera with 512GB of storage	55	595.52	$32,753.60
1.2	MA-MNT-MV-11	Meraki Conduit Back Box	55	44.96	$2,472.80
1.3	MA-MNT-MV-10	Meraki Wall0-Mount Arm MV72	55	113.10	$6,220.50
1.4	LIC-MV-5YR	Meraki MV License – 5 Year	55	473.27	$26,029.85
2.0		**Materials**			
2.1		Cabling Material for Project	1	10,350.00	$10,350.00
3.0		**Labor**			
3.1		Cabling and Camera Installation	1	62,500.00	$62,500.00
3.2		Network Configuration	1	1,260.00	$1,260.00
3.3		Project Management	1	2,970.00	$2,970.00
		Project Total			**$144,556.75**

Subcontractor List Submission (Construction Contracts Only)

Bidder's Name: Advantage Technology LLC

☑ Check this box if no subcontractors will perform more than $25,000.00 of work to complete the project.

Subcontractor Name	License Number if Required by W. Va. Code § 21-11-1 et. seq.

Attach additional pages if necessary

Revised 8/24/2023

WVSDB Security Camera RFP: Optional Switches

Customer

K12
Rep

Logan
SE

6/24/2024
Date Prepared

TBD
Proposed Start Date

Scope/General Description/Purpose of Project

See BOM.

Functional Outcomes

Assumptions

v. 05/26/2023

Line#	Manufacturer	Part Number	Description	Cost	Mark Up	Unit Price	Bid 2	Bid 3	Bid 8	Bid 9	Bid 10	Bid 11	Bid 12	Bid 13	Bid 14	Total Quantity	Sub Total	Distributor	Notes
			Hardware																
1.0	Cisco Meraki	MS120-24P-HW	Meraki MS120-24P 1G L2 Cld -Mngd 24x GigE 370W PoE Switch			$0.00	3	1	1		1	1	1	1	1	10	$0.00		
1.1	Cisco Meraki	LIC-MS120-24P-1YR	Meraki MS120-24P Enterprise License and Support, 1 Year			$0.00	3	1	1		1	1	1	1	1	10	$0.00		
1.2	Cisco Meraki	MS120-8FP-HW	Meraki MS120-8FP 1G L2 Cloud Managed 8x GigE 127W PoE Switch			$0.00				1						1	$0.00		
1.3	Cisco Meraki	LIC-MS120-8FP-1YR	Meraki MS120-8FP Enterprise License and Support, 1 Year			$0.00				1						1	$0.00		
1.4	Cisco Meraki	MA-SFP-1GB-SX	Meraki 1 GbE SFP SX fiber transceiver			$0.00	6	1	1	1	1	1	1	1	1	14	$0.00		
1.5	Cisco Meraki	MA-CBL-TA-1M	Meraki 10 GbE Twinax Cable 1M			$0.00	3	1	1	1	1	1	1	1	1	11	$0.00		
																0	$0.00		
			Labor																
4.4	Advantage	NET3	Network Install	$140.00			9	3	3	3	3	3	3	3	3	33	$4,620.00	Advantage	
			Quote Total													**BOM Total**	**$4,620.00**		

Meraki

DATASHEET

MV72 Cloud-Managed Smart Camera

Overview

The Meraki MV72 series, part of the MV smart camera family, brings physical security and advanced analytics together in a dome form factor suitable for outdoor and demanding deployments. The powerful built-in processor–the same kind found in many of today's smartphones–and innovative architecture minimizes physical infrastructure as well as software requirements. MV72 not only ensures physical safety and security but provides business intelligence, all in a refreshingly simple package.

Bringing security and analytics to demanding environments

As with the rest of the MV lineup, the MV72 series places high-endurance storage locally on the camera, removing the network video recorder (NVR) and video management system (VMS) from the equation. Not only does this drastically simplify both installation and scaling, but it also eliminates a major network security vulnerability in IT infrastructure.

MV72 smart cameras are equipped with an industry-leading processor and have a 4MP sensor for recording in up to 1080p. The processor powers advanced analytics capabilities that previously required specialized software and heavy-duty hardware. Harnessing the power of machine learning for computer vision, MV72 smart cameras can do real-time object detection, classification, and tracking of people and vehicles. This compelling insight lays the foundation for more effective and efficient processes, journey pathing, and safe working practices.

MV72 series cameras are varifocal dome cameras, capable of up to 3x optical zoom. With IP67 and IK10+ rating, they are made to endure a variety of outdoor and other demanding environments. This, combined with an attractive industrial design and easy installation, makes it a natural fit for deployments ranging from school yards to manufacturing, and everything in between.

Product highlights

- Varifocal lens dome camera with 36-112° horizontal FoV
- IK10+ and IP67 rated for impact resistance and ingress protection
- Intelligent motion indexing with search engine
- Built-in motion analytics like motion search, motion recap, and motion heatmaps
- In-camera machine learning capability for intelligent object detection
- No special software or browser plug-ins required
- Cloud-augmented edge storage minimizes physical infrastructure
- Meraki dashboard simplifies operation
- Secure, encrypted control architecture and storage
- Secure boot and signed firmware backed by hardware security chip
- Granular user access controls
- Integrated 802.11ac wireless for easy upgrades from analog
- IR illumination up to 30 m or 98 ft
- Suitable for deployments of all sizes, 1-10,000+ cameras

MV72 specifications

Camera

1/3" 4MP (2688×1520) progressive CMOS image sensor

256GB high-endurance solid-state storage (MV72)

512GB high-endurance solid-state storage (MV72X)

3-9 mm focal length

f/1.2-2.3 aperture

Field of view: horizontal 36-112°, vertical 20-57°, diagonal 42-138°

Lens adjustment range: tilt: 65°, rotation: +/- 90°, pan: 354°

1/30s to 1/32,000s shutter speed

Minimum illumination 0.18 lux (standard recording) and 0.01 lux (night mode)

Built-in IR illuminators, effective up to 30 m (98 ft)

Heating elements

Video

1080p HD video recording (1920×1080) with H.264 encoding up to 20fps (MV72)

4MP recording with H.264 encoding up to 15fps (MV72X)

Cloud-augmented edge storage (locally stored video with metadata in the cloud)

Optimized retention settings (scheduling and motion-based) for variable retention

Up to 90 days (MV72X) of 24/7 continuous video storage per camera*

Direct live streaming with no client software (native browser playback)**

Stream video anywhere with automatic cloud proxy

High dynamic range (HDR)

Audio recording supported with built-in microphone

Networking and wireless

1× 10/100/1000BASE-T Ethernet (RJ45)

DSCP traffic marking

Supported frequency bands (country-specific restrictions apply):

2.4 GHz 802.11b/g/n radio	2.412 - 2.484 GHz
5 GHz 802.11a/n/ac radio	5.150 - 5.250 GHz (UNII-1) 5.250 - 5.350 GHz (UNII-2) 5.470 - 5.600, 5.660 - 5.725 GHz (UNII-2e) 5.725 - 5.825 GHz (UNII-3)

1×1 with one spatial stream

MU-MIMO support	20 and 40 MHz channels (802.11n) 20, 40, and 80 MHz channels (802.11ac)

Up to 256 QAM on both 2.4 GHz and 5 GHz bands

Integrated omni-directional antennas (4.4 dBi gain at 2.4 GHz, 6.3 dBi gain at 5 GHz)

2.4 GHz Bluetooth® low energy radio

*Storage duration dependent on encoding settings and camera storage model

**Browser support for H.264 decoding required

*** The MV72 internal heater will automatically turn on at lower temperatures to preserve normal camera operation

MV72 specifications

Power

Power consumption 25.5W maximum via 802.3at PoE

Environment

Temperature: -40 °C to 50 °C (-40 °F to 122 °F)***

Data and network security

Full disk encryption (AES 256-bit)

Automatically purchased and provisioned TLS certificates (publicly signed)

Management encryption and two-factor authentication

Wireless security:	WPA, WPA2-PSK, WPA2-Enterprise with 802.1X EAP-TTLS TKIP and AES encryption

Physical characteristics

Dimensions 165 mm x 103 mm (diameter x height)

Weight 1,247 g

Female RJ45 Ethernet connector

Multicolor, multifunction status LED

Reset button

External microphone switch

Reset button

Warranty

Five-year hardware warranty with advanced replacement

Ratings

IK10+ vandal resistance

IP67 weather-proofing

*** The MV72 internal heater will automatically turn on at lower temperatures to preserve normal camera operation

Ordering information

Hardware

MV72-HW: Varifocal outdoor dome camera with 256GB Storage

MV72X-HW: Varifocal outdoor dome camera with 512GB Storage

Licensing

LIC-MV-XYR: Meraki MV Enterprise license (X = 1, 3, 5, 7, 10 years)

Accessories

MA-INJ-4-XX: Meraki 802.3at power over Ethernet injector (XX = US, EU, UK, or AU)

MA-PWR-MV-LV: Low voltage 12V DC/24 V AC input PoE injector for MV cameras

In the box

Quick start and installation guide

MV camera hardware

Wall-mounting kit

Notes:

- Each Meraki camera requires a license to operate

To learn more, visit Meraki.com

MV72 (Conduit Back Box + Wall Mount Arm)

You can optionally mount a conduit back box to the wall for simpler installation of MV72 outdoor cameras, and is compatible with the Wall Arm Mount for MV72 Series. The side, top, bottom, or rear ¾" conduit entry allows Ethernet to be securely routed to the camera.

The package contains a one rubber plug to cover the entry that is not being used (on either the side, or the bottom). If more plugs are needed, you can find common ¾" plugs at home improvement stores.

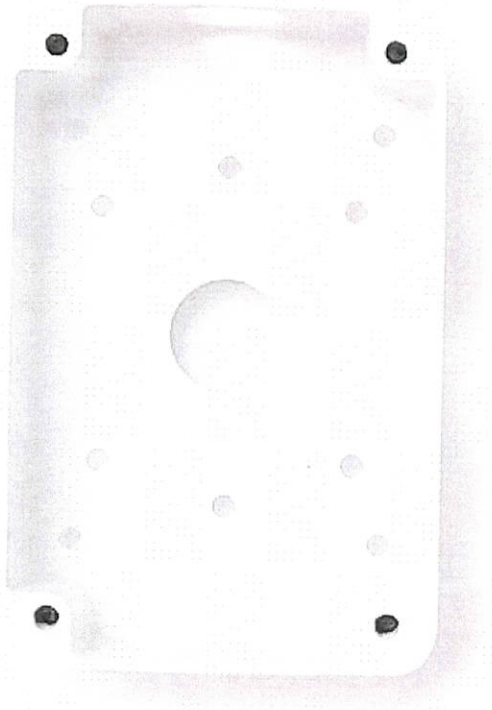

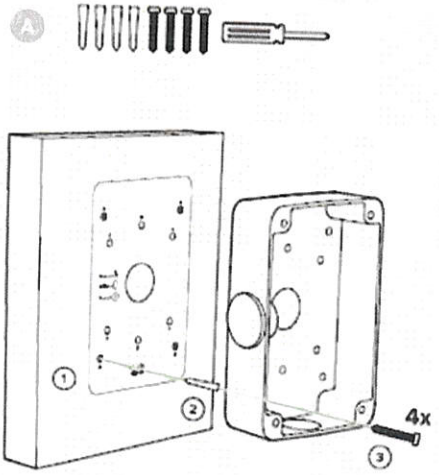
1
2
4x
3

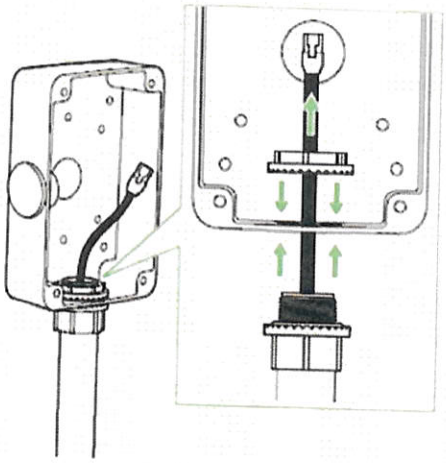

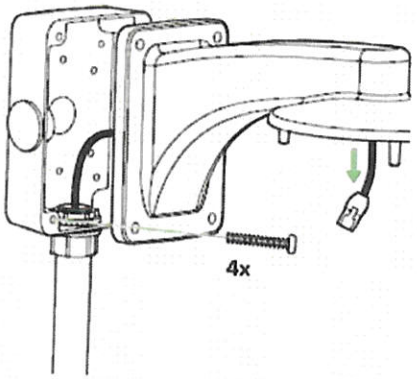
4x